VTOL System

Team :

Snoun Ferid
Grati Elyes
Khelil Souheib
Njeh Oussema

Who We Are:
Team Introduction

GRATI Elyes

NJEH Oussema

SNOUN Ferid

KHELIL Souheib

IIA4

What Is VTOL?

Introduction

VTOL stands for Vertical Take-Off and Landing. Unlike traditional fixed-wing aircraft that require long runways to generate lift, VTOL systems can hover, take off, and land vertically.

This is achieved by orienting thrust vectors upward to overcome gravity (mg) directly. The benchmark described in this document uses two thrust sources (M1 and M2) to manage both lift and roll .

Industrial Interest and Technical Challenges

1. Industrial Interest

- **Operational Flexibility :** VTOL systems eliminate the need for **massive infrastructure** (**runways**), making them ideal for urban air mobility, search and rescue in rugged terrain, and military operations on small ship decks.
- **Efficiency in Transition :** These systems aim to combine the hovering capabilities of a helicopter with the **high-speed** cruise efficiency of an airplane.
- **Precision Logistics :** They are increasingly used in the drone industry for "**last-mile**" delivery and autonomous inspection of industrial sites.

Industrial Interest and Technical Challenges

2.Technical Challenges

- **Strong Input Coupling :** As noted in the references, VTOL systems often suffer from **"Strong Input Coupling"**, where the forces intended for lift also affect the lateral movement and roll, making them difficult to stabilize.
- **Underactuated Dynamics :** The system has fewer control inputs than degrees of freedom, requiring complex **control laws** to maintain balance.
- **Nonlinearities :** Factors such as the angle of thrust and the changing roll angle create nonlinear equations of motion that are sensitive to **external disturbances** like wind.

Derivation of the dynamics

The VTOL dynamics follow directly from **Newton's laws** (mass and inertia normalized to 1):

- **Primary thrust u** acts along the body vertical kb, which resolves in the inertial frame as (−u.sinθ, u.cosθ) .
- **Torque input v** produces the rolling acceleration $\ddot{\theta}$ = v and, due to thruster geometry (α), a small parasitic lateral force ϵ.v along body ib, which resolves as (ϵ.v.cosθ, ϵ.v.sinθ).
- **Gravity** adds (0, −g).

$$\begin{cases} \ddot{x} = -u\sin(\theta) + \varepsilon v\cos(\theta) \\ \ddot{z} = u\cos(\theta) + \varepsilon v\sin(\theta) - g \\ \ddot{\theta} = v \end{cases}$$

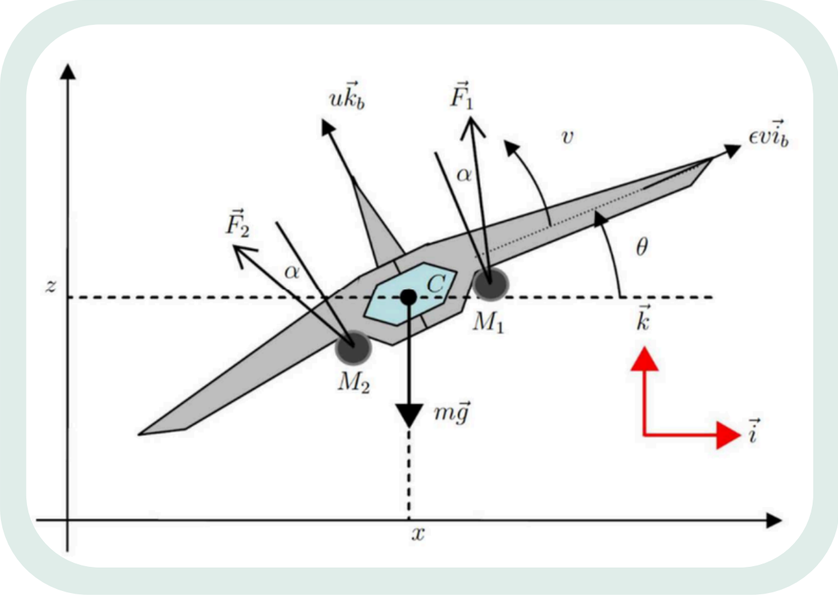

with ϵ≠0 for the strong input coupling

Hardware Sizing

- **Thrust Requirements:**

Motors M1 and M2 must be sized to ensure total thrust u can overcome the weight mg and the inertial resistance Je.

- **Inertia Matching:**

The physical dimensions (length l) must be chosen to ensure the moments of inertia (J) allow for responsive control without overstressing the motors.

- **Sensor Selection:**

An IMU sensor and 2 potentiometers providing real-time feedback for the roll angle, yaw angle and elevation and their speed .

Real-World Prototype Implementation

Following a methodology focused on cost-efficiency $\vec{F}_1$ and $\vec{F}_2$ accessible components:

- **Actuators :** Two brushless motors positioned at M1 and M2 to generate the thrust forces and .
- **Processing Unit :** Arduino microcontroller used for data acquisition and executing the control law.
- **Elevation & Speed Sensing :** An IMU is utilized to read elevation (e) and speed ($\dot{e}$) in real-time.

Real-World Prototype Implementation

- Mechanical Feedback (Potentiometers): Two potentiometers are mechanically linked to the structure to read Roll (θ) and Yaw (Ψ) as the robot rotates.

- Power & Cost: Powered by a dedicated power supply, utilizing non-expensive and readily available components to minimize total cost.

The Transition: Why the New Model?

We transitioned from the initial benchmark dynamics to the 3-DOF Helicopter Rig model to better align with our physical setup.

- **Physical Feasibility :** The original model describes a free-flying aircraft, which is significantly harder to stabilize and implement in a lab setting.
- **Supported Constraints :** Our rig uses a mechanical support structure, making the 3-DOF model much easier to implement and safer to test while still capturing complex dynamics.
- **Axis Integration :** It directly incorporates the Elevation (e), Roll (θ), and Yaw (Ψ) axes we measure using our IMU and mechanical potentiometers.

The New Dynamics

$$\begin{cases} J_e \ddot{e} = l\,(u\cos\theta + \epsilon\, v \sin\theta) - mgl\cos e \\ \\ J_\theta \ddot{\theta} = d\, v \\ \\ J_\psi \ddot{\psi} = l\,(u\sin\theta + \epsilon\, v\cos\theta)\cos e \end{cases}$$

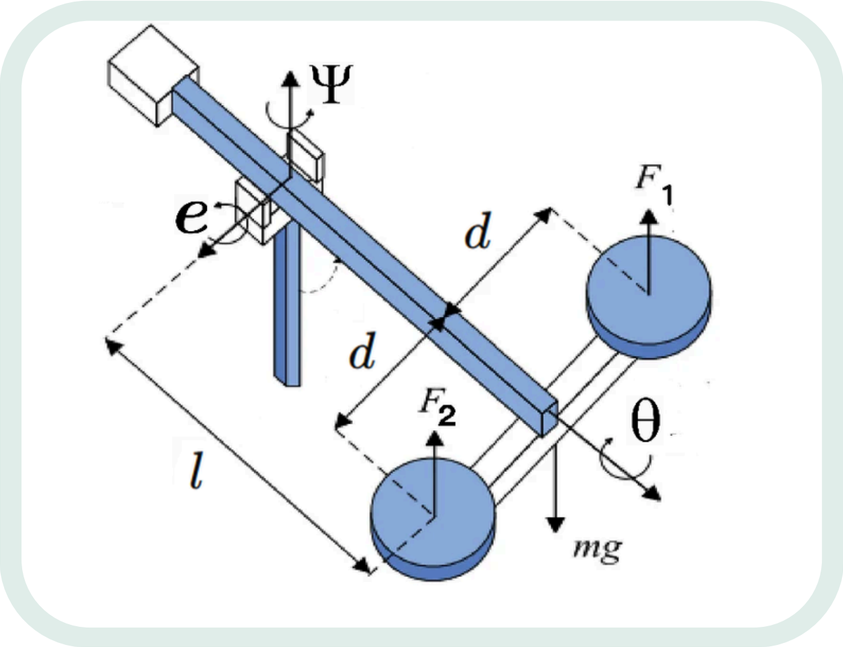

$$l = 0.56 \text{ m}, \quad d = 0.14 \text{ m}$$

$$J_\psi = 0.23 \text{ kg m}^2, \quad J_e = 0.21 \text{ kg m}^2, \quad J_\theta = 0.0032 \text{ kg m}^2$$

$$\epsilon = 0.2$$

Linearized State-Dpace Representation:

$$\dot{x} = Ax + B\tau \qquad \tau = \begin{bmatrix} u \\ v \end{bmatrix} = \begin{bmatrix} F_1 + F_2 \\ F_1 - F_2 \end{bmatrix}$$

$$x = \begin{bmatrix} e \\ \theta \\ \psi \\ \dot{e} \\ \dot{\theta} \\ \dot{\psi} \\ \int e \\ \int \psi \end{bmatrix} \quad A = \begin{bmatrix} 0 & 0 & 0 & 1 & 0 & 0 & 0 & 0 \\ 0 & 0 & 0 & 0 & 1 & 0 & 0 & 0 \\ 0 & 0 & 0 & 0 & 0 & 1 & 0 & 0 \\ 0 & 0 & 0 & 0 & 0 & 0 & 0 & 0 \\ 0 & 0 & 0 & 0 & 0 & 0 & 0 & 0 \\ 0 & \frac{lu_0}{J_\psi} & 0 & 0 & 0 & 0 & 0 & 0 \\ -1 & 0 & 0 & 0 & 0 & 0 & 0 & 0 \\ 0 & 0 & -1 & 0 & 0 & 0 & 0 & 0 \end{bmatrix} \quad B = \begin{bmatrix} 0 & 0 \\ 0 & 0 \\ 0 & 0 \\ \frac{l}{J_e} & 0 \\ 0 & \frac{d}{J_\theta} \\ 0 & \frac{l\epsilon}{J_\psi} \\ 0 & 0 \\ 0 & 0 \end{bmatrix}$$

$$u_0 = mg$$

The Linear Quadratic Regulator (**LQR**) is an optimal control method that stabilizes a linear system using state feedback **u** = −**K.x** It works by minimizing a cost function that balances state error and control effort:

$$J = \int_0^\infty (x^T Q x + u^T R u)\, dt$$

The matrices **Q** and **R** lets us tune the trade-off: higher **Q** prioritizes accuracy, while higher **R** reduces control effort. The optimal gain **K** is obtained by solving the **Riccati equation**, giving a systematic way to design an efficient and stable controller.

After refining the Q and R matrices, we find these values to be optimal:

$$Q = \begin{bmatrix} 100 & 0 & 0 & 0 & 0 & 0 & 0 & 0 \\ 0 & 300 & 0 & 0 & 0 & 0 & 0 & 0 \\ 0 & 0 & 150 & 0 & 0 & 0 & 0 & 0 \\ 0 & 0 & 0 & 1 & 0 & 0 & 0 & 0 \\ 0 & 0 & 0 & 0 & 100 & 0 & 0 & 0 \\ 0 & 0 & 0 & 0 & 0 & 5 & 0 & 0 \\ 0 & 0 & 0 & 0 & 0 & 0 & 30 & 0 \\ 0 & 0 & 0 & 0 & 0 & 0 & 0 & 20 \end{bmatrix} \qquad R = \begin{bmatrix} 300 & 0 \\ 0 & 300 \end{bmatrix}$$

Solving the Riccati equation in MATLAB yields the following values for K:

$$K = \begin{bmatrix} 0.9287 & 0 & 0 & 0.8366 & 0 & 0 & -0.3162 & 0 \\ 0 & 1.7954 & 1.3396 & 0 & 0.6171 & 2.5070 & 0 & -0.2582 \end{bmatrix}$$

THANK YOU