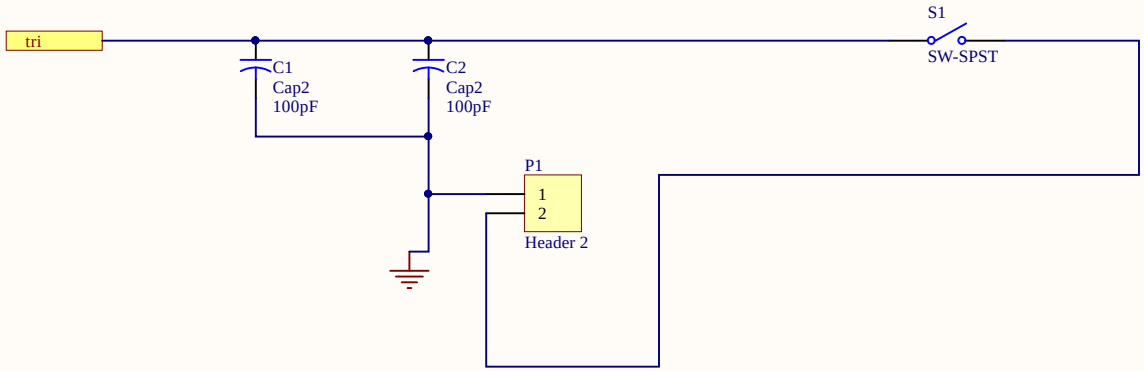

Title		
Size: A4	Number	Revision
Date: 03/04/2022		Sheet of
File: E:\2 Gec1\..\BLOCINT.SchDoc		Drawn By:

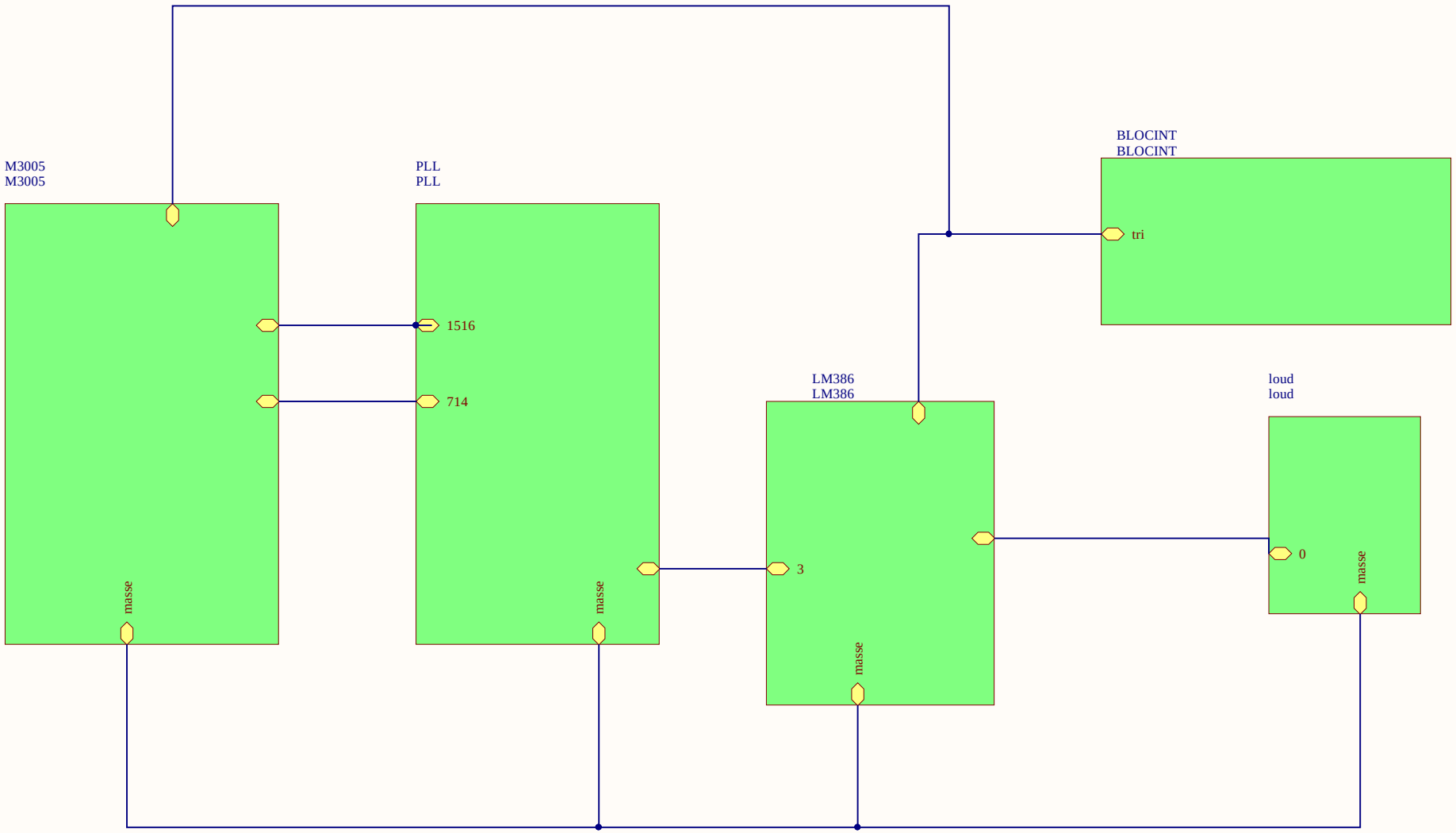

Title		
Size: A4	Number	Revision
Date: 03/04/2022		Sheet of
File: E:\2 Gec1\..\Haut.SchDoc		Drawn By:

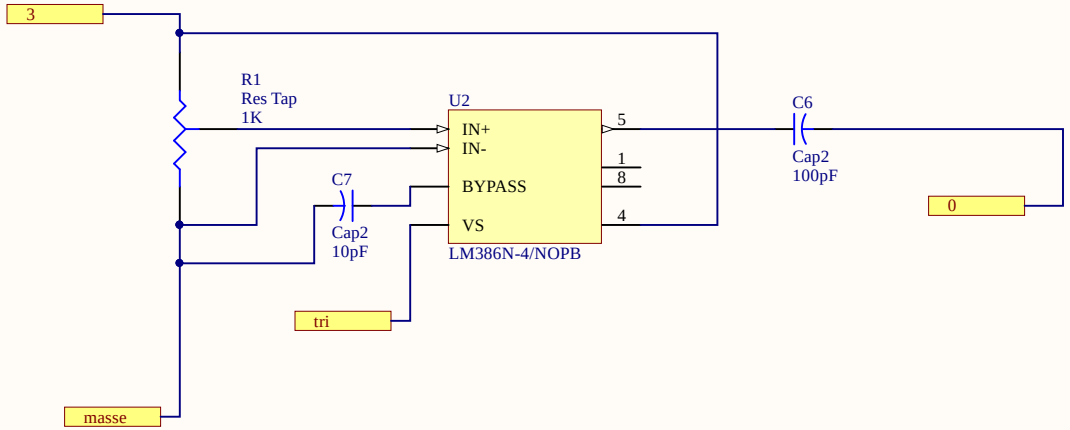

Title		
Size: A4	Number	Revision
Date: 03/04/2022		Sheet of
File: E:\2 Gec1\..\LM386.SchDoc		Drawn By:

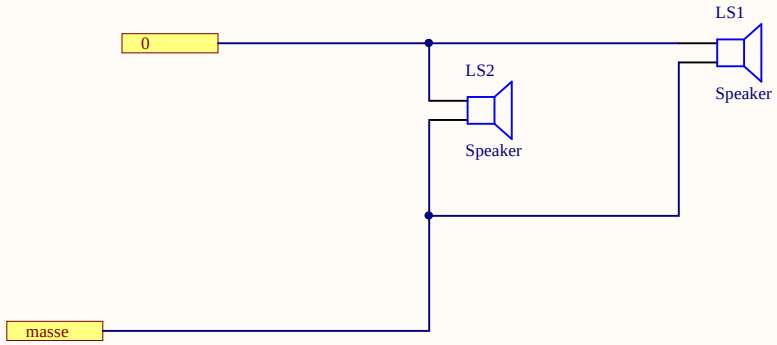

Title		
Size A4	Number	Revision
Date: 03/04/2022		Sheet of
File: E:\2 Gec1\..\loud.SchDoc		Drawn By:

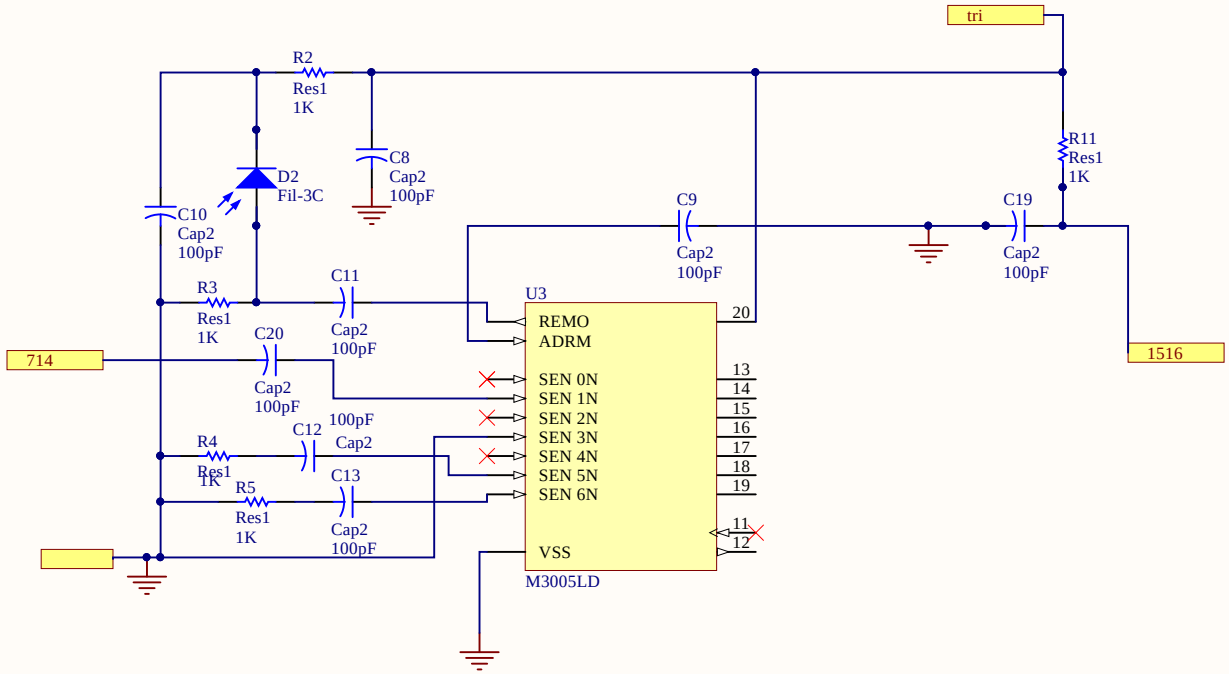

Title		
Size A4	Number	Revision
Date: 03/04/2022		Sheet of
File: E:\2 Gec1\..\M3005.SchDoc		Drawn By:

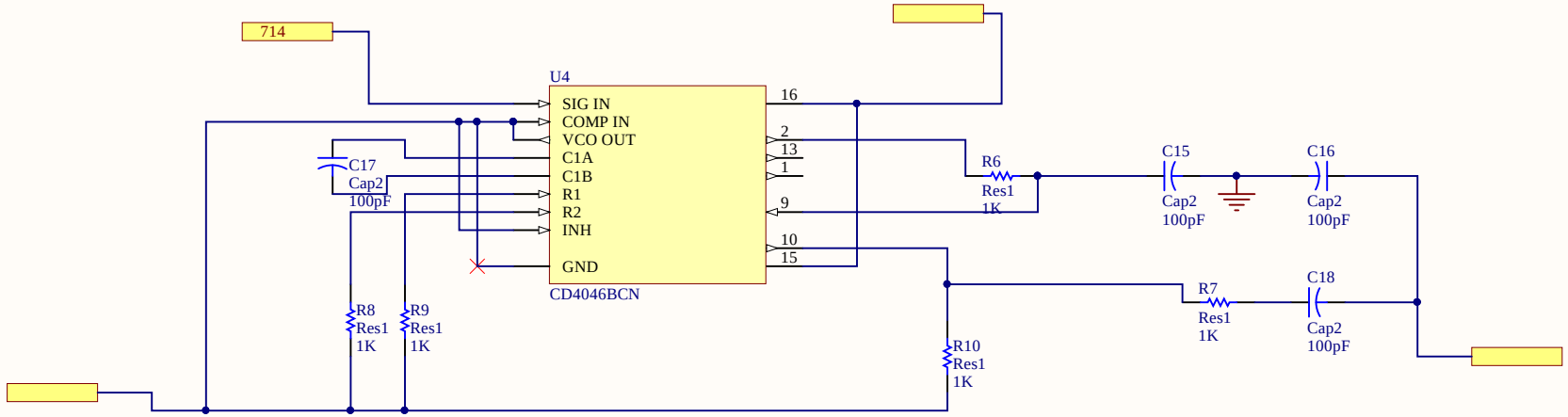

Title		
Size A4	Number	Revision
Date: 03/04/2022		Sheet of
File: E:\2 Gec1\..\PLL.SchDoc		Drawn By:

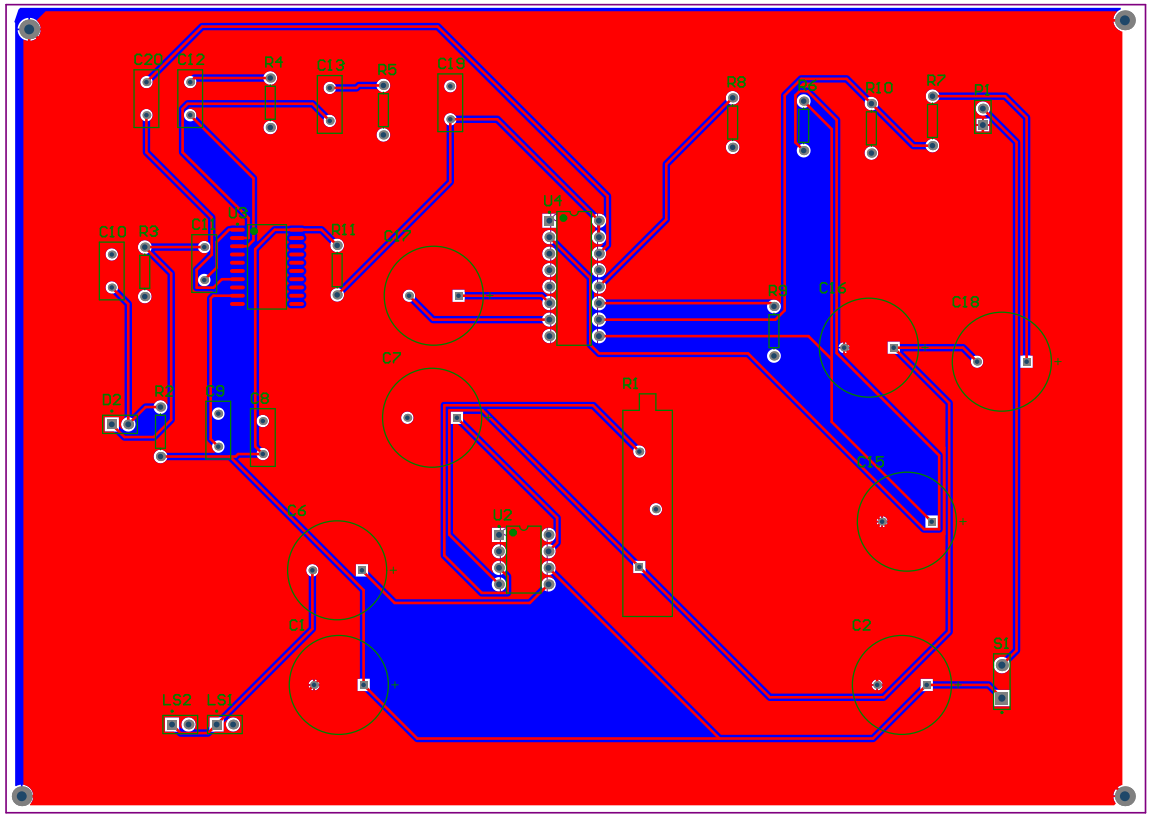
C20
C12
R4
C13
R5
C19
R8
R10
R7
R9
C10
R3
D1
U3
R11
C17
U4
R6
C14
C18
C7
D2
R2
C9
C8
R1
C15
C6
U2
C1
C2
S1
LS2
LS1

Item #	mn Name Error:Manufa	#Column Name Error:Manufacturer No	Quantity	#Column Name Error:Note	Designator	Description	Footprint	Comment	LibRef
1			8		C1, C2, C6, C7, C15, C16, C17, C18	Capacitor	RB7.6-15	Cap2	Cap2
2			8		C8, C9, C10, C11, C12, C13, C19, C20	Capacitor	RAD-0.2	Cap2	Cap2
3			1		D2	Photosensitive Diode	PIN2	Fil-3C	Photo Sen
4			2		LS1, LS2	Loudspeaker	PIN2	Speaker	Speaker
5			1		P1	Header, 2-Pin	HDR1X2	Header 2	Header 2
6			1		R1	Tapped Resistor	VR3	Res Tap	Res Tap
7			10		R2, R3, R4, R5, R6, R7, R8, R9, R10, R11	Resistor	AXIAL-0.3	Res1	Res1
8			1		S1	Single-Pole, Single-Throw Switch	SPST-2	SW-SPST	SW-SPST
9			1		U2	Low Voltage Audio Power Amplifier, 8-pin MDIP, Pb-Free	N08E	LM386N-4/NOPB	LM386N-4/NOPB
10			1		U3	Remote Control Transmitter	SO20_N	M3005LD	M3005LD
11			1		U4	Micropower Phase-Locked Loop	N16E	CD4046BCN	CD4046BCN