ULTRASONIC SENSOR-BASED INTRUDER DETECTION SYSTEM AND ACTUATION

A Mini Project Report

Submitted in Partial Fulfilment of the Requirements for

the Course

CSE321 Embedded Systems Design

by

MANNAVA VENKATA RAGHUPATHI SAI	**(2023BCS0096)**
INCHARA M P	**(2023BCS0129)**
MOHAMMED SABEEH K	**(2023BCS0108)**
TIPPANAWAR YASH SHITAL	**(2023BCD0054)**
ARYAN RAJU PASALWAD	**(2023BCD0012)**
ABIN V TOMY	**(2023BCS0084)**
KARTHIK P	**(2023BCD0051)**

Department of Electronics and Communication Engineering Indian Institute of Information Technology Kottayam

April 2026

DECLARATION

We the undersigned, **MANNAVA VENKATARAGHUPATHI SAI (2023BCS0096)**, **INCHARA M P (2023BCS0129)**, **MOHAMMED SABEEH K (2023BCS0108)**, **TIPPANAWAR YASH SHITAL (2023BCD0054)**, **ARYAN RAJU PASALWAD (2023BCD0012)**, **ABIN V TOMY (2023BCS0084)**, **KARTHIK P (2023BCD0051)** hereby declare that the mini project titled **"Ultrasonic Sensor-Based Intruder Detection System and Actuation"** submitted to the **Indian Institute of Information Technology Kottayam** in partial fulfilment of the requirements of the course **CSE321 – Embedded Systems Design** is an original work carried out by us under the supervision of **Dr. Della Thomas**.

This report has not been submitted elsewhere for the award of any degree or diploma in this or any other institution. All sources of external information used in the report have been duly acknowledged.

Kottayam – 686635

April 2026

MANNAVA VENKATA RAGHUPATHI SAI

INCHARA M P

MOHAMMED SABEEH K

TIPPANAWAR YASH SHITAL

ARYAN RAJU PASALWAD

ABIN V TOMY

KARTHIK P

CERTIFICATE

This is to certify that the mini project entitled **"Ultrasonic Sensor-Based Intruder Detection System and Actuation"**, submitted by **MANNAVA VENKATA RAGHUPATHI SAI (2023BCS0096), INCHARA M P (2023BCS0129), MOHAMMED SABEEH K (2023BCS0108), TIPPANAWAR YASH SHITAL (2023BCD0054), ARYAN RAJU PASALWAD (2023BCD0012), ABIN V TOMY (2023BCS0084), KARTHIK P (2023BCD0051)** to the Indian Institute of Information Technology Kottayam, has been carried out under my supervision as part of the course CSE321 – Embedded Systems Design.

It is further certified that this work has not been submitted elsewhere for the award of any degree.

Kottayam – 686635 (Dr. Della Thomas)

April 2026 Course Instructor / Project Supervisor

ABSTRACT

The aim of this mini project is to design and develop an **Ultrasonic Sensor-Based Intruder Detection System and Actuation** using both **8051** and **ARM (LPC2148) microcontrollers**. The system is intended to detect the presence of objects within a predefined range and provide **real-time alerts and actuation**, making it suitable for **security and monitoring applications**.

The hardware configuration consists of an **HC-SR04 ultrasonic sensor** interfaced with the microcontrollers to acquire environmental data. A **16×2 LCD display** is used to show the system status, while an **LED indicator** is additionally used in the LPC2148 implementation for alert and **actuation response**. The system operates on the principle of **acoustic reflection**, where ultrasonic waves are transmitted and the reflected echo signal is received. The **echo pulse duration** is measured using **software-based counters**, and this value is used to determine whether an object is present within a **predefined threshold range**.

The methodology involves **sensor interfacing**, **trigger signal generation**, **echo duration measurement**, and **threshold-based decision logic**. The **8051 implementation** uses **assembly programming** with a **fixed threshold**, while the **LPC2148 implementation** utilizes **embedded C** with a **range-based threshold**, along with enhancements such as **timeout handling** and **state-based LCD updates**.

The results demonstrate that the system is capable of **real-time intrusion detection and actuation** with **reliable performance**. The **LPC2148 implementation** provides improved **speed**, **efficiency**, and **accuracy** compared to the 8051. This project highlights the effectiveness of **ultrasonic sensing** and **embedded systems** in developing **practical, low-cost, and automated security solutions**.

Contents

Contents v

List of Figures vi

List of Tables vii

1 Introduction 1

2 Construction of *(your system name)* 2

3 Implementation and Results 3

4 Conclusion 4

Bibliography 5

List of Figures

Fig 2.1 Block Diagram of LPC2148
Fig 2.2 LPC2148 Circuit Diagram (Proteus Implementation)
Fig 2.3 Block Diagram of 8051
Fig 2.4 8051 Circuit Diagram (Proteus Implementation)

Fig 3.1 Safe mode of 8051
Fig 3.2 Intruder mode of 8051
Fig 3.3 Safe mode of LPC2148
Fig 3.4 Intruder mode of LPC2148

List of Tables

Table 3.1 Comparison Between 8051 and LPC2148

CHAPTER 1

Introduction

Modern security demands efficient, real-time protection against unauthorized access to restricted areas. Traditional manual monitoring often fails to provide the immediate response necessary for effective security. To address this, automated systems using embedded technology have become essential. This project implements an **ultrasonic sensor-based intruder detection system and actuation**, providing a reliable and cost-effective solution for automated surveillance.

The primary objective is to develop a system that detects the presence of objects within a defined range and triggers an immediate alert, such as a display indication or LED activation. The system utilizes ultrasonic sensing technology to measure the **echo pulse duration** of sound waves. By evaluating the time interval between the emission of a high-frequency pulse and the reception of its echo, the microcontroller determines whether an object is within a predefined threshold range. Any variation in this measured value is interpreted as an intrusion, initiating an automated actuation mechanism.

This design is based on fundamental principles of **embedded systems and sensor interfacing**. Ultrasonic sensors are highly effective due to their accuracy and ability to operate under varying lighting conditions. By using microcontrollers for real-time signal processing and decision-making, the system ensures a compact, efficient, and responsive solution for security applications.

CHAPTER 2

Construction of Ultrasonic Sensor-Based Intruder Detection System and Actuation

➢ LPC2148 System

2.1 LPC2148-Based System Overview

The ultrasonic sensor-based intruder detection system is implemented using the **LPC2148 microcontroller** to detect the presence of objects and provide alerts through an **LCD display and LED indicator**.

The system operates by transmitting ultrasonic waves using the sensor and receiving the reflected echo signal. The **echo pulse duration** is measured by the microcontroller using a software-based counter. Instead of calculating exact distance, this measured value is compared with a **predefined threshold range** to determine whether an object is present within the monitored area.

If the measured value falls within the defined threshold, the system identifies it as an intrusion and activates the **LED alert** while updating the **LCD display** accordingly. Otherwise, the system displays a safe status. This approach ensures a simple, fast, and reliable real-time detection mechanism.

CHAPTER 2

2.2 Block Diagram of the System

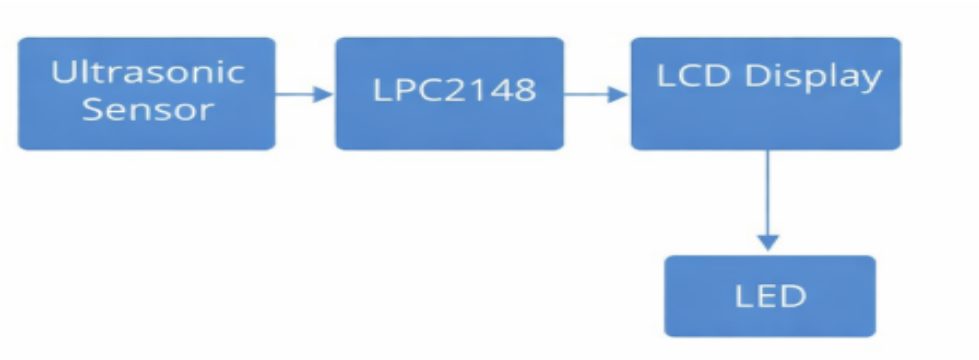

Fig 2.1 Block Diagram of LPC2148-Based Intruder Detection System

Blocks:

- LPC2148 Microcontroller
- Ultrasonic Sensor (HC-SR04)
- LCD Display (16×2)
- LED (Alert Indicator)

2.3 Components Required

The following components are used in the implementation:

- Ultrasonic Sensor (HC-SR04)
- 16×2 LCD Display
- LED (Alert Indicator)
- Resistors
- Power Supply (3.3V / 5V as required)

CHAPTER 2

2.4 Circuit Diagram (Proteus Implementation)

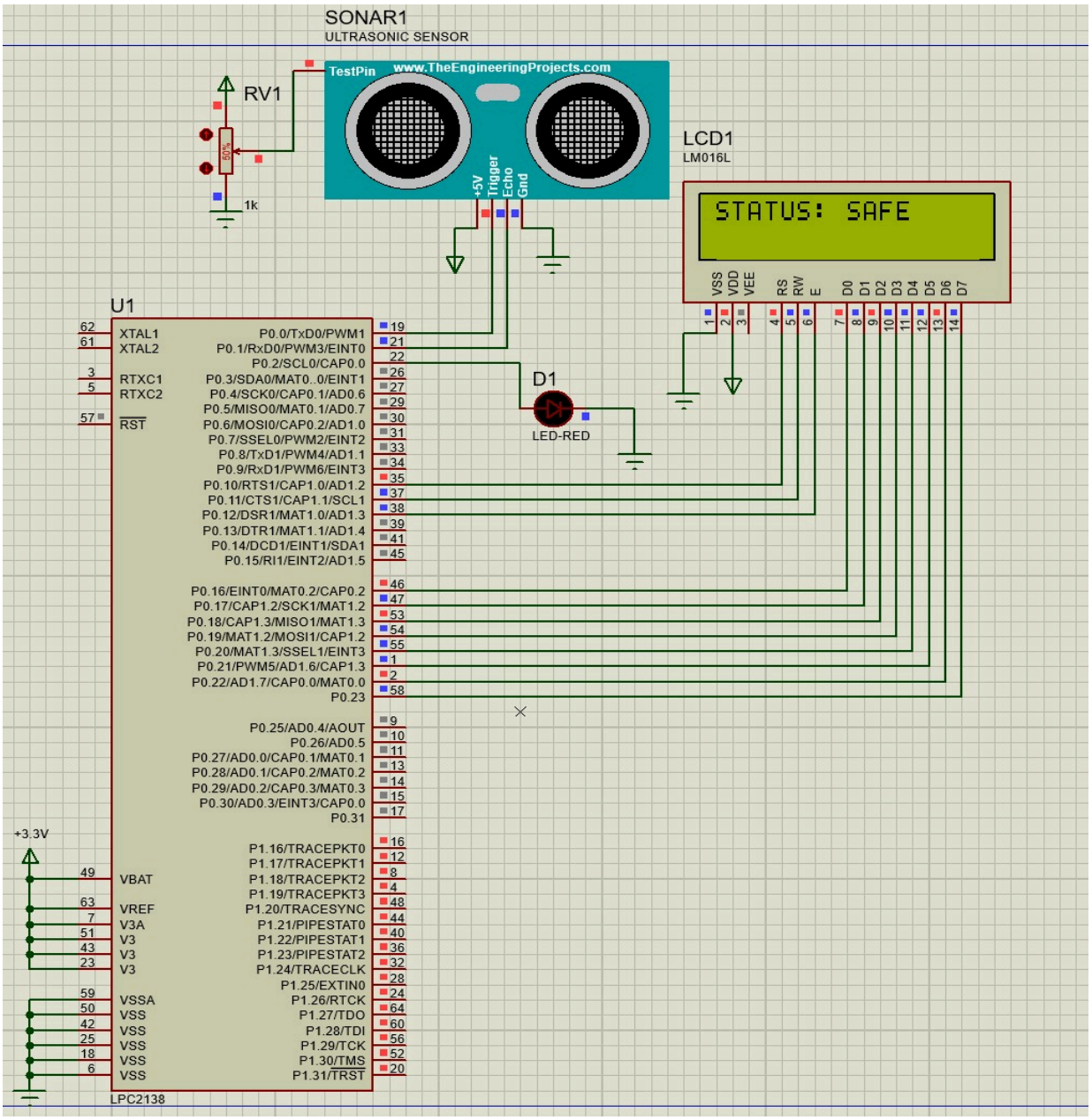

Fig 2.2 LPC2148 Circuit Diagram (Proteus Implementation)

CHAPTER 2

Pin Connections

- Trigger pin → P0.0 (Output)
- Echo pin → P0.1 (Input)
- LED → P0.2 (Output)
- LCD Data → P0.16 – P0.23
- LCD Control → P0.10 – P0.12

2.5 Working Principle

The working of the system can be explained as follows:

- ➢ The microcontroller sends a trigger pulse to the ultrasonic sensor.
- ➢ The sensor emits ultrasonic waves into the environment.
- ➢ When the waves hit an object, they are reflected back as an echo.
- ➢ The Echo pin remains HIGH for the duration of the reflected signal.
- ➢ The microcontroller measures this **echo pulse duration using a software counter**.
- ➢ The measured value is **compared with a predefined threshold range**.
- ➢ If the value lies within the threshold range:
    - LED turns ON
    - LCD displays **"INTRUDER ALERT!"**
- ➢ Otherwise:
    - LED remains OFF
    - LCD displays **"STATUS: SAFE"**

Advantages of using LPC2148

- High processing speed (up to 60 MHz)
- Efficient handling of real-time signal processing
- Better performance compared to 8051
- More GPIO pins for flexible interfacing
- Improved accuracy due to faster execution
- Supports advanced embedded applications

CHAPTER 2

➢ 8051 SYSTEM

2.6 8051-Based System Design

The 8051-based intruder detection system uses an ultrasonic sensor to detect the presence of objects and displays the system status on an LCD.

The microcontroller measures the echo pulse duration of ultrasonic waves using a software-based counter. Instead of calculating exact distance, the measured value is compared with a fixed threshold (150) to determine whether an object is present within the monitored range.

Based on this comparison, the system displays either “INTRUDER” or “SAFE” on the LCD.

2.7 Block Diagram

Fig 2.3 Block Diagram of 8051-Based System

Main Blocks:

- 8051 Microcontroller (AT89C51)
- Ultrasonic Sensor (HC-SR04)
- LCD Display (16×2)
- Power Supply

CHAPTER 2

2.8 Components Used

- AT89C51 Microcontroller
- Ultrasonic Sensor (HC-SR04)
- 16×2 LCD Display
- Resistors
- Capacitor (for stability)
- Power Supply (5V)

2.9 Circuit Diagram

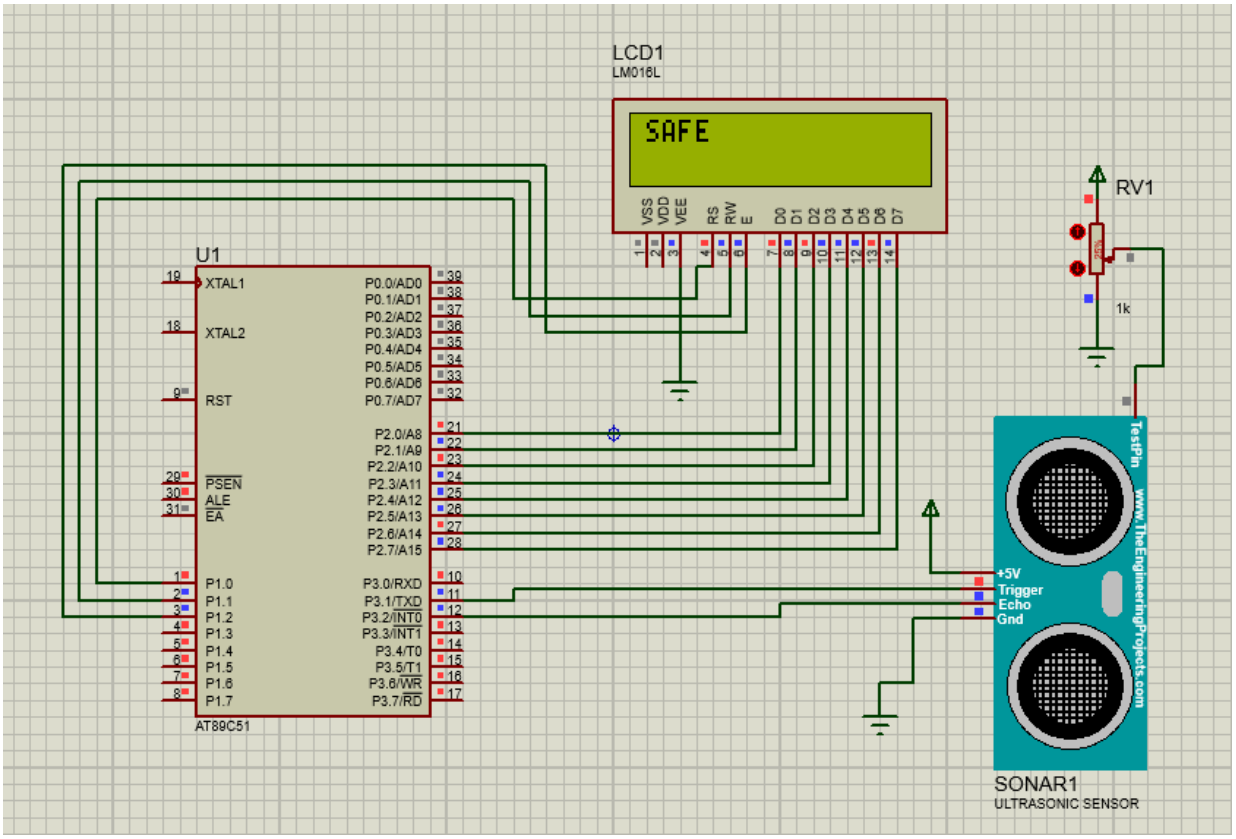

Fig 2.4 8051 Circuit Diagram (Proteus Implementation)

CHAPTER 2

Pin Connections

- Trigger → P3.1 (Output)
- Echo → P3.2 (Input)
- LCD Data → Port 2 (P2)
- LCD Control:
    - RS → P1.0
    - RW → P1.1
    - EN → P1.2

The circuit utilizes an **AT89C51 microcontroller** interfaced with an **HC-SR04 ultrasonic sensor**. It measures the **echo pulse duration** of the reflected ultrasonic signal and provides real-time status updates on a **16×2 character LCD**, indicating either **"SAFE"** or **"INTRUDER"** based on a predefined threshold value.

2.10 Working Principle

The working of the system is as follows:

- The microcontroller sends a trigger pulse to the ultrasonic sensor.
- The sensor emits ultrasonic waves into the environment.
- When the waves hit an object, they are reflected back to the sensor.
- The Echo pin (P3.2) becomes HIGH for the duration of the reflected signal.
- The microcontroller counts this duration using register **R5**.
- A delay is introduced to control counting speed and avoid overflow.
- The measured count is compared with a **threshold value (150)**.

Decision Logic:

- If count < threshold → **Intruder detected**
- Else → **Safe condition**

LCD Display:

- Displays **"INTRUDER"** when an object is within the threshold
- Displays **"SAFE"** otherwise

CHAPTER 2

2.11 Advantages of 8051 Implementation

- Simple and easy to understand
- Low cost
- Suitable for basic embedded applications
- Efficient for small-scale systems

CHAPTER 3

Implementation and Results

3.1 Implementation Using 8051 Microcontroller

When it’s safe

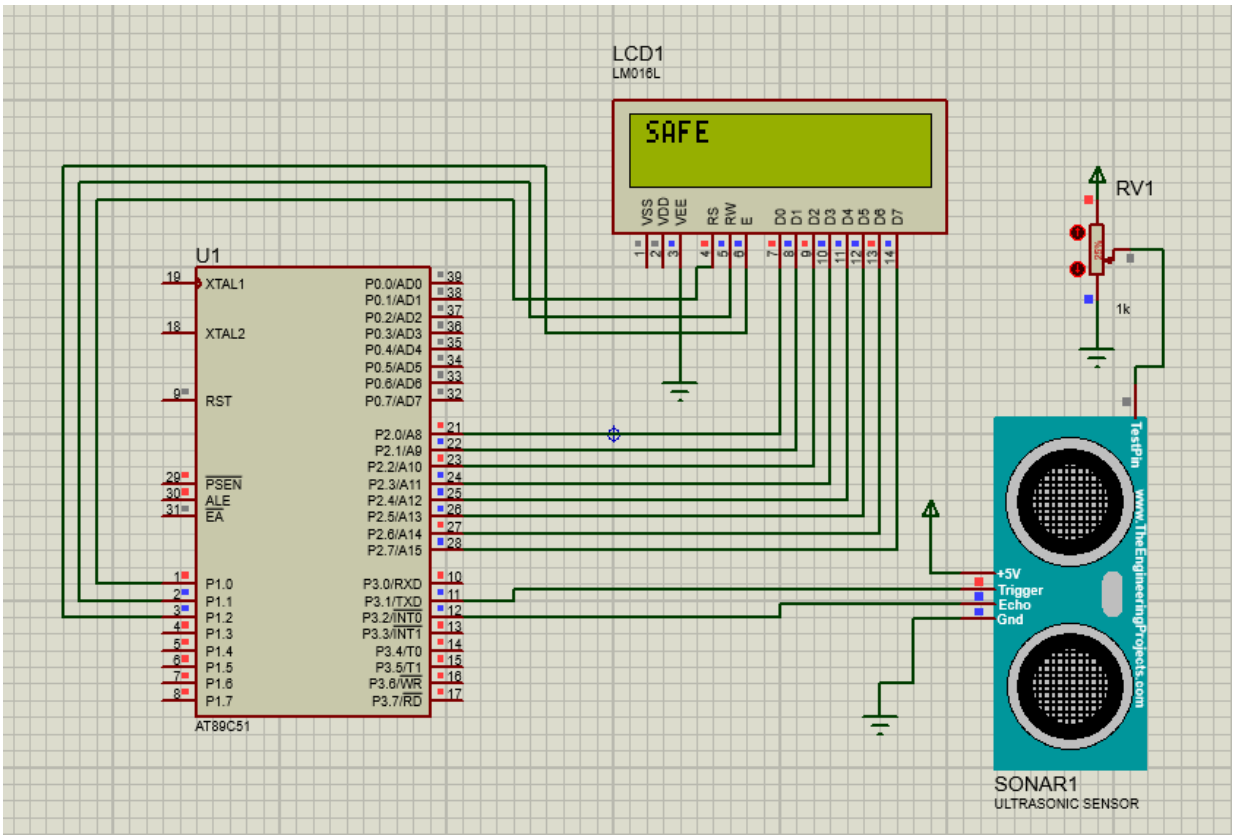

Fig 3.1 Safe mode of 8051

CHAPTER 3

When it's attacked

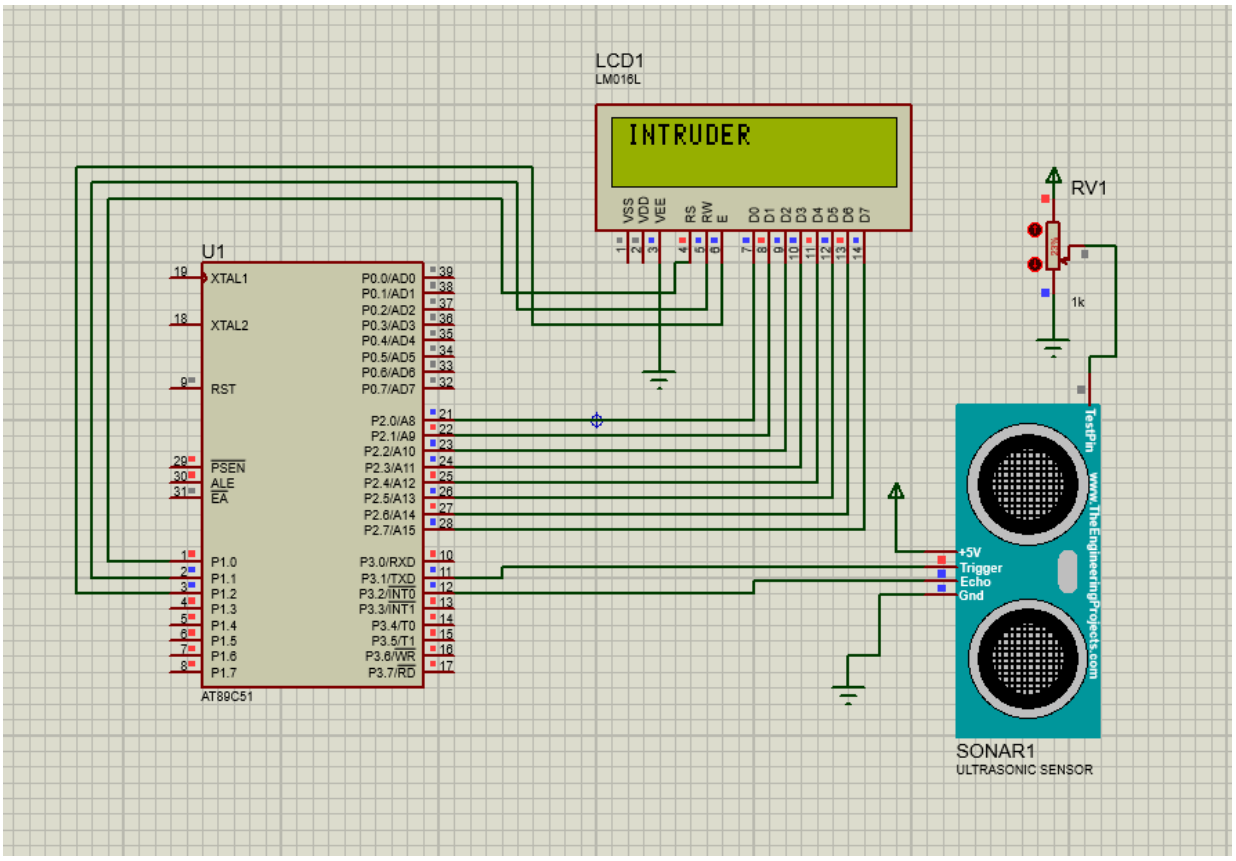

Fig 3.2 Intruder mode of 8051

The 8051-based implementation of the intruder detection system is carried out using the **AT89C51 microcontroller** interfaced with an ultrasonic sensor and a **16×2 LCD display**. The trigger signal for the ultrasonic sensor is generated from **Port 3.1** of the microcontroller, which initiates the transmission of ultrasonic waves. The echo signal received from the sensor is connected to **Port 3.2**, and its **pulse duration is measured by the microcontroller using a software-based counter**.

CHAPTER 3

The measured value is processed internally, and based on a **predefined threshold (150)**, the system identifies whether an object is within the critical range. The control signals for the LCD, namely **RS, RW, and EN**, are connected to **Port 1 pins**, while the data lines of the LCD are interfaced with **Port 2** of the microcontroller for **8-bit communication**.

If the measured value is below the threshold, the system displays **"INTRUDER"** on the LCD; otherwise, it displays **"SAFE."** Thus, the microcontroller continuously monitors the surroundings and provides **real-time visual indication of intrusion** using the LCD display.

Key Features

- Uses **AT89C51 (8051) microcontroller** as the control unit
- Interfaced with an **ultrasonic sensor (HC-SR04)** for detection
- Measures **echo pulse duration using software-based counting (R5 register)**
- Displays output on a **16×2 LCD (8-bit mode via Port 2)**
- Implements **threshold-based intrusion detection ("INTRUDER" / "SAFE")**
- Provides **real-time monitoring with continuous sensing loop**

3.1.1 8051 Assembly Code

```
ORG 0000H
; -------- LCD CONTROL --------
RS BIT P1.0
RW BIT P1.1
EN BIT P1.2

; -------- START --------
START:
   ACALL DELAY_MS            ; Give Proteus a moment to initialize power
   ACALL LCD_INIT

MAIN_LOOP:
```

```
    ACALL TRIGGER

    ; --- TIMEOUT PROTECTION ---
    MOV R4, #255        ; Timeout counter
WAIT_HIGH:
    JB P3.2, ECHO_FOUND
    DJNZ R4, WAIT_HIGH
    SJMP MAIN_LOOP              ; If no echo comes, try again

ECHO_FOUND:
    MOV R5, #00H        ; Reset distance counter

COUNT_ECHO:
    JNB P3.2, CHECK_DIST
    INC R5
    MOV A, R5
    JZ MAX_OUT                  ; If R5 hits 255 and rolls to 0, jump to MAX_OUT
    ACALL DELAY_100US           ; Slow down the counting so R5 doesn't overflow!
    SJMP COUNT_ECHO

MAX_OUT:
    MOV R5, #255        ; Cap the distance at max
    SJMP CHECK_DIST

CHECK_DIST:
    MOV A, R5
    CJNE A, #150, NOT_EQUAL
    SJMP INTRUDER_STATE

NOT_EQUAL:
    JC INTRUDER_STATE           ; A < 50 ? intruder
    SJMP SAFE_STATE

; -------- STATES --------
INTRUDER_STATE:
    ACALL LCD_CLEAR
    MOV DPTR, #MSG1
    ACALL LCD_PRINT
    ACALL DELAY_LONG
```

```
    SJMP MAIN_LOOP

SAFE_STATE:
    ACALL LCD_CLEAR
    MOV DPTR, #MSG2
    ACALL LCD_PRINT
    ACALL DELAY_LONG
    SJMP MAIN_LOOP

; -------- TRIGGER --------
TRIGGER:
    CLR P3.1
    SETB P3.1
    ACALL DELAY_20US        ; Made pulse slightly longer to ensure sensor reads it
    CLR P3.1
    RET

; -------- LCD --------
LCD_INIT:
    MOV A, #38H
    ACALL LCD_CMD
    MOV A, #0CH
    ACALL LCD_CMD
    MOV A, #01H
    ACALL LCD_CMD
    MOV A, #06H
    ACALL LCD_CMD
    RET

LCD_CMD:
    MOV P2, A
    CLR RS
    CLR RW
    SETB EN
    ACALL DELAY_SMALL
    CLR EN
    ACALL DELAY_MS          ; Generous delay for slow LCD commands
    RET
```

```
LCD_DATA:
   MOV P2, A
   SETB RS
   CLR RW
   SETB EN
   ACALL DELAY_SMALL
   CLR EN
   ACALL DELAY_MS
   RET

LCD_PRINT:
   CLR A
NEXT_CHAR:
   MOVC A, @A+DPTR
   JZ PRINT_DONE
   ACALL LCD_DATA
   INC DPTR
   CLR A
   SJMP NEXT_CHAR

PRINT_DONE:
   RET

LCD_CLEAR:
   MOV A, #01H
   ACALL LCD_CMD
   ACALL DELAY_MS
   ACALL DELAY_MS
   RET

; -------- DELAYS --------
DELAY_SMALL:
   NOP
   NOP
   RET

DELAY_20US:
   MOV R6, #10
D20:DJNZ R6, D20
```

```
    RET

DELAY_100US:
    MOV R6, #45
D100:DJNZ R6, D100
    RET

DELAY_MS:
    MOV R6, #250
DMS:NOP
    NOP
    DJNZ R6, DMS
    RET

DELAY_LONG:
    MOV R7, #3
DL1:MOV R6, #255
DL2:MOV R5, #255
DL3:DJNZ R5, DL3
    DJNZ R6, DL2
    DJNZ R7, DL1
    RET

; -------- MESSAGES --------
MSG1: DB "INTRUDER",00H
MSG2: DB "SAFE",00H

END
```

CHAPTER 3

3.2 Implementation Using LPC2148

When it's safe

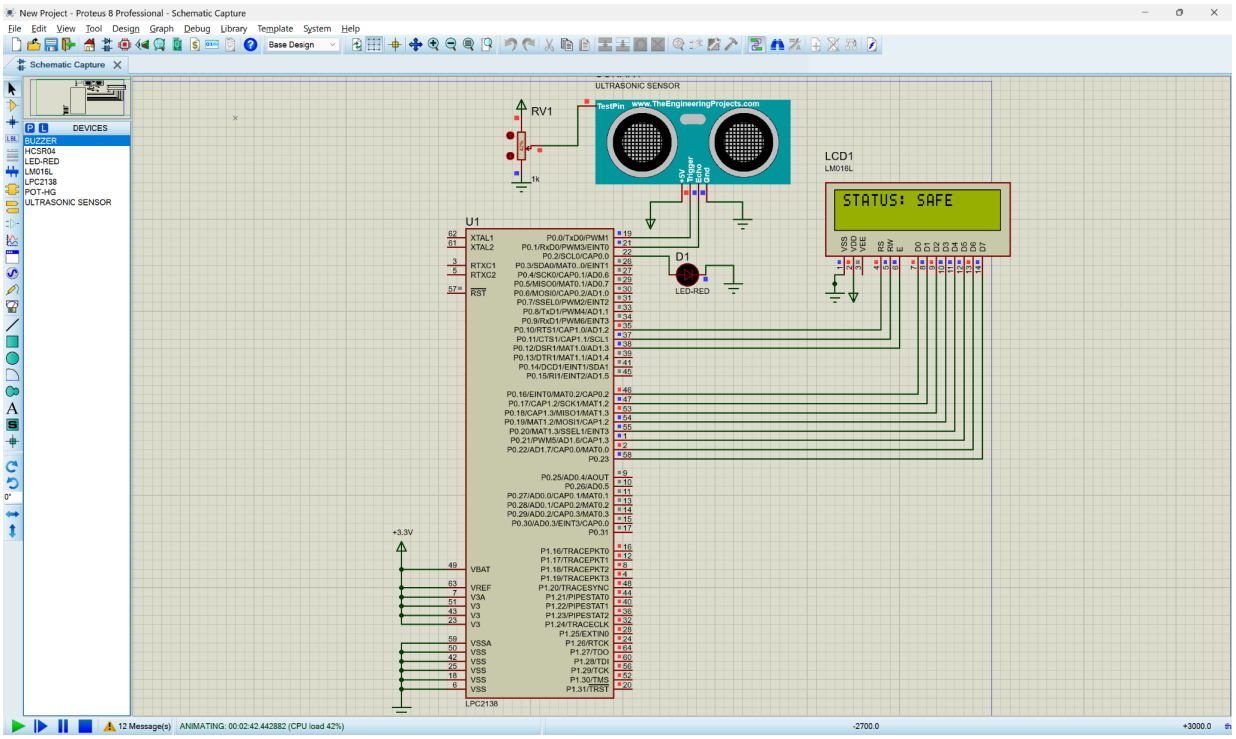

Fig 3.3 Safe mode of LPC2148

CHAPTER 3

When it's attacked

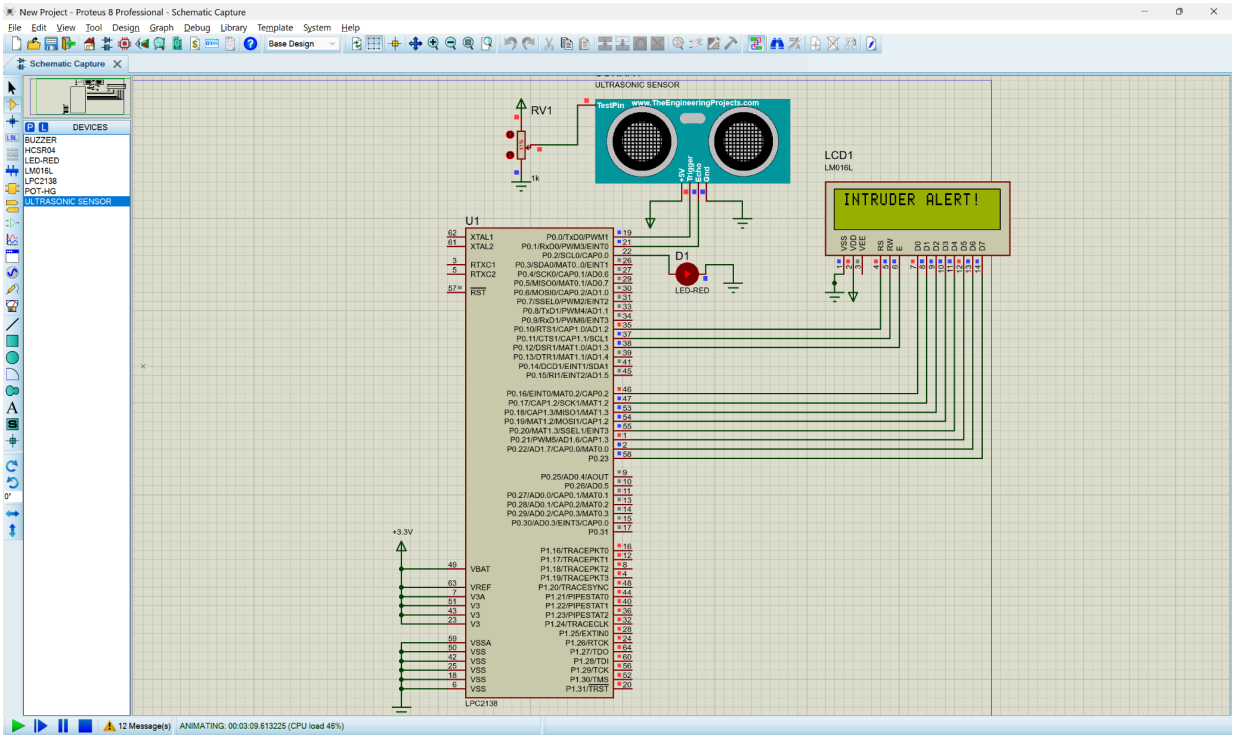

Fig 3.4 Intruder mode of LPC2148

The ARM7-based implementation of the intruder detection system is carried out using the **LPC2148 microcontroller** interfaced with an **HC-SR04 ultrasonic sensor**, an **LED indicator**, and a **16×2 LCD display**. The trigger signal for the ultrasonic sensor is generated from **Port 0.0 (P0.0)** of the microcontroller, which initiates the transmission of ultrasonic waves. The echo signal received from the sensor is connected to **Port 0.1 (P0.1)**, and its **pulse width is measured by counting loop iterations in the microcontroller**.

The measured pulse count is compared against a **predefined threshold range (greater than 2 and less than 3500)**. If the count falls within this range, the system identifies that an object is within the critical range and flags it as an intrusion. The control signals for the LCD, namely **RS, RW, and EN**, are connected to **P0.10, P0.11, and P0.12** respectively, while the 8-bit data lines of the LCD are interfaced with **P0.16 through P0.23** of the microcontroller, achieved by left-shifting the data byte by 16 bits before writing to the GPIO register.

If the measured pulse count lies within the threshold range, the system turns ON the **LED connected at P0.2** and displays **"INTRUDER ALERT!"** on the LCD; otherwise, the LED is turned OFF and the LCD displays **"STATUS: SAFE"**. The LCD is updated only when a **state change is**

detected, avoiding unnecessary refreshes.

Thus, the microcontroller continuously monitors the surroundings and provides **real-time visual indication of intrusion** using both the LED and the LCD display.

Key Features

· **ARM7 Architecture:** Uses the 32-bit LPC2148 microcontroller for fast and efficient processing.
· **Ultrasonic Sensing:** HC-SR04 sensor is triggered via P0.0 and echo is received at P0.1 to measure **echo pulse duration**.
· **Threshold Detection:** A pulse count threshold (**2 < count < 3500**) is used to distinguish between safe and intruder states.
· **LED Alert Indicator:** An LED on P0.2 turns ON immediately when an intruder is detected and OFF when safe.
· **LCD Status Display:** A 16×2 LCD displays either **"STATUS: SAFE"** or **"INTRUDER ALERT!"** based on the detected condition.
· **Efficient Display Refresh:** The LCD updates only on **state change**, avoiding unnecessary writes and improving system efficiency.

3.2.1 LPC2148 Assembly Code

```
AREA IntruderAlarm, CODE, READONLY
   EXPORT __main

__main
   B Reset_Handler

; --- 2. PIN DEFINITIONS ---
IOPIN0_OFF EQU 0x00
IOSET0_OFF EQU 0x04
IODIR0_OFF EQU 0x08
IOCLR0_OFF EQU 0x0C

TRIG_PIN   EQU (1<<0)   ; P0.0
ECHO_PIN   EQU (1<<1)   ; P0.1
LED_PIN    EQU (1<<2)   ; P0.2
LCD_RS     EQU (1<<10)  ; P0.10
LCD_RW     EQU (1<<11)  ; P0.11
```

```
LCD_EN     EQU (1<<12)  ; P0.12

; --- 3. SYSTEM BOOT ---
Reset_Handler
   LDR SP, =0x40007F00

   LDR R11, =0xE0028000

   LDR R0, =0xE002C000
   MOV R1, #0
   STR R1, [R0]

   LDR R1, [R11, #IODIR0_OFF]
   ORR R1, R1, #TRIG_PIN
   ORR R1, R1, #LED_PIN
   LDR R2, =0x00FF1C00
   ORR R1, R1, R2
   BIC R1, R1, #ECHO_PIN
   STR R1, [R11, #IODIR0_OFF]

   BL LCD_INIT

   MOV R8, #0

MAIN_LOOP
   MOV R0, #TRIG_PIN
   STR R0, [R11, #IOSET0_OFF]
   LDR R1, =500

TRIG_DELAY
   SUBS R1, R1, #1
   BNE TRIG_DELAY
   STR R0, [R11, #IOCLR0_OFF]

   LDR R4, =0

WAIT_HIGH
   LDR R1, [R11, #IOPIN0_OFF]
   TST R1, #ECHO_PIN
```

```
    BNE ECHO_IS_HIGH
    ADD R4, R4, #1
    LDR R2, =10000
    CMP R4, R2
    BGT FAILSAFE
    B WAIT_HIGH

ECHO_IS_HIGH
    LDR R5, =0

COUNT_PULSE
    LDR R1, [R11, #IOPIN0_OFF]
    TST R1, #ECHO_PIN
    BEQ CHECK_DIST
    ADD R5, R5, #1
    LDR R2, =20000
    CMP R5, R2
    BGT CHECK_DIST
    B COUNT_PULSE

CHECK_DIST
    CMP R5, #2
    BLE SET_SAFE
    LDR R2, =3500
    CMP R5, R2
    BGE SET_SAFE

SET_INTRUDER
    MOV R8, #1
    MOV R0, #LED_PIN
    STR R0, [R11, #IOSET0_OFF]
    B UPDATE_LCD

SET_SAFE
FAILSAFE
    MOV R8, #0
    MOV R0, #LED_PIN
    STR R0, [R11, #IOCLR0_OFF]
```

```
UPDATE_LCD
   CMP R8, R9
   BEQ LOOP_END
   MOV R9, R8

   MOV R0, #0x01
   BL LCD_CMD
   MOV R0, #0x80
   BL LCD_CMD

   CMP R8, #1
   BEQ PRINT_INTRUDER

PRINT_SAFE
   LDR R0, =MSG_SAFE
   BL LCD_PRINT_STR
   B LOOP_END

PRINT_INTRUDER
   LDR R0, =MSG_INTR
   BL LCD_PRINT_STR

LOOP_END
   LDR R6, =20000

MAIN_DELAY
   SUBS R6, R6, #1
   BNE MAIN_DELAY
   B MAIN_LOOP

; ========================================
; --- LCD SUBROUTINES ---
; ========================================

LCD_CMD
   PUSH {LR}
   LDR R1, =0x00FF0000
   STR R1, [R11, #IOCLR0_OFF]
   LSL R2, R0, #16
```

```
    STR R2, [R11, #IOSET0_OFF]

    MOV R1, #(LCD_RS :OR: LCD_RW)
    STR R1, [R11, #IOCLR0_OFF]

    MOV R1, #LCD_EN
    STR R1, [R11, #IOSET0_OFF]
    BL DELAY_SHORT
    STR R1, [R11, #IOCLR0_OFF]

    BL DELAY_LONG
    POP {PC}

LCD_DATA
    PUSH {LR}
    LDR R1, =0x00FF0000
    STR R1, [R11, #IOCLR0_OFF]
    LSL R2, R0, #16
    STR R2, [R11, #IOSET0_OFF]

    MOV R1, #LCD_RS
    STR R1, [R11, #IOSET0_OFF]
    MOV R1, #LCD_RW
    STR R1, [R11, #IOCLR0_OFF]

    MOV R1, #LCD_EN
    STR R1, [R11, #IOSET0_OFF]
    BL DELAY_SHORT
    STR R1, [R11, #IOCLR0_OFF]

    BL DELAY_LONG
    POP {PC}

LCD_INIT
    PUSH {LR}
    BL DELAY_LONG
    MOV R0, #0x38
    BL LCD_CMD
    MOV R0, #0x0C
```

```
    BL LCD_CMD
    MOV R0, #0x01
    BL LCD_CMD
    MOV R0, #0x06
    BL LCD_CMD
    POP {PC}

LCD_PRINT_STR
    PUSH {R4, LR}
    MOV R4, R0

PRINT_LOOP
    LDRB R0, [R4], #1
    CMP R0, #0
    BEQ PRINT_DONE
    BL LCD_DATA
    B PRINT_LOOP

PRINT_DONE
    POP {R4, PC}

; ========================================
; --- DELAY SUBROUTINES ---
; ========================================

DELAY_SHORT
    LDR R7, =200

DS_LOOP
    SUBS R7, R7, #1
    BNE DS_LOOP
    BX LR

DELAY_LONG
    LDR R7, =10000

DL_LOOP
    SUBS R7, R7, #1
    BNE DL_LOOP
```

```
    BX LR

; ========================================
; --- DATA POOL ---
; ========================================

AREA Strings, DATA, READONLY
MSG_SAFE DCB "STATUS: SAFE", 0
MSG_INTR DCB "INTRUDER ALERT!", 0
ALIGN

END
```

3.2.2 LPC2148 Embedded C Code

```
#include <lpc214x.h>

// --- LCD Control Pin Macros ---
#define RS (1<<10) // P0.10
#define RW (1<<11) // P0.11
#define EN (1<<12) // P0.12

// YOUR EXACT WORKING DELAY
void delay(unsigned int loops) {
   volatile unsigned int i, j;
   for(i = 0; i < loops; i++) {
      for(j = 0; j < 2000; j++);
   }
}

// --- LCD FUNCTIONS ---
void lcd_cmd(unsigned char cmd) {
   IOCLR0 = 0x00FF0000;
   IOSET0 = ((unsigned int)cmd << 16);
   IOCLR0 = RS;
   IOCLR0 = RW;
   IOSET0 = EN;
   delay(1);
```

```
    IOCLR0 = EN;
    delay(2);
}

void lcd_data(unsigned char data) {
    IOCLR0 = 0x00FF0000;
    IOSET0 = ((unsigned int)data << 16);
    IOSET0 = RS;
    IOCLR0 = RW;
    IOSET0 = EN;
    delay(1);
    IOCLR0 = EN;
    delay(2);
}

void lcd_init(void) {
    IODIR0 |= 0x00FF1C00;
    delay(20);

    lcd_cmd(0x38);
    lcd_cmd(0x0C);
    lcd_cmd(0x01);
    delay(5);
    lcd_cmd(0x06);
}

void lcd_print(char *str) {
    while(*str != '\0') {
        lcd_data(*str);
        str++;
    }
}

int main() {
    unsigned int distance_counter;
    unsigned int timeout;

    int current_state = 0;
    int last_state = -1;
```

CHAPTER 3

```
PINSEL0 = 0x00000000;
IODIR0 |= (1<<0);
IODIR0 &= ~(1<<1);
IODIR0 |= (1<<2);

IOCLR0 = (1<<2);

lcd_init();

while(1) {
   IOSET0 = (1<<0);
   delay(1);
   IOCLR0 = (1<<0);

   timeout = 0;
   while(!(IOPIN0 & (1<<1))) {
      timeout++;
      if(timeout > 50000) break;
   }

   if(timeout <= 50000) {
      distance_counter = 0;
      while(IOPIN0 & (1<<1)) {
         distance_counter++;
         if(distance_counter > 50000) break;
      }

      if(distance_counter > 2 && distance_counter < 3300) {
         current_state = 1;
         IOSET0 = (1<<2);
      } else {
         current_state = 0;
         IOCLR0 = (1<<2);
      }
   } else {
      current_state = 0;
      IOCLR0 = (1<<2);
   }
```

```
        if(current_state != last_state) {
            lcd_cmd(0x01);
            delay(5);
            lcd_cmd(0x80);

            if(current_state == 1) {
                lcd_print("INTRUDER ALERT!");
            } else {
                lcd_print("STATUS: SAFE");
            }

            last_state = current_state;
        }

        delay(10);
    }
}
```

3.3 Observations for LPC2148

· **Real-Time Detection:** The system continuously monitors the surroundings in a loop and responds instantly to any change in **echo pulse duration**, providing real-time intrusion detection without noticeable delay.

· **Dual Output Response:** Upon detecting an intruder, both the LED and LCD respond simultaneously, confirming that the GPIO output control via **IOSET0 and IOCLR0 registers** works accurately for multiple peripherals.

· **Stable Threshold Performance:** The **pulse count threshold (2 < count < 3500)** effectively differentiates between nearby intruders and distant or absent objects, while the failsafe condition prevents false triggers due to sensor noise or timeout errors.

· **LCD State Accuracy:** The LCD correctly switches between **"STATUS: SAFE"** and **"INTRUDER ALERT!"** only when a state change occurs, confirming that the state comparison logic between **R8 and R9 registers** works efficiently without unnecessary refreshes.

CHAPTER 3

3.4 Comparison Between 8051 and LPC2148

Feature	8051 System	LPC2148 System
Architecture	8-bit CISC	32-bit ARM7 RISC
Trigger Pin	P3.1	P0.0
Echo Pin	P3.2	P0.1
LCD Data Port	Port 2 (8-bit)	P0.16–P0.23 (bit-shifted)
LCD Control Pins	P1.0, P1.1, P1.2	P0.10, P0.11, P0.12
Measurement Method	Loop count using DJNZ	Loop count using SUBS
Threshold Value	150 counts	2–3500 counts
LED Indicator	Not used	P0.2
LCD Refresh	Every loop cycle	Only on state change
Programming Language	Assembly (8051)	Assembly (ARM)
Processing Speed	Moderate	High
Hardware Complexity	Simple	Simple

Table 3.1 Comparison Between 8051 and LPC2148

3.5 Source Code Repository for LPC2148

The complete source code for the LPC2148 implementation (**ARM Assembly**) is provided in the following repository:
https://gist.github.com/sabbyX/93d62e19bc814453c52915c537f079b7

The complete source code for the LPC2148 implementation (**Embedded C**) is provided in the following repository:
https://gist.github.com/sabbyX/6aebbe94707321887850ec2ce4171ec9

CHAPTER 4

Conclusion

The ultrasonic sensor-based intruder detection system was successfully designed and implemented using both the **8051 microcontroller** and the **LPC2148 ARM7 microcontroller**. The system detects the presence of objects within a predefined range using the **HC-SR04 ultrasonic sensor** and provides real-time indication through a **16×2 LCD display**, along with an LED alert in the LPC2148 implementation.

In the 8051-based implementation, the ultrasonic sensor is interfaced through **Port 3.1 (trigger)** and **Port 3.2 (echo)**. The microcontroller measures the **echo pulse duration using a software-based counter** and compares it with a threshold value of **150** to detect intrusion, displaying either **"INTRUDER"** or **"SAFE"** on the LCD.

The LPC2148-based implementation improves performance using a **32-bit ARM7 core**, with a wider threshold range (**2 to 3500 counts**) for more reliable detection. An **LED indicator** is also used for alert.

The project shows that the **LPC2148 provides better speed, efficiency, and reliability** compared to the 8051. From a societal perspective, such systems are useful in **home security, industrial monitoring, and automated access control**, and can be extended to include **wireless alerts and IoT-based monitoring**.

Overall, the project successfully meets its objectives and demonstrates a reliable intruder detection system using ultrasonic sensing and embedded technology.

Bibliography

[1] K. Andrews and B. Rajiv, “On some applications of eigenvalues of Toeplitz matrices,” *Journal of Mathematical Analysis and Applications*, vol. 56, no. 2, pp. 237–239, 2007.

[2] C. C. Chang, “Algebraic analysis of many valued logics,” *Transactions of the American Mathematical Society*, vol. 88, pp. 467–490, 1958.

[3] B. Gerla, “Automata over MV-algebras,” in *Proceedings of the 34th International Symposium on Multiple-Valued Logic (ISMVL ’04)*, Washington, DC, USA, 2004, pp. 49–54.

[4] G. H. Golub and C. F. Van Loan, *Matrix Computations*, 2nd ed., Johns Hopkins University Press, 1989.

[5] M. A. Mazidi, J. G. Mazidi, and R. D. McKinlay, *The 8051 Microcontroller and Embedded Systems*, Pearson Education.

[6] NXP Semiconductors, *LPC2148 User Manual*.

[7] HC-SR04 Ultrasonic Sensor Datasheet.