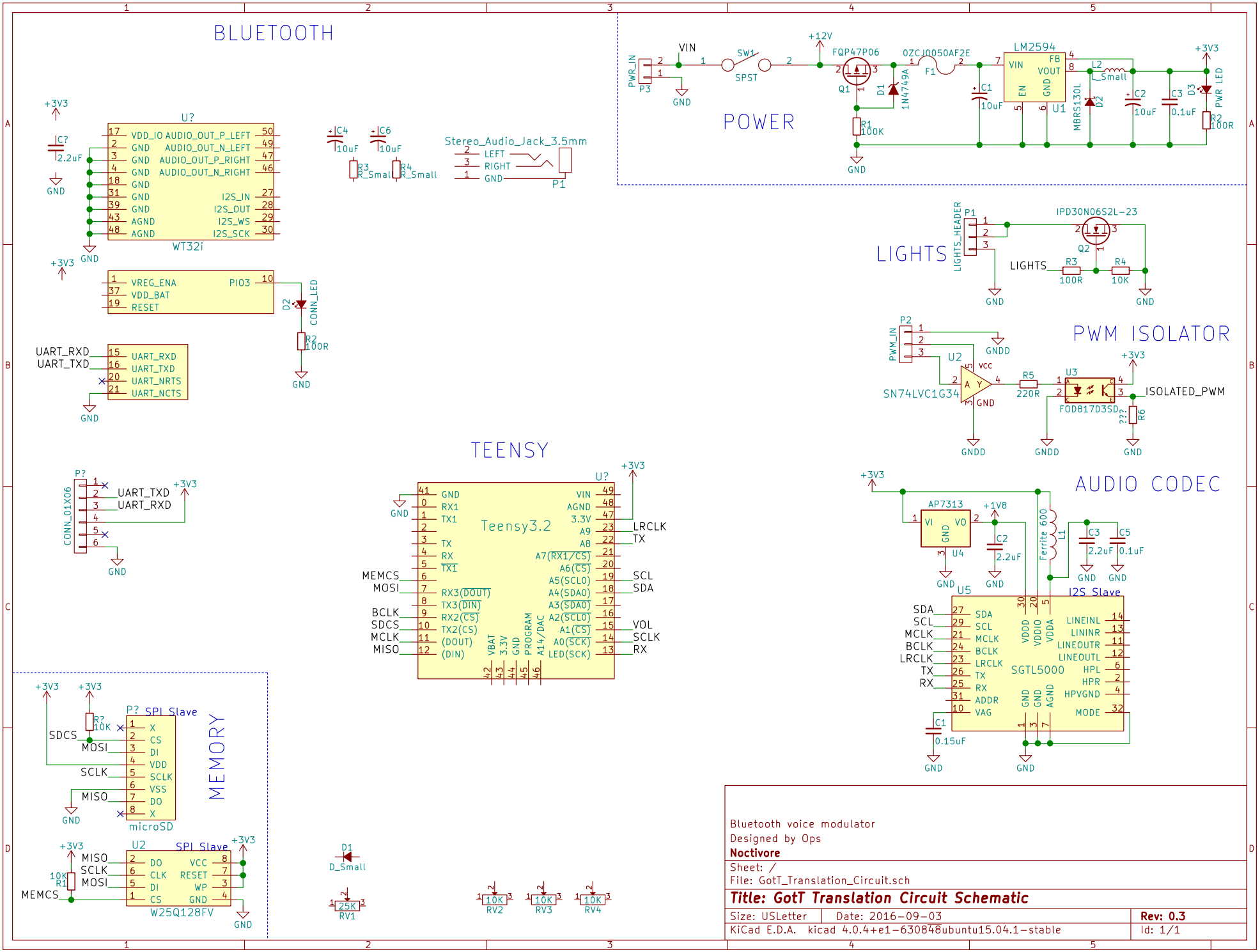

Bluetooth voice modulator
Designed by Ops
Noctivore
Sheet: /
File: GotT_Translation_Circuit.sch

Title: GotT Translation Circuit Schematic

Size: USLetter	Date: 2016-09-03	Rev: 0.3
KiCad E.D.A. kicad 4.0.4+e1-630848ubuntu15.04.1-stable		Id: 1/1