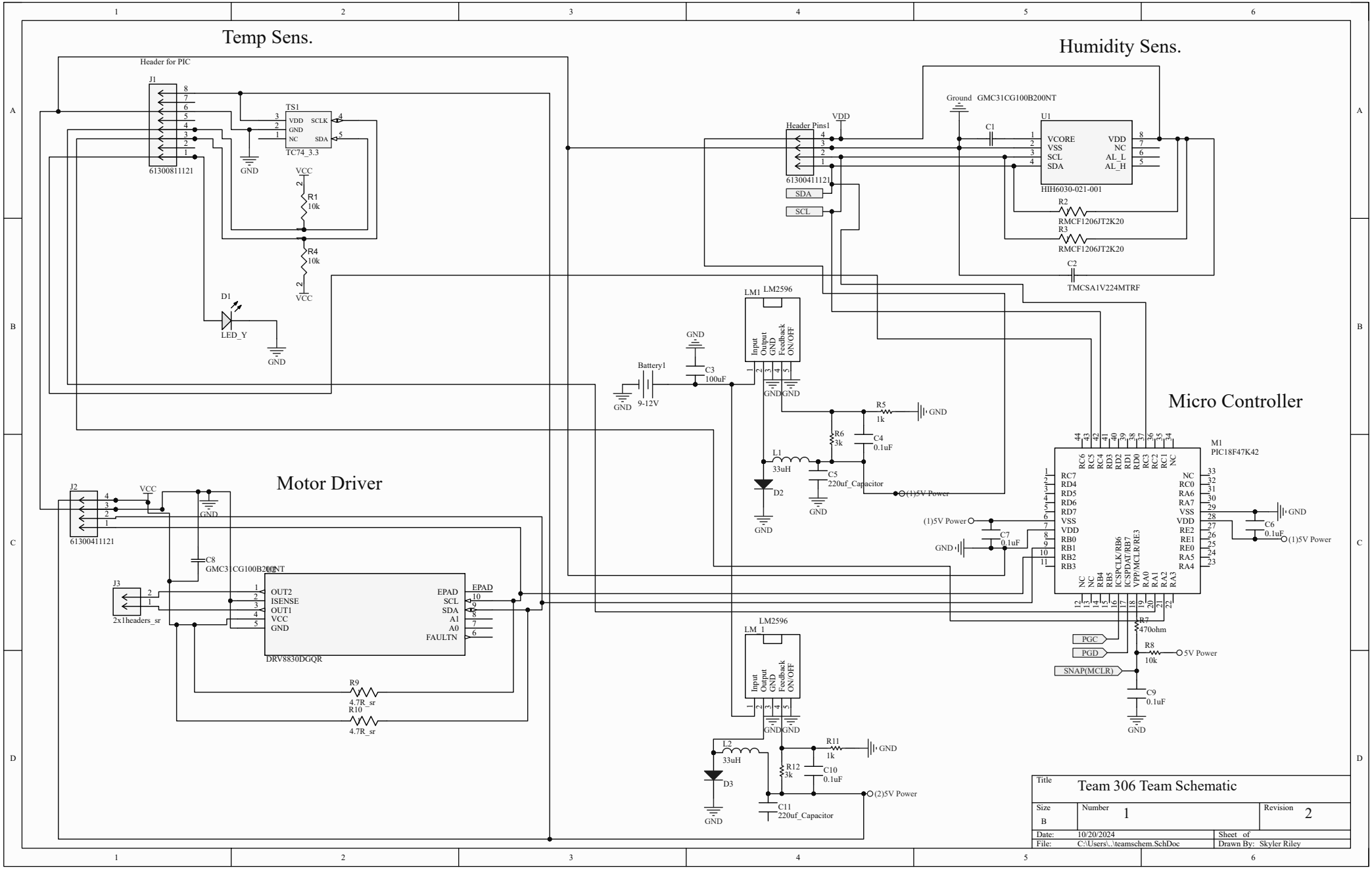

Title	Team 306 Team Schematic	
Size B	Number 1	Revision 2
Date: 10/20/2024		Sheet of
File: C:\Users\..\teamschem.SchDoc		Drawn By: Skyler Riley