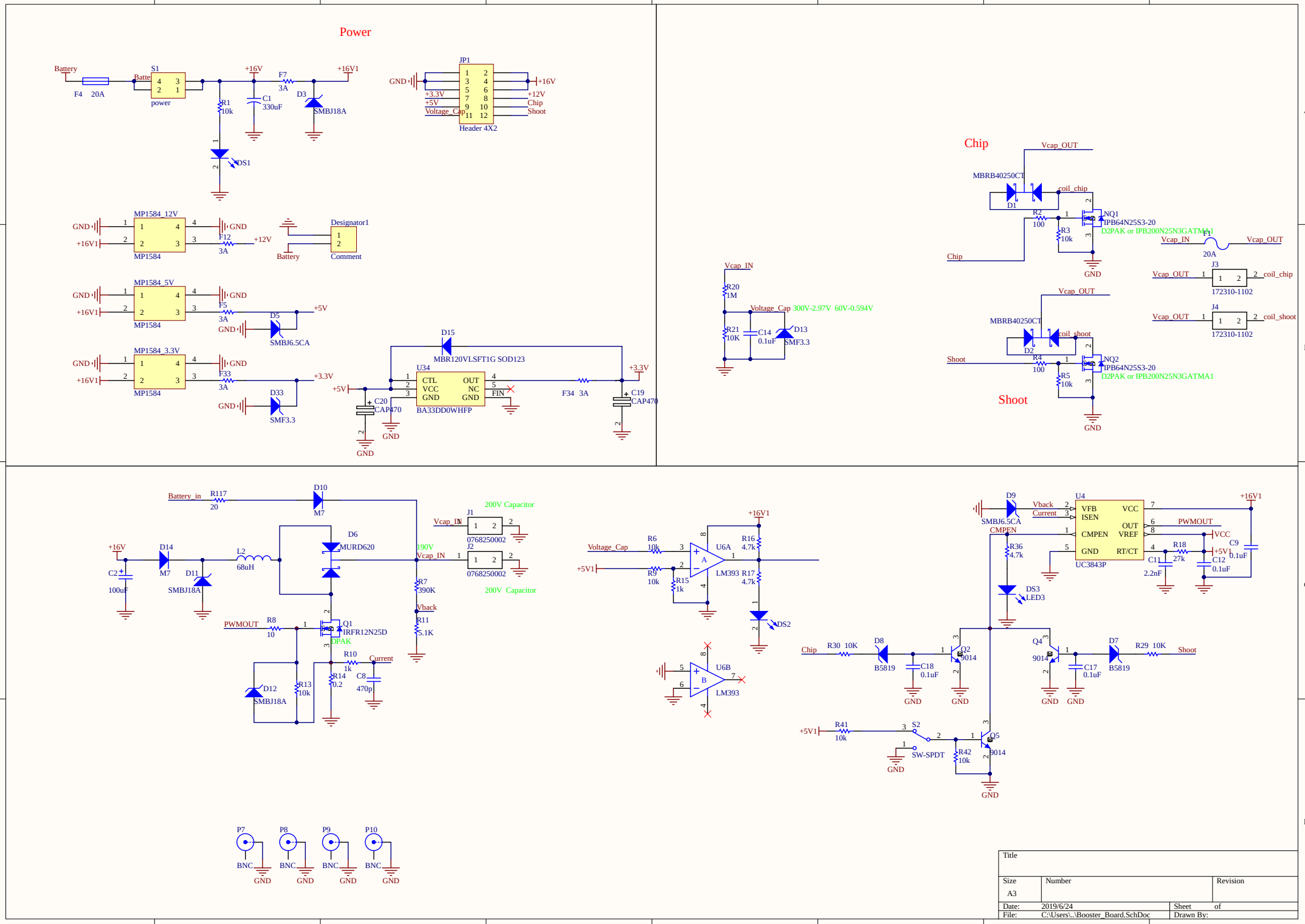
Power
Battery
F4 20A
S1
power
+16V
R1 10k
C1 330uF
F7 3A
+16V1
D3 SMBJ18A
DS1
JP1
Header 4X2
GND
+3.3V
+5V
Voltage_Cap
+16V
+12V
Chip
Shoot
MP1584_12V
MP1584
F12 3A
+12V
Designator1
Comment
MP1584_5V
F5 3A
+5V
D5 SMBJ6.5CA
MP1584_3.3V
F33 3A
+3.3V
D33 SMF3.3
D15 MBR120VLSFT1G SOD123
U34 BA33DD0WHFP
CTL VCC GND OUT NC GND FIN
C20 CAP470
F34 3A
C19 CAP470
Chip
Vcap_OUT
MBRB40250CT D1
coil_chip
R2 100
R3 10k
NQ1 IPB64N25S3-20
D2PAK or IPB200N25N3GATMA1
F1 20A
Vcap_IN
J3 172310-1102
J4 172310-1102
coil_shoot
D2
R4 100
R5 10k
NQ2 IPB64N25S3-20
Shoot
R20 1M
R21 10K
C14 0.1uF
D13 SMF3.3
Voltage_Cap 300V-2.97V 60V-0.594V
Battery_in
R117 20
D10 M7
200V Capacitor
J1 0768250002
J2 0768250002
190V
Vcap_IN
D14 M7
L2 68uH
D6 MURD620
C2 100uF
D11 SMBJ18A
R7 390K
Vback
R11 5.1K
PWMOUT
R8 10
Q1 IRFR12N25D
DPAK
R10 1k
Current
R14 0.2
C8 470p
D12 SMBJ18A
R13 10k
R6 10k
R9 10k
R15 1k
U6A LM393
R16 4.7k
R17 4.7k
DS2
U6B LM393
D9 SMBJ6.5CA
CMPEN
U4 UC3843P
VFB ISEN CMPEN GND VCC OUT VREF RT/CT
R36 4.7k
DS3 LED3
C11 2.2nF
R18 27k
C9 0.1uF
C12 0.1uF
R30 10K
D8 B5819
C18 0.1uF
Q2 9014
Q4 9014
C17 0.1uF
D7 B5819
R29 10K
R41 10k
S2 SW-SPDT
R42 10k
Q5 9014
P7 BNC
P8 BNC
P9 BNC
P10 BNC
Title
Size A3
Number
Revision
Date: 2019/6/24
Sheet of
File: C:\Users\..\Booster_Board.SchDoc
Drawn By:

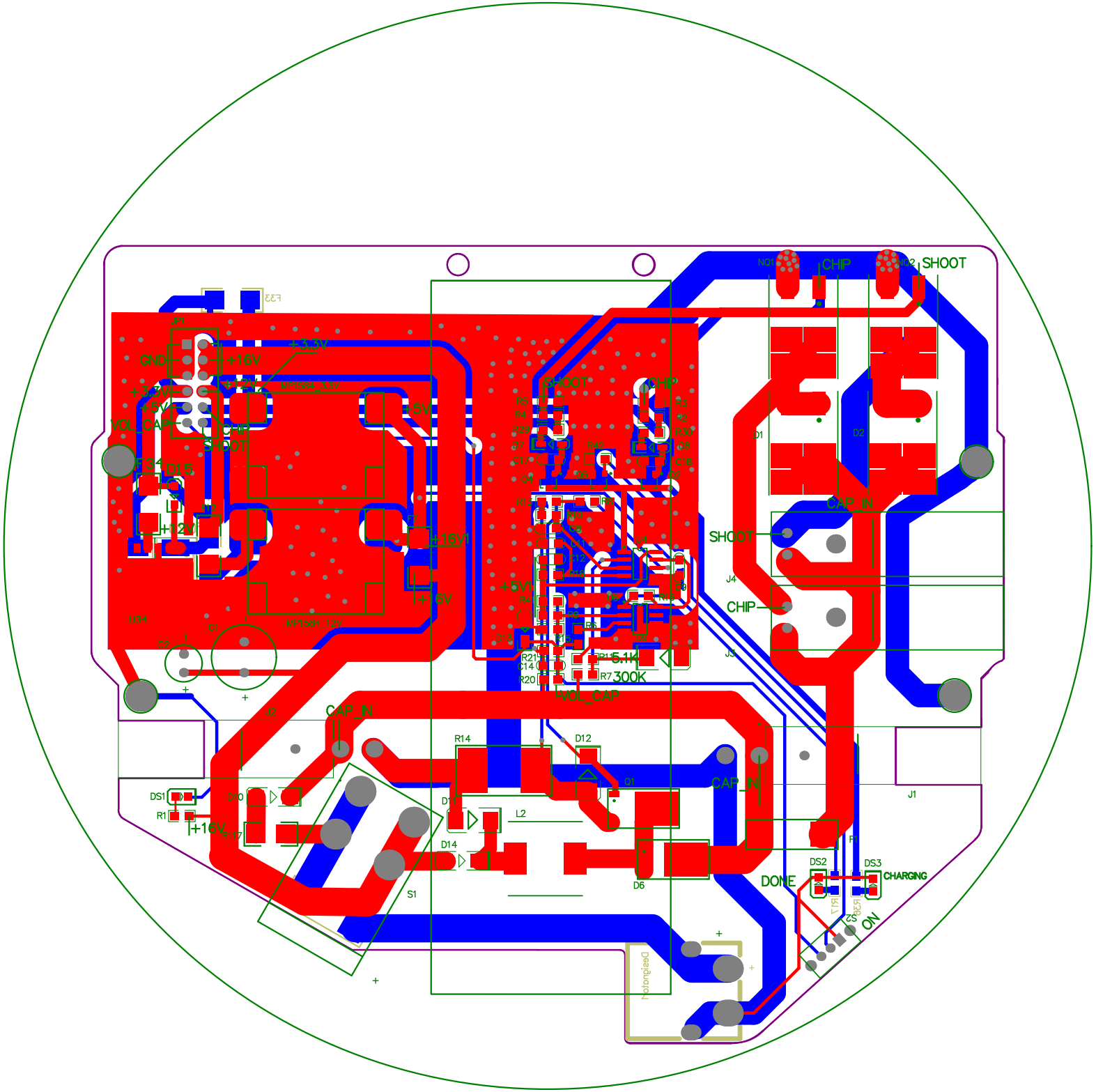
SHOOT
CHIP
CAP_IN
DONE
CHARGING
ON
VOL_CAP
GND
+16V
+5V
+12V
+3.3V
MP1584_3.3V
MP1584_12V
5.1K
300K
J1
J2
J3
J4
J5
J6
J7
J8
J9
J10
J11
J12
J13
J14
J15
J16
J17
J18
J19
J20
J21
J22
J23
J24
J25
J26
J27
J28
J29
J30
J31
J32
J33
J34
J35
J36
J37
J38
J39
J40
J41
J42
J43
J44
J45
J46
J47
J48
J49
J50
J51
J52
J53
J54
J55
J56
J57
J58
J59
J60
J61
J62
J63
J64
J65
J66
J67
J68
J69
J70
J71
J72
J73
J74
J75
J76
J77
J78
J79
J80
J81
J82
J83
J84
J85
J86
J87
J88
J89
J90
J91
J92
J93
J94
J95
J96
J97
J98
J99
J100
J101
J102
J103
J104
J105
J106
J107
J108
J109
J110
J111
J112
J113
J114
J115
J116
J117
J118
J119
J120
J121
J122
J123
J124
J125
J126
J127
J128
J129
J130
J131
J132
J133
J134
J135
J136
J137
J138
J139
J140
J141
J142
J143
J144
J145
J146
J147
J148
J149
J150
J151
J152
J153
J154
J155
J156
J157
J158
J159
J160
J161
J162
J163
J164
J165
J166
J167
J168
J169
J170
J171
J172
J173
J174
J175
J176
J177
J178
J179
J180
J181
J182
J183
J184
J185
J186
J187
J188
J189
J190
J191
J192
J193
J194
J195
J196
J197
J198
J199
J200
J201
J202
J203
J204
J205
J206
J207
J208
J209
J210
J211
J212
J213
J214
J215
J216
J217
J218
J219
J220
J221
J222
J223
J224
J225
J226
J227
J228
J229
J230
J231
J232
J233
J234
J235
J236
J237
J238
J239
J240
J241
J242
J243
J244
J245
J246
J247
J248
J249
J250
J251
J252
J253
J254
J255
J256
J257
J258
J259
J260
J261
J262
J263
J264
J265
J266
J267
J268
J269
J270
J271
J272
J273
J274
J275
J276
J277
J278
J279
J280
J281
J282
J283
J284
J285
J286
J287
J288
J289
J290
J291
J292
J293
J294
J295
J296
J297
J298
J299
J300
J301
J302
J303
J304
J305
J306
J307
J308
J309
J310
J311
J312
J313
J314
J315
J316
J317
J318
J319
J320
J321
J322
J323
J324
J325
J326
J327
J328
J329
J330
J331
J332
J333
J334
J335
J336
J337
J338
J339
J340
J341
J342
J343
J344
J345
J346
J347
J348
J349
J350
J351
J352
J353
J354
J355
J356
J357
J358
J359
J360
J361
J362
J363
J364
J365
J366
J367
J368
J369
J370
J371
J372
J373
J374
J375
J376
J377
J378
J379
J380
J381
J382
J383
J384
J385
J386
J387
J388
J389
J390
J391
J392
J393
J394
J395
J396
J397
J398
J399
J400
J401
J402
J403
J404
J405
J406
J407
J408
J409
J410
J411
J412
J413
J414
J415
J416
J417
J418
J419
J420
J421
J422
J423
J424
J425
J426
J427
J428
J429
J430
J431
J432
J433
J434
J435
J436
J437
J438
J439
J440
J441
J442
J443
J444
J445
J446
J447
J448
J449
J450
J451
J452
J453
J454
J455
J456
J457
J458
J459
J460
J461
J462
J463
J464
J465
J466
J467
J468
J469
J470
J471
J472
J473
J474
J475
J476
J477
J478
J479
J480
J481
J482
J483
J484
J485
J486
J487
J488
J489
J490
J491
J492
J493
J494
J495
J496
J497
J498
J499
J500
J501
J502
J503
J504
J505
J506
J507
J508
J509
J510
J511
J512
J513
J514
J515
J516
J517
J518
J519
J520
J521
J522
J523
J524
J525
J526
J527
J528
J529
J530
J531
J532
J533
J534
J535
J536
J537
J538
J539
J540
J541
J542
J543
J544
J545
J546
J547
J548
J549
J550
J551
J552
J553
J554
J555
J556
J557
J558
J559
J560
J561
J562
J563
J564
J565
J566
J567
J568
J569
J570
J571
J572
J573
J574
J575
J576
J577
J578
J579
J580
J581
J582
J583
J584
J585
J586
J587
J588
J589
J590
J591
J592
J593
J594
J595
J596
J597
J598
J599
J600
J601
J602
J603
J604
J605
J606
J607
J608
J609
J610
J611
J612
J613
J614
J615
J616
J617
J618
J619
J620
J621
J622
J623
J624
J625
J626
J627
J628
J629
J630
J631
J632
J633
J634
J635
J636
J637
J638
J639
J640
J641
J642
J643
J644
J645
J646
J647
J648
J649
J650
J651
J652
J653
J654
J655
J656
J657
J658
J659
J660
J661
J662
J663
J664
J665
J666
J667
J668
J669
J670
J671
J672
J673
J674
J675
J676
J677
J678
J679
J680
J681
J682
J683
J684
J685
J686
J687
J688
J689
J690
J691
J692
J693
J694
J695
J696
J697
J698
J699
J700
J701
J702
J703
J704
J705
J706
J707
J708
J709
J710
J711
J712
J713
J714
J715
J716
J717
J718
J719
J720
J721
J722
J723
J724
J725
J726
J727
J728
J729
J730
J731
J732
J733
J734
J735
J736
J737
J738
J739
J740
J741
J742
J743
J744
J745
J746
J747
J748
J749
J750
J751
J752
J753
J754
J755
J756
J757
J758
J759
J760
J761
J762
J763
J764
J765
J766
J767
J768
J769
J770
J771
J772
J773
J774
J775
J776
J777
J778
J779
J780
J781
J782
J783
J784
J785
J786
J787
J788
J789
J790
J791
J792
J793
J794
J795
J796
J797
J798
J799
J800
J801
J802
J803
J804
J805
J806
J807
J808
J809
J810
J811
J812
J813
J814
J815
J816
J817
J818
J819
J820
J821
J822
J823
J824
J825
J826
J827
J828
J829
J830
J831
J832
J833
J834
J835
J836
J837
J838
J839
J840
J841
J842
J843
J844
J845
J846
J847
J848
J849
J850
J851
J852
J853
J854
J855
J856
J857
J858
J859
J860
J861
J862
J863
J864
J865
J866
J867
J868
J869
J870
J871
J872
J873
J874
J875
J876
J877
J878
J879
J880
J881
J882
J883
J884
J885
J886
J887
J888
J889
J890
J891
J892
J893
J894
J895
J896
J897
J898
J899
J900
J901
J902
J903
J904
J905
J906
J907
J908
J909
J910
J911
J912
J913
J914
J915
J916
J917
J918
J919
J920
J921
J922
J923
J924
J925
J926
J927
J928
J929
J930
J931
J932
J933
J934
J935
J936
J937
J938
J939
J940
J941
J942
J943
J944
J945
J946
J947
J948
J949
J950
J951
J952
J953
J954
J955
J956
J957
J958
J959
J960
J961
J962
J963
J964
J965
J966
J967
J968
J969
J970
J971
J972
J973
J974
J975
J976
J977
J978
J979
J980
J981
J982
J983
J984
J985
J986
J987
J988
J989
J990
J991
J992
J993
J994
J995
J996
J997
J998
J999
J1000