BRD3601A - LG990 MCU Plugin

Board Function	Page
Front Page	1
EFM32 Microcontroller	2
EFM32 Power	3
EFM32 Connectors	4
Signal Assignments #1	5
Signal Assignments #2	6
Misc Connections	7

Revision History

Rev.	Description
A00	Initial Release. PCB is PCB3600 rev. A02
B00	Updated PCB to PCB3601 rev. A00, Changed LFXTAL and C18
B01	Updated EFM32 to Leopard Gecko Rev.D, Changed switch voltage to 3.6V

PCB1

PCB3601

TOP

Schematic Title: BRD3601A - LG990 MCU Plugin			
Page Title: Front Page			
Designed: AG	Approved: JNO		
Size: A3	BOM Doc No: <Cage Code>	Document number: BRD3601A	Revision: B01
Design Created Date: Wednesday, December 03, 2008		Sheet Created Date: Tuesday, February 17, 2009	Sheet Modified Date: Thursday, April 26, 2012
			Sheet 1 of 7

MCU_PA[15..0]
MCU_PB[15..0]
MCU_PC[11..0]

U1A

MCU_PA0	C2	A0 / LCD_SEG13 / EBI_AD9 / TIM0_CC0 #0,1 / TIM0_CC0 #4 / PRS_CH0 #0 / I2C0_SDA #0 / LEU0_RX #4 / GPIO_EM4WU #0
MCU_PA1	C1	A1 / LCD_SEG14 / EBI_AD10 / TIM0_CC1 #0,1 / PRS_CH1 #0 / I2C0_SCL #0 / CMU_OUT1 # 0
MCU_PA2	D2	A2 / LCD_SEG15 / DBG_TDO #3 / EBI_AD11 / TIM0_CC2 #0,1 / CMU_OUT0 #0
MCU_PA3	D1	A3 / LCD_SEG16 / DBG_TDI #3 / EBI_AD12 / TIM0_CCC0 #0 / LES_ALTEX2 / U0_TX #2
MCU_PA4	E3	A4 / LCD_SEG17 / DBG_TD2 #3 / EBI_AD13 / TIM0_CCC1 #0 / LES_ALTEX3 / U0_RX #2
MCU_PA5	E2	A5 / LCD_SEG18 / DBG_TD3 #3 / EBI_AD14 / TIM0_CCC2 #0 / LES_ALTEX4 / LEU1_TX #1
MCU_PA6	E1	A6 / LCD_SEG19 / DBG_TCLK #3 / EBI_AD15 / LEU1_RX #1 / GPIO_EM4WU #1
MCU_PA7	H4	A7 / LCD_SEG35 / EBI_CSTFT
MCU_PA8	H5	A8 / LCD_SEG36 / EBI_DCLK / TIM2_CC0 #0
MCU_PA9	J5	A9 / LCD_SEG37 / EBI_DTEN / TIM2_CC1 #0
MCU_PA10	J6	A10 / LCD_SEG38 / EBI_VSNC / TIM2_CC2 #0
MCU_PA11	K5	A11 / LCD_SEG39 / EBI_HSNC
MCU_PA12	J4	A12 / LCD_BCAP_P / EBI_A00 / TIM2_CC0 #1
MCU_PA13	K3	A13 / LCD_BCAP_N / EBI_A01 / TIM2_CC1 #1
MCU_PA14	L3	A14 / LCD_BEXT / EBI_A02 / TIM2_CC2 #1
MCU_PA15	B1	A15 / LCD_SEG12 / EBI_AD8 / TIM3_CC2 #0
MCU_PB0	E4	B0 / LCD_SEG32 / EBI_A16 / TIM1_CC0 #2
MCU_PB1	F1	B1 / LCD_SEG33 / EBI_A17 / TIM1_CC1 #2
MCU_PB2	F2	B2 / LCD_SEG34 / EBI_A18 / TIM1_CC2 #2
MCU_PB3	F3	B3 / LCD_SEG20 / LCD_COM4 / EBI_A19 / US2_TX #1 / PCNT1_S0 #1
MCU_PB4	F4	B4 / LCD_SEG21 / LCD_COM5 / EBI_A20 / US2_RX #1 / PCNT1_S1 #1
MCU_PB5	G1	B5 / LCD_SEG22 / LCD_COM6 / EBI_A21 / US2_CLK #1
MCU_PB6	G2	B6 / LCD_SEG23 / LCD_COM7 / EBI_A22 / US2_CS #1
MCU_PB7	K1	B7 / LFXTAL_P / TIM1_CC0 #3 / US1_CLK #0 / US0_TX #4
MCU_PB8	L1	B8 / LFXTAL_N / TIM1_CC1 #3 / US1_CS #0 / US0_RX #4
MCU_PB9	J7	B9 / EBI_A03 / U1_TX #2
MCU_PB10	J8	B10 / EBI_A04 / U1_RX #2
MCU_PB11	L5	B11 / DAC0_OUT0 / OPA_OUT0 #0 / LET0_O0 #1 / TIM1_CC2 #3 / I2C1_SDA #1
MCU_PB12	L6	B12 / DAC0_OUT1 / OPA_OUT1 #0 / LET0_O1 #1 / I2C1_SCL #1
MCU_PB13	L8	B13 / HFXTAL_P / LEU0_TX #1 / US0_CLK #4 / US0_CLK #5
MCU_PB14	L9	B14 / HFXTAL_N / LEU0_RX #1 / US0_CS #4 / US0_CS #5
MCU_PB15	D3	B15 / DBG_TD2 #1
MCU_PC0	H1	C0 / ACMP0_CH0 / OPA_OUT0 #1 / EBI_A23 / TIM0_CC1 #4 / PRS_CH2 #0 / US1_TX #0 / I2C0_SDA #4 / US0_TX #5 / PCNT0_S0 #2
MCU_PC1	J1	C1 / ACMP0_CH1 / OPA_OUT0 #2 / EBI_A24 / TIM0_CC2 #4 / PRS_CH3 #0 / US1_RX #0 / I2C0_SCL #4 / US0_RX #5 / PCNT0_S1 #2
MCU_PC2	H2	C2 / ACMP0_CH2 / OPA_OUT0 #3 / EBI_A25 / TIM0_CCC0 #4 / US2_TX #0
MCU_PC3	J2	C3 / ACMP0_CH3 / OPA_OUT0 #4 / EBI_NANDRen / TIM0_CCC1 #4 / US2_RX #0
MCU_PC4	K2	C4 / ACMP0_CH4 / OPA_P0 / EBI_A26 / LET0_O0 #3 / TIM0_CCC2 #4 / US2_CLK #0 / I2C1_SDA #0 / PCNT1_S0 #0
MCU_PC5	L2	C5 / ACMP0_CH5 / OPA_N0 / EBI_NANDWen / LET0_O1 #3 / US2_CS #0 / I2C1_SCL #0 / PCNT1_S1 #0
MCU_PC6	G10	C6 / ACMP0_CH6 / DBG_TCLK #2 / EBI_A05 / LEU1_TX #0 / I2C0_SDA #2
MCU_PC7	G11	C7 / ACMP0_CH7 / DBG_TDO #2 / EBI_A06 / LEU1_RX #0 / I2C0_SCL #2
MCU_PC8	D10	C8 / ACMP1_CH0 / EBI_A15 / TIM2_CC0 #2 / US0_CS #2
MCU_PC9	D11	C9 / ACMP1_CH1 / EBI_A09 #1,2 / TIM2_CC1 #2 / US0_CLK #2 / GPIO_EM4WU #2
MCU_PC10	C10	C10 / ACMP1_CH2 / TM0 / EBI_A10 #1,2 / TIM2_CC2 #2 / US0_RX #2
MCU_PC11	C11	C11 / ACMP1_CH3 / TM1 / EBI_ALE #1,2 / US0_TX #2

MCU_PD[15..0]
MCU_PE[15..0]
MCU_PF[12..0]

U1B EFM32LG990

MCU_PD0	L11	D0 / ADC0_CH0 / OPA_OUT0 #5 / OPA_OUT2 #1 / US1_TX #1 / PCNT2_S0 #0
MCU_PD1	K11	D1 / ADC0_CH1 / OPA_OUT1 #5 / TIM0_CC0 #3 / US1_RX #1 / PCNT2_S1 #0
MCU_PD2	J9	D2 / ADC0_CH2 / EBI_A27 / TIM0_CC1 #3 / US1_CLK #1
MCU_PD3	J10	D3 / ADC0_CH3 / OPA_N2 / DBG_TDI #0,2 / TIM0_CC2 #3 / US1_CS #1
MCU_PD4	J11	D4 / ADC0_CH4 / OPA_P2 / DBG_TD2 #0,2 / LEU0_TX #0
MCU_PD5	H9	D5 / ADC0_CH5 / OPA_OUT2 #0 / DBG_TD3 #0,2 / LEU0_RX #0
MCU_PD6	H10	D6 / ADC0_CH6 / OPA_P1 / DBG_TDO #0 / LET0_O0 #0 / TIM1_CC0 #4 / LES_ALTEX0 / I2C0_SDA #1 / US1_RX #2 / ACMP0_O #2 / PCNT0_S0 #3
MCU_PD7	H11	D7 / ADC0_CH7 / OPA_N1 / DBG_TCLK #0 / LET0_O1 #0 / TIM1_CC1 #4 / LES_ALTEX1 / I2C0_SCL #1 / US1_TX #2 / ACMP1_O #2 / PCNT0_S1 #3 / CMU_OUT0 #2
MCU_PD8	H8	D8 / BCK_VIN / CMU_OUT1 #1
MCU_PD9	D6	D9 / LCD_SEG28 / EBI_CS0
MCU_PD10	A5	D10 / LCD_SEG29 / EBI_CS1
MCU_PD11	B5	D11 / LCD_SEG30 / EBI_CS2
MCU_PD12	C5	D12 / LCD_SEG31 / EBI_CS3
MCU_PD13	C4	D13 / DBG_TD1 #1
MCU_PD14	H3	D14 / TM0 / I2C0_SDA #3
MCU_PD15	J3	D15 / TM1 / I2C0_SCL #3
MCU_PE0	E9	E0 / EBI_A07 / TIM3_CC0 #1 / U0_TX #1 / I2C1_SDA #2 / PCNT0_S0 #1
MCU_PE1	E10	E1 / EBI_A08 / TIM3_CC1 #1 / U0_RX #1 / I2C1_SCL #2 / PCNT0_S1 #1
MCU_PE2	F10	E2 / BCK_VOUT / EBI_A09 #0 / TIM3_CC2 #1 / U1_TX #3 / ACMP0_O #1
MCU_PE3	E11	E3 / BCK_STAT / EBI_A10 #0 / U1_RX #3 / ACMP1_O #1
MCU_PE4	A9	E4 / LCD_COM0 / EBI_A11 / US0_CS #1
MCU_PE5	B9	E5 / LCD_COM1 / EBI_A12 / US0_CLK #1
MCU_PE6	C9	E6 / LCD_COM2 / EBI_A13 / US0_RX #1
MCU_PE7	D9	E7 / LCD_COM3 / EBI_A14 / US0_TX #1
MCU_PE8	B4	E8 / LCD_SEG4 / EBI_AD0 / PRS_CH3 #1 / PCNT2_S0 #1
MCU_PE9	A4	E9 / LCD_SEG5 / EBI_AD1 / PCNT2_S1 #1
MCU_PE10	C3	E10 / LCD_SEG6 / EBI_AD2 / TIM1_CC0 #1 / US0_TX #0
MCU_PE11	B3	E11 / LCD_SEG7 / EBI_AD3 / TIM1_CC1 #1 / LES_ALTEX5 / US0_RX #0
MCU_PE12	A3	E12 / LCD_SEG8 / EBI_AD4 / TIM1_CC2 #1 / LES_ALTEX6 / US0_CLK #0 / US0_RX #3 / I2C0_SDA #6 / CMU_OUT1 #2
MCU_PE13	B2	E13 / LCD_SEG9 / EBI_AD5 / LES_ALTEX7 / US0_CS #0 / US0_TX #3 / I2C0_SCL #6 / ACMP0_O #0 / GPIO_EM4WU #5
MCU_PE14	A2	E14 / LCD_SEG10 / EBI_AD6 / TIM3_CC0 #0 / LEU0_TX #2
MCU_PE15	A1	E15 / LCD_SEG11 / EBI_AD7 / TIM3_CC1 #0 / LEU0_RX #2
MCU_PF0	E8	F0 / DBG_SWCLK / LET0_O0 #2 / TIM0_CC0 #5 / LEU0_TX #3 / US1_CLK #2 / I2C0_SDA #5
MCU_PF1	D8	F1 / DBG_SWDIO / LET0_O1 #2 / TIM0_CC1 #5 / LEU0_RX #3 / US1_CS #2 / I2C0_SCL #5 / GPIO_EM4WU #3
MCU_PF2	C8	F2 / LCD_SEG0 / DBG_SWV #0,3 / EBI_ARDY / TIM0_CC2 #5 / LEU0_TX #4 / ACMP1_O #0 / GPIO_EM4WU #4
MCU_PF5	A7	F5 / LCD_SEG3 / USB_VBUSEN / EBI_Ren #0,2 / TIM0_CCC2 #2,5 / PRS_CH2 #1
MCU_PF6	B7	F6 / LCD_SEG24 / EBI_BL0 / TIM0_CC0 #2 / U0_TX #0
MCU_PF7	A6	F7 / LCD_SEG25 / EBI_BL1 / TIM0_CC1 #2 / U0_RX #0
MCU_PF8	B6	F8 / LCD_SEG26 / DBG_TCLK #1 / EBI_Wen #1 / TIM0_CC2 #2
MCU_PF9	C6	F9 / LCD_SEG27 / DBG_TDO #1 / EBI_Ren #1
MCU_PF10	A10	F10 / USB_DM / U1_RX #1
MCU_PF11	A11	F11 / USB_DP / U1_TX #1
MCU_PF12	A8	F12 / USB_ID

EFM32LG990

TOP

Schematic Title	BRD3601A - LG990 MCU Plugin
Page Title	EFM32 I/O
Designed: AG	Approved: JNO
Size: A3	BOM Doc No: <Cage Code>
Document number	BRD3601A
Revision	B01
Design Created Date: Wednesday, December 03, 2008	
Sheet Created Date: Tuesday, April 07, 2009	Sheet Modified Date: Thursday, April 26, 2012
Sheet	2 of 7

Reset Circuit

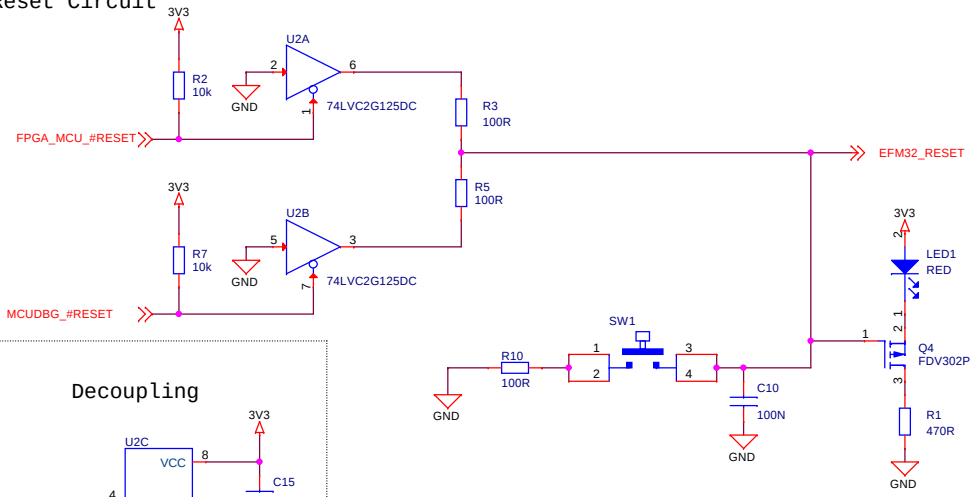

Decoupling

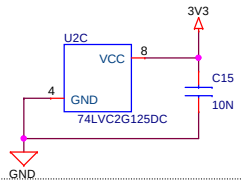

EFM32 Power and Decoupling

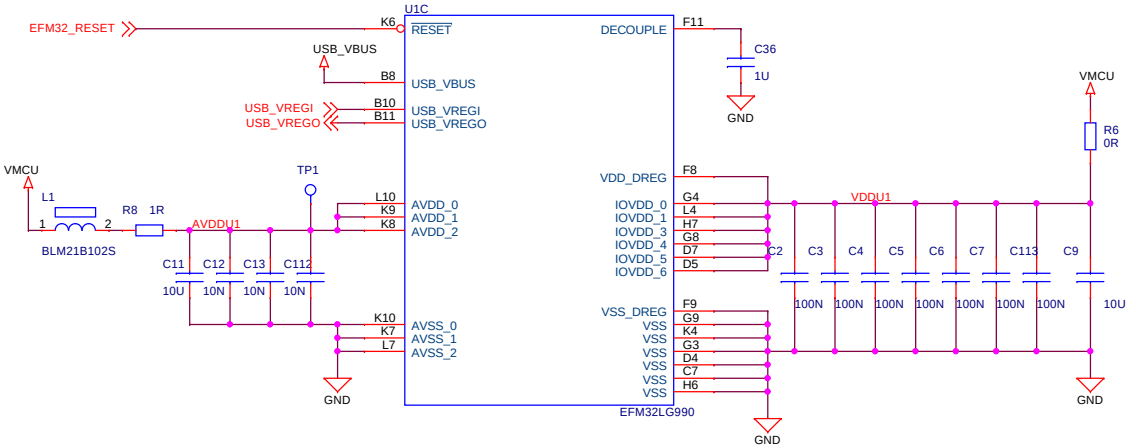

Backup Power

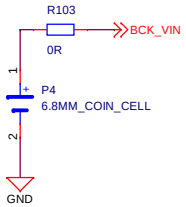

USB Over Current protection

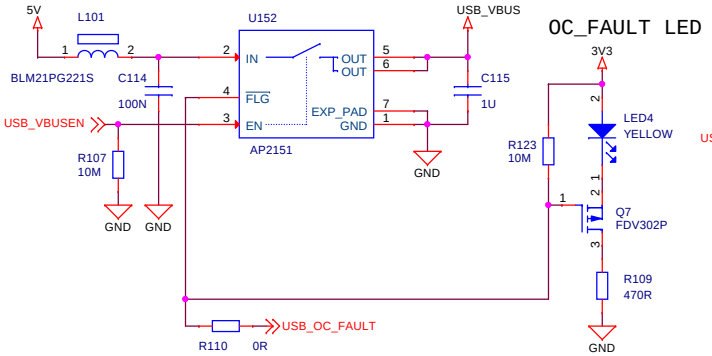

OC_FAULT LED

USB STATUS LED

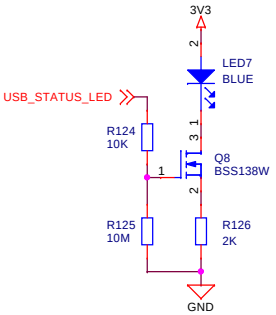

EFM32 USB Regulator Decoupling

VREG_OUT LED

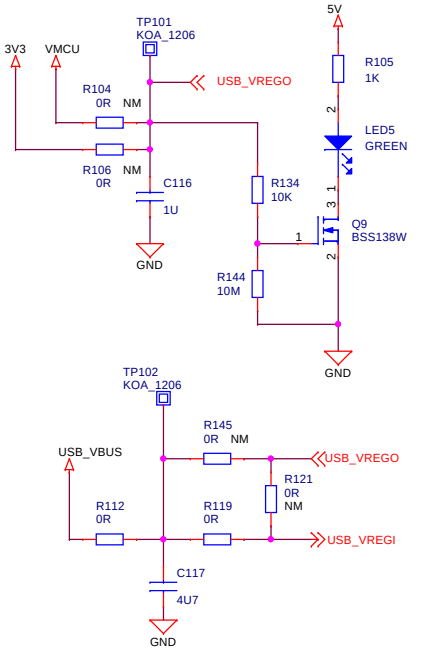

High Frequency Clock

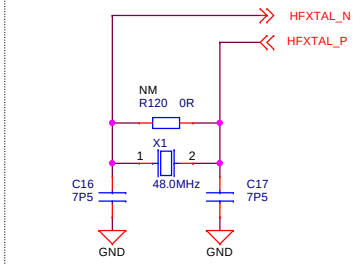

Low Frequency Clock

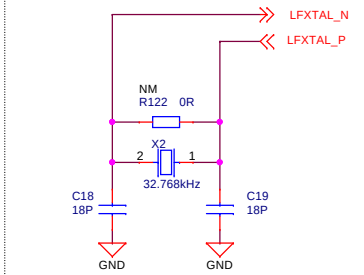

USB Connection and ESD protection

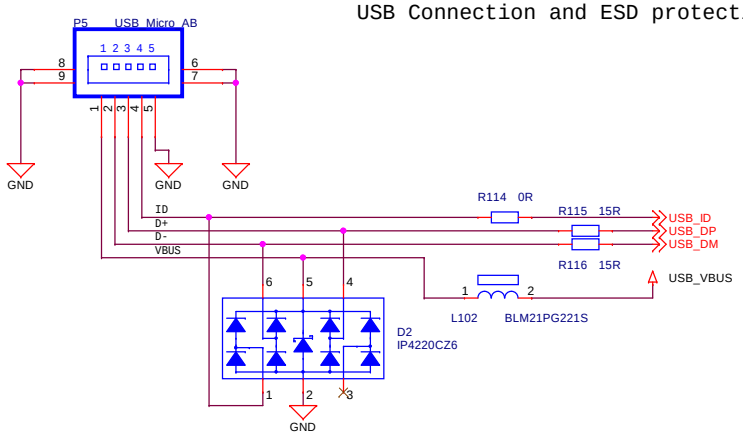

USB VBUS Power LED

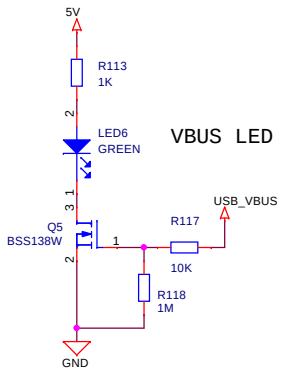

TOP

Schematic Title	**BRD3601A - LG990 MCU Plugin**
Page Title	**EFM32 Power & USB**
Designed: DDB / Approved: JNO	
Size: A3 / BOM Doc No: <Cage Code>	Document number: **BRD3601A** / Revision: **B01**
Design Created Date: Wednesday, December 03, 2008	Sheet Created Date: Wednesday, July 15, 2009 / Sheet Modified Date: Thursday, April 26, 2012 / Sheet: 3 of 7

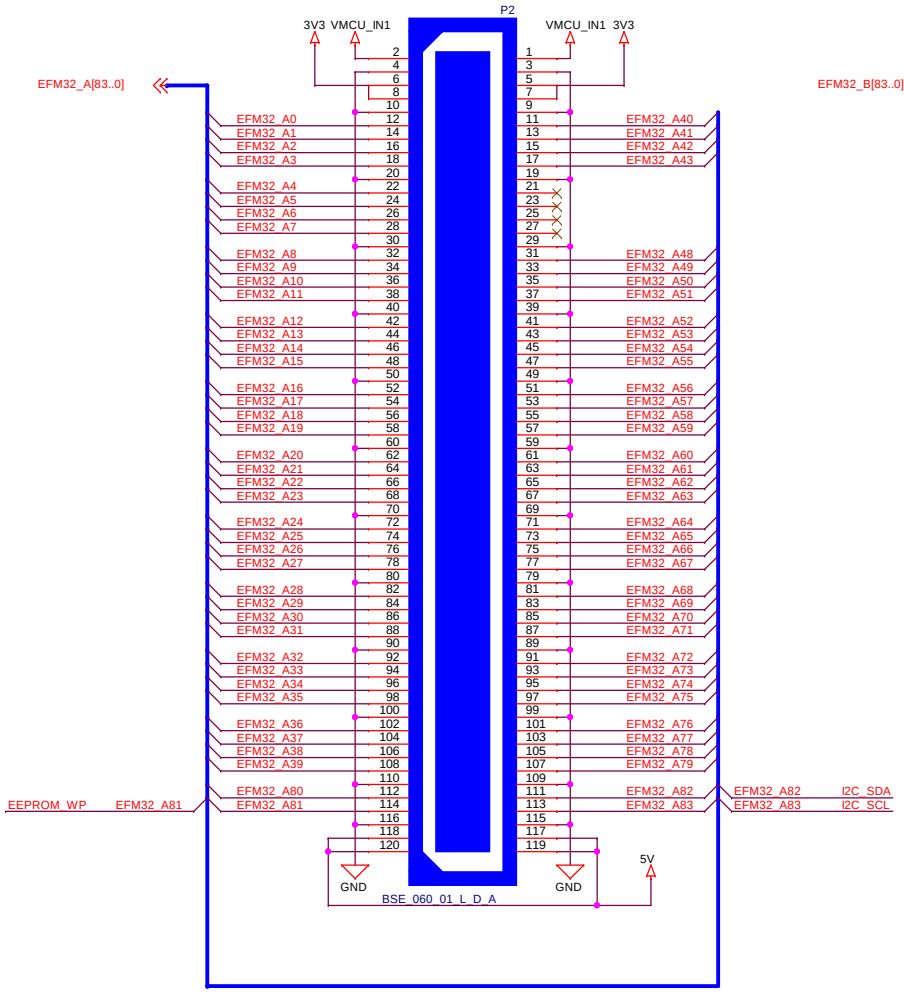

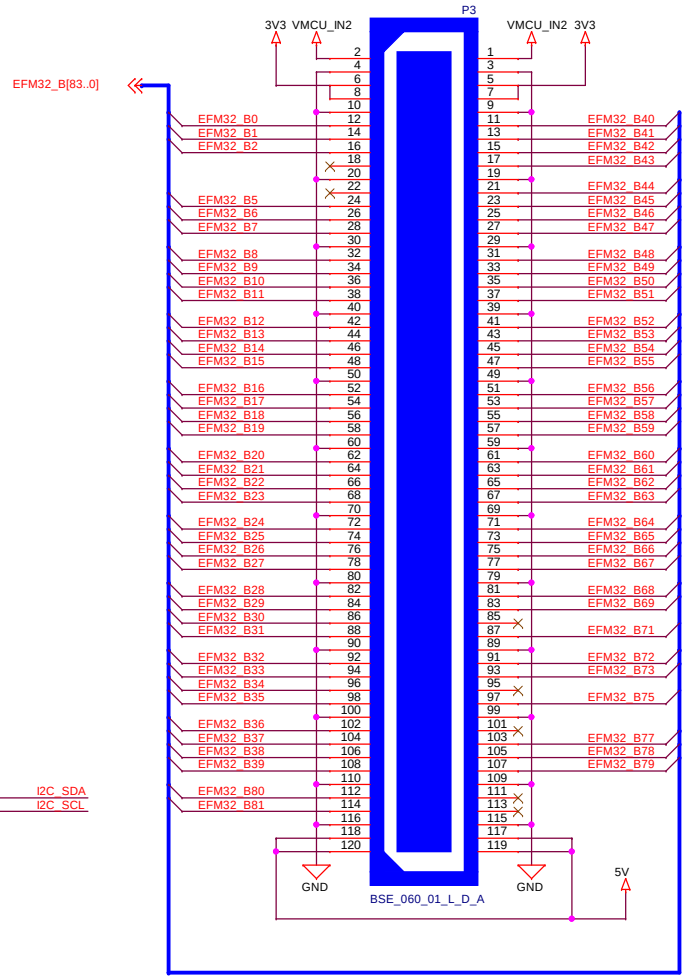

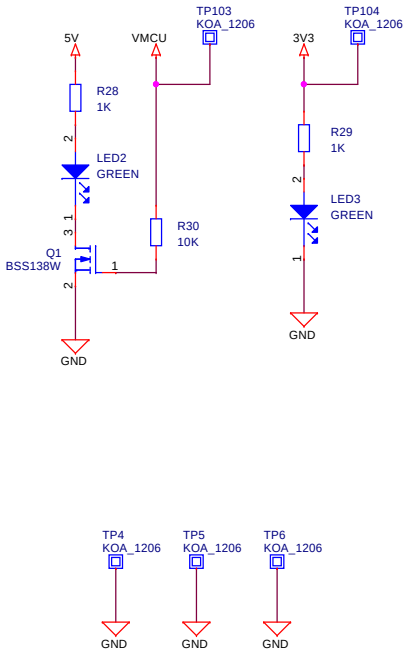

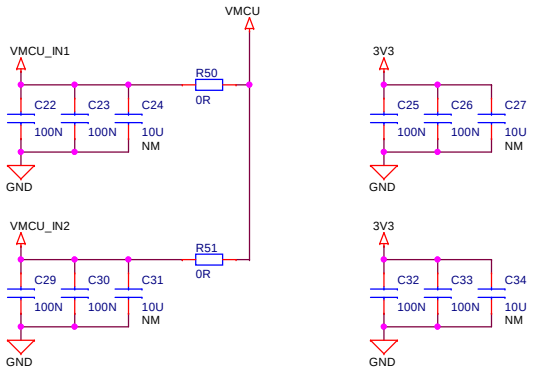

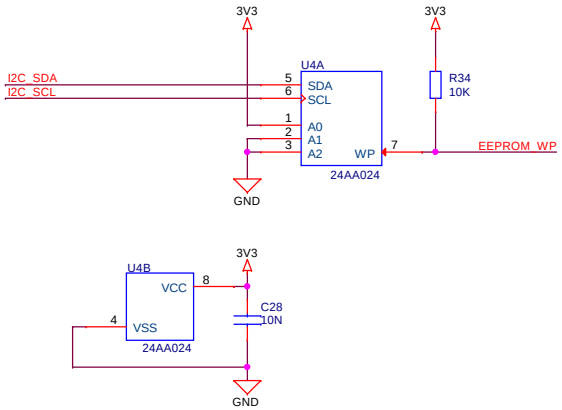

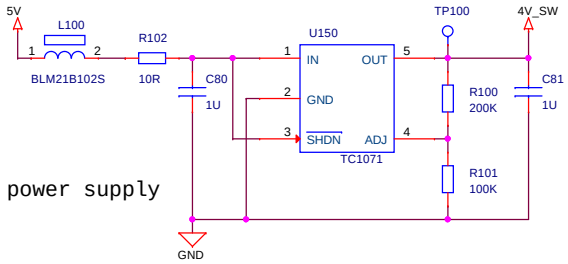

EBI/TFT Switches power supply

TOP

Schematic Title	**BRD3601A - LG990 MCU Plugin**
Page Title	**EFM32 Connectors**
Designed: AG / Approved: JNO	Document number: **BRD3601A** / Revision: **B01**
Size: A3 / BOM Doc No: <Cage Code>	Sheet: 4 of 7
Design Created Date: Wednesday, December 03, 2008	Sheet Created Date: Monday, March 16, 2009 / Sheet Modified Date: Thursday, April 26, 2012

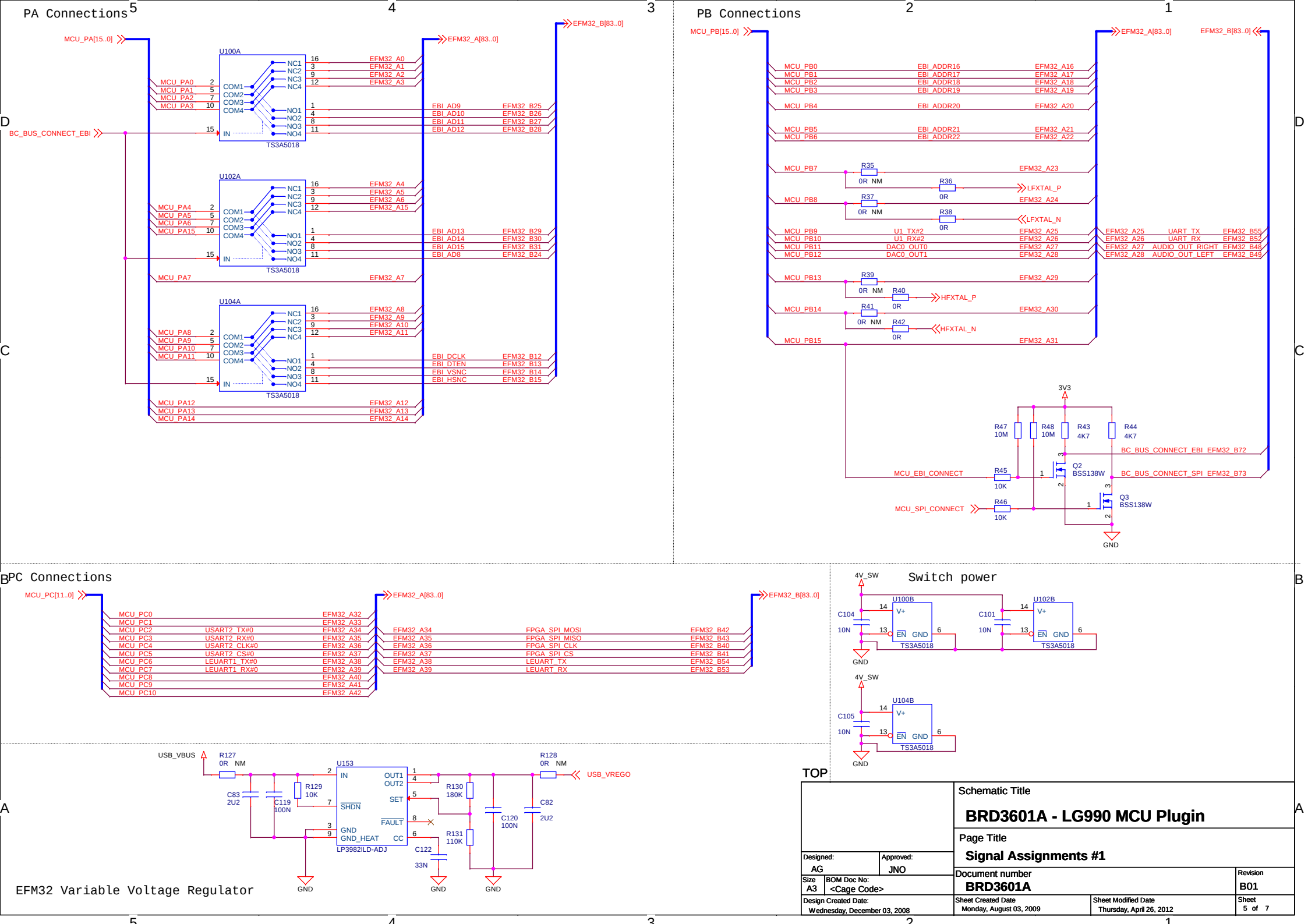
PA Connections
PB Connections
PC Connections
Switch power
EFM32 Variable Voltage Regulator
TOP
MCU_PA[15..0]
MCU_PB[15..0]
MCU_PC[11..0]
EFM32_A[83..0]
EFM32_B[83..0]
BC_BUS_CONNECT_EBI
U100A
U102A
U104A
TS3A5018
MCU_PA0
MCU_PA1
MCU_PA2
MCU_PA3
MCU_PA4
MCU_PA5
MCU_PA6
MCU_PA7
MCU_PA8
MCU_PA9
MCU_PA10
MCU_PA11
MCU_PA12
MCU_PA13
MCU_PA14
MCU_PA15
EFM32_A0
EFM32_A1
EFM32_A2
EFM32_A3
EFM32_A4
EFM32_A5
EFM32_A6
EFM32_A7
EFM32_A8
EFM32_A9
EFM32_A10
EFM32_A11
EFM32_A12
EFM32_A13
EFM32_A14
EFM32_A15
EBI_AD8
EBI_AD9
EBI_AD10
EBI_AD11
EBI_AD12
EBI_AD13
EBI_AD14
EBI_AD15
EBI_DCLK
EBI_DTEN
EBI_VSNC
EBI_HSNC
EFM32_B24
EFM32_B25
EFM32_B26
EFM32_B27
EFM32_B28
EFM32_B29
EFM32_B30
EFM32_B31
EFM32_B12
EFM32_B13
EFM32_B14
EFM32_B15
MCU_PB0
MCU_PB1
MCU_PB2
MCU_PB3
MCU_PB4
MCU_PB5
MCU_PB6
MCU_PB7
MCU_PB8
MCU_PB9
MCU_PB10
MCU_PB11
MCU_PB12
MCU_PB13
MCU_PB14
MCU_PB15
EBI_ADDR16
EBI_ADDR17
EBI_ADDR18
EBI_ADDR19
EBI_ADDR20
EBI_ADDR21
EBI_ADDR22
EFM32_A16
EFM32_A17
EFM32_A18
EFM32_A19
EFM32_A20
EFM32_A21
EFM32_A22
EFM32_A23
EFM32_A24
EFM32_A25
EFM32_A26
EFM32_A27
EFM32_A28
EFM32_A29
EFM32_A30
EFM32_A31
R35
R36
R37
R38
R39
R40
R41
R42
0R NM
0R
LFXTAL_P
LFXTAL_N
HFXTAL_P
HFXTAL_N
U1_TX#2
U1_RX#2
DAC0_OUT0
DAC0_OUT1
UART_TX
UART_RX
AUDIO_OUT_RIGHT
AUDIO_OUT_LEFT
EFM32_B55
EFM32_B52
EFM32_B48
EFM32_B49
3V3
R47
R48
R43
R44
10M
4K7
R45
R46
10K
Q2
Q3
BSS138W
MCU_EBI_CONNECT
MCU_SPI_CONNECT
BC_BUS_CONNECT_EBI_EFM32_B72
BC_BUS_CONNECT_SPI_EFM32_B73
GND
MCU_PC0
MCU_PC1
MCU_PC2
MCU_PC3
MCU_PC4
MCU_PC5
MCU_PC6
MCU_PC7
MCU_PC8
MCU_PC9
MCU_PC10
USART2_TX#0
USART2_RX#0
USART2_CLK#0
USART2_CS#0
LEUART1_TX#0
LEUART1_RX#0
EFM32_A32
EFM32_A33
EFM32_A34
EFM32_A35
EFM32_A36
EFM32_A37
EFM32_A38
EFM32_A39
EFM32_A40
EFM32_A41
EFM32_A42
EFM32_A83
EFM32_A84
EFM32_A85
EFM32_A86
EFM32_A87
EFM32_A88
EFM32_A89
EFM32_A90
EFM32_A91
EFM32_A92
EFM32_A93
FPGA_SPI_MOSI
FPGA_SPI_MISO
FPGA_SPI_CLK
FPGA_SPI_CS
LEUART_TX
LEUART_RX
EFM32_B42
EFM32_B43
EFM32_B40
EFM32_B41
EFM32_B54
EFM32_B53
4V_SW
U100B
U102B
U104B
C104
C101
C105
10N
V+
EN
GND
TS3A5018
USB_VBUS
USB_VREGO
R127
R128
R129
R130
R131
C83
C119
C120
C82
C122
2U2
100N
10K
180K
110K
33N
U153
IN
OUT1
OUT2
SET
SHDN
FAULT
GND_HEAT
CC
LP3982ILD-ADJ
Schematic Title
BRD3601A - LG990 MCU Plugin
Page Title
Signal Assignments #1
Designed:
AG
Approved:
JNO
Size
A3
BOM Doc No:
<Cage Code>
Document number
BRD3601A
Revision
B01
Design Created Date:
Wednesday, December 03, 2008
Sheet Created Date
Monday, August 03, 2009
Sheet Modified Date
Thursday, April 26, 2012
Sheet
5 of 7

PD Connections

MCU_PD[15..0]
MCU_PD2
R132 50R NM
C123 50P NM
R133 0R
GND
EFM32_A50
ANALOG_SE_A
EFM32_B44
US1_CLK_#1
EFM32_B45
EFM32_A[83..0]
EFM32_B[83..0]

Debug Trace Demux

U110A
MCU_PD3
MCU_PD4
MCU_PD5
MCU_PD6
EFM32_A51
EFM32_A52
EFM32_A53
EFM32_A54
US1_CS_#1 / TOUCH_0
TOUCH_1
TOUCH_2
AUDIO_IN_RIGHT
EFM32_B57
EFM32_B58
EFM32_B71
EFM32_B50
DBG_TD1
DBG_TD2
DBG_TD3
DBG_TD0
EFM32_B60
EFM32_B61
EFM32_B62
EFM32_B59
TS3A5018

U107A
MCU_PD7
EFM32_A55
AUDIO_IN_LEFT
EFM32_B51
DBG_TCLK
EFM32_B63
GND
TS3A5018

MCU_PD8
BCK_VIN
EFM32_A56
BCK_VIN

U106A
MCU_PD9
MCU_PD10
MCU_PD11
MCU_PD12
EFM32_A57
EFM32_A58
EFM32_A59
EFM32_A60
EBI_CS0
EBI_CS1
EBI_CS2
EBI_CS3
EFM32_B36
EFM32_B37
EFM32_B38
EFM32_B39
TS3A5018

MCU_PD13
MCU_SPI_CONNECT
EFM32_A61
MCU_PD14
I2C0_SDA#3
EFM32_A62
MCU_PD15
I2C0_SCL#3
EFM32_A63
I2C_BUS_SDA
I2C_BUS_SCL
EFM32_B68
EFM32_B69

BC_BUS_CONNECT_EBI
EFM32_A80
R135 100K
GND

PE Connections

MCU_PE[15..0]
EFM32_A[83..0]
EFM32_B[83..0]
MCU_PE0
MCU_PE1
MCU_PE2
MCU_PE3
EFM32_A64
EFM32_A65
EFM32_A66
EFM32_A67
FPGA_#INT
EFM32_B81
USB_STATUS_LED
USB_OC_FAULT

MCU_PE4
MCU_PE5
MCU_PE6
MCU_PE7
US0_CS_#1
US0_CLK_#1
US0_RX_#1
US0_TX_#1
EFM32_A68
EFM32_A69
EFM32_A70
EFM32_A71
CS_MICROSD
CLK_MICROSD
MISO_MICROSD
MOSI_MICROSD
EFM32_B65
EFM32_B64
EFM32_B67
EFM32_B66

U108A
MCU_PE8
MCU_PE9
MCU_PE10
MCU_PE11
EFM32_A72
EFM32_A73
EFM32_A74
EFM32_A75
EBI_AD0
EBI_AD1
EBI_AD2
EBI_AD3
EFM32_B16
EFM32_B17
EFM32_B18
EFM32_B19
TS3A5018

U109A
MCU_PE12
MCU_PE13
MCU_PE14
MCU_PE15
EFM32_A76
EFM32_A77
EFM32_A78
EFM32_A79
EBI_AD4
EBI_AD5
EBI_AD6
EBI_AD7
EFM32_B20
EFM32_B21
EFM32_B22
EFM32_B23
TS3A5018

BC_BUS_CONNECT_EBI

Reset connections

EFM32_B[83..0]
EFM32_B80
FPGA_MCU_#RESET
EFM32_B75
MCUDBG_#RESET

PF Connections

MCU_PF[12..0]
MCU_PF0
MCU_PF1
MCU_PF2
DBG_TCK_SWCLK
DBG_TMS_SWDIO
DBG_TDO_SWO
EFM32_B0
EFM32_B1
EFM32_B2
R136 0R
R146 0R NM
EBI_ARDY
EFM32_B32
MCU_PF5
MCU_PF6
MCU_PF7
USB_VBUSEN
EFM32_B5
EFM32_B6
EFM32_B7
MCU_PF10
MCU_PF11
MCU_PF12
USB_DM
USB_DP
USB_ID
EBI_BL0
EBI_BL1
EFM32_B10
EFM32_B11
EFM32_B77
EFM32_B78
EFM32_B79
USB_VBUSEN
EFM32_B[83..0]

U111A
MCU_PF8
MCU_PF9
MCU_PC11
MCU_PC[11..0]
EFM32_A43
EFM32_B8
EFM32_B9
EFM32_A[83..0]
EBI_WEN
EBI_REN
EBI_ALE
EFM32_B34
EFM32_B35
EFM32_B33
TS3A5018
BC_BUS_CONNECT_EBI

4V_SW
U106B
U107B
U108B
C108 10N
C109 10N
C107 10N
U109B
U110B
U111B
C106 10N
C110 10N
C111 10N
TS3A5018
GND

Switch power

TOP

Schematic Title	**BRD3601A - LG990 MCU Plugin**
Page Title	**Signal Assignments #2**
Designed: AG / Approved: JNO	
Size: A3 / BOM Doc No: <Cage Code>	Document number: **BRD3601A** / Revision: **B01**
Design Created Date: Wednesday, December 03, 2008	Sheet Created Date: Tuesday, August 04, 2009 / Sheet Modified Date: Thursday, April 26, 2012 / Sheet: 6 of 7

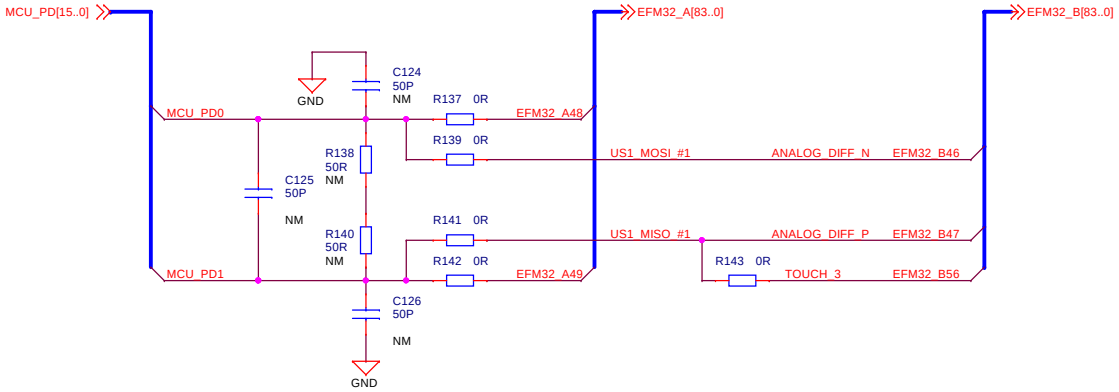

TOP

	Schematic Title: **BRD3601A - LG990 MCU Plugin**
	Page Title: **Misc Connections**
Designed: AG / Approved: JNO	Document number: **BRD3601A** / Revision: B01
Size: A3 / BOM Doc No: <Cage Code>	
Design Created Date: Wednesday, December 03, 2008	Sheet Created Date: Monday, March 14, 2011 / Sheet Modified Date: Thursday, April 26, 2012 / Sheet: 7 of 7