REVISION RECORD			
REV:	Description Summary of Revision	APPROVED:	DATE:

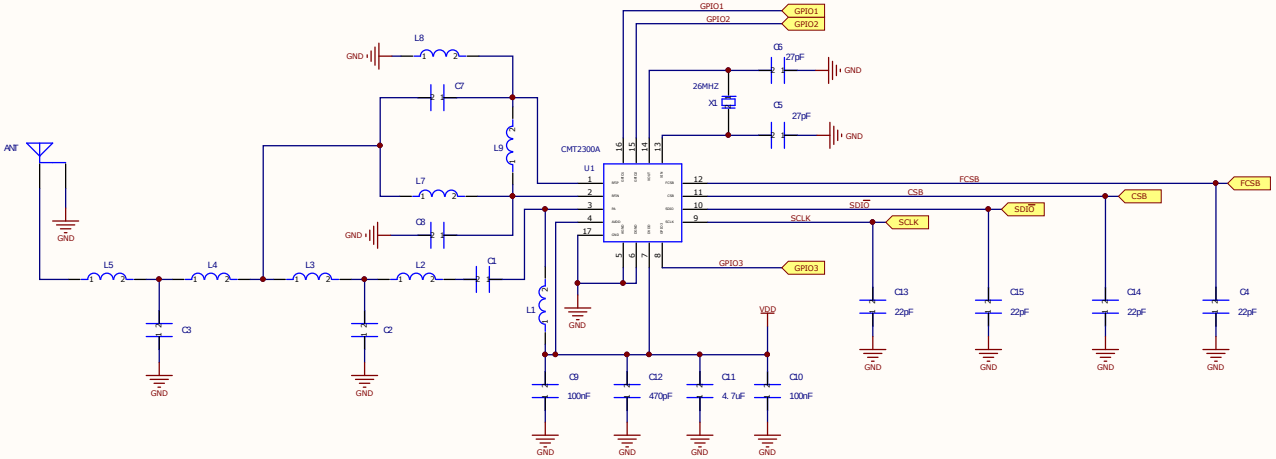

Mhz	L2	L3	L4	L5	L7	L8	L9	C1	C2	C3	C7	C8	L1
434	56nH	33nH	18nH	18nH	27nH	27nH	68nH	15pF	6.8pF	7.5pF	4.7pF	4.7pF	180NH
868	10nH	8.2nH	10nH	10nH	15nH	15nH	12nH	22pF	6.8pF	3.6pF	2.2pF	2.2pF	180NH
915	10nH	4.7nH	10nH	10nH	15nH	15nH	12nH	15pF	6.8pF	3.6pF	2.2pF	2.2pF	180NH
315	75NH	47NH	27NH	27NH	39NH	39NH	150NH	22PF	8.2PF	10PF	6.2PF	4.7PF	220NH

HOPERF
ELECTRONIC

COMPANY: Hope Microelectronics Co., Ltd

DRAWN: ZNK
DATED: 2018/3/2
APPROVAL:
DATED:
TITLE: RFM300 V1.0
REV:

Title
Size: A4
Number
Revision
Date: 2018/3/2 星期五
File: E:\HOPERF\RFM300(2).Sheet 1.SchDoc
Sheet of
Drawn By: