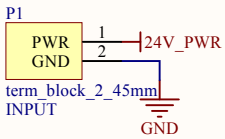

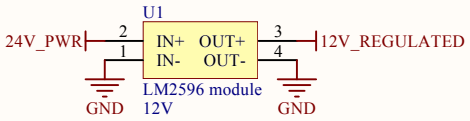

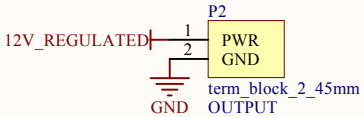

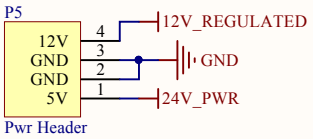

Title: Koruza Expander Board		
Size: A4	Number:	Revision: 1.0
Date: 26.8.2016		Sheet 1 of 4
File: C:\Users\..\Sheet1_PWR_connectors.SchDoc		Drawn By: Matej Gomboc

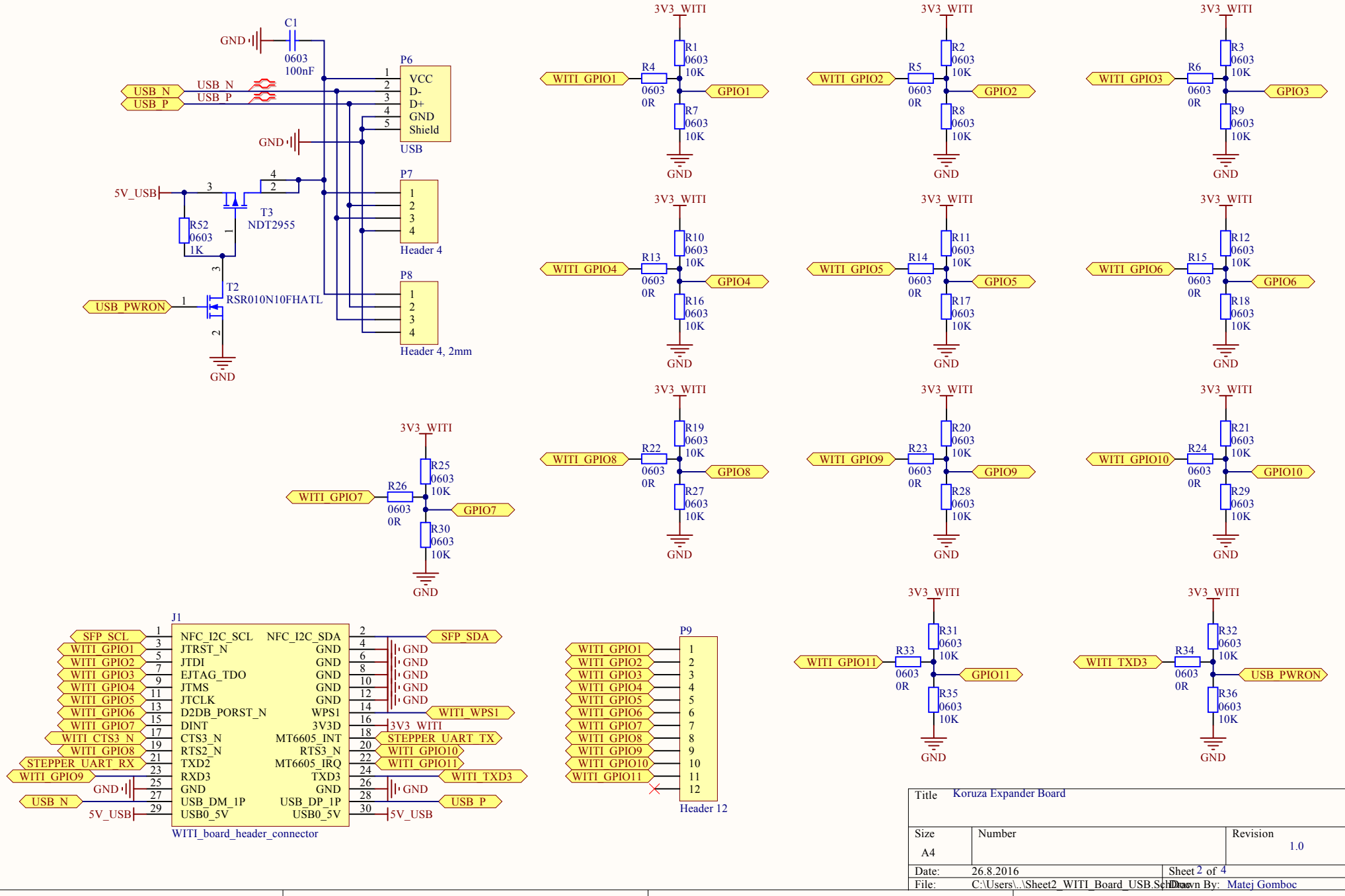
C1
GND
0603
100nF
P6
VCC
D-
D+
GND
Shield
USB
USB_N
USB_P
5V_USB
T3
NDT2955
R52
0603
1K
P7
Header 4
T2
RSR010N10FHATL
USB_PWRON
P8
Header 4, 2mm
3V3_WITI
R1
R2
R3
R4
R5
R6
R7
R8
R9
0603
10K
0R
WITI_GPIO1
WITI_GPIO2
WITI_GPIO3
GPIO1
GPIO2
GPIO3
R10
R11
R12
R13
R14
R15
R16
R17
R18
WITI_GPIO4
WITI_GPIO5
WITI_GPIO6
GPIO4
GPIO5
GPIO6
R19
R20
R21
R22
R23
R24
R25
R26
R27
R28
R29
R30
WITI_GPIO7
WITI_GPIO8
WITI_GPIO9
WITI_GPIO10
GPIO7
GPIO8
GPIO9
GPIO10
R31
R32
R33
R34
R35
R36
WITI_GPIO11
WITI_TXD3
GPIO11
USB_PWRON
J1
NFC_I2C_SCL
NFC_I2C_SDA
JTRST_N
JTDI
EJTAG_TDO
JTMS
JTCLK
D2DB_PORST_N
DINT
CTS3_N
RTS2_N
TXD2
RXD3
USB_DM_1P
USB0_5V
GND
3V3D
WPS1
MT6605_INT
RTS3_N
MT6605_IRQ
TXD3
SFP_SCL
SFP_SDA
WITI_CTS3_N
STEPPER_UART_RX
STEPPER_UART_TX
WITI_WPS1
WITI_TXD3
WITI_board_header_connector
P9
Header 12
Title
Koruza Expander Board
Size
A4
Number
Revision
1.0
Date:
26.8.2016
Sheet 2 of 4
File:
C:\Users\..\Sheet2_WITI_Board_USB.SchDoc
Drawn By:
Matej Gomboc

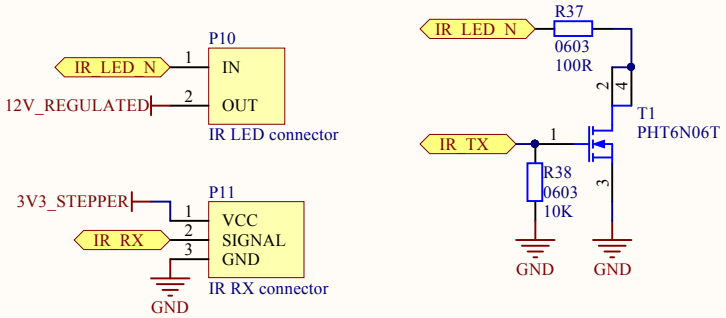

Title: Koruza Expander Board		
Size: A4	Number:	Revision: 1.0
Date: 26.8.2016		Sheet 3 of 4
File: C:\Users\..\Sheet3_IR.SchDoc		Drawn By: Matej Gomboc

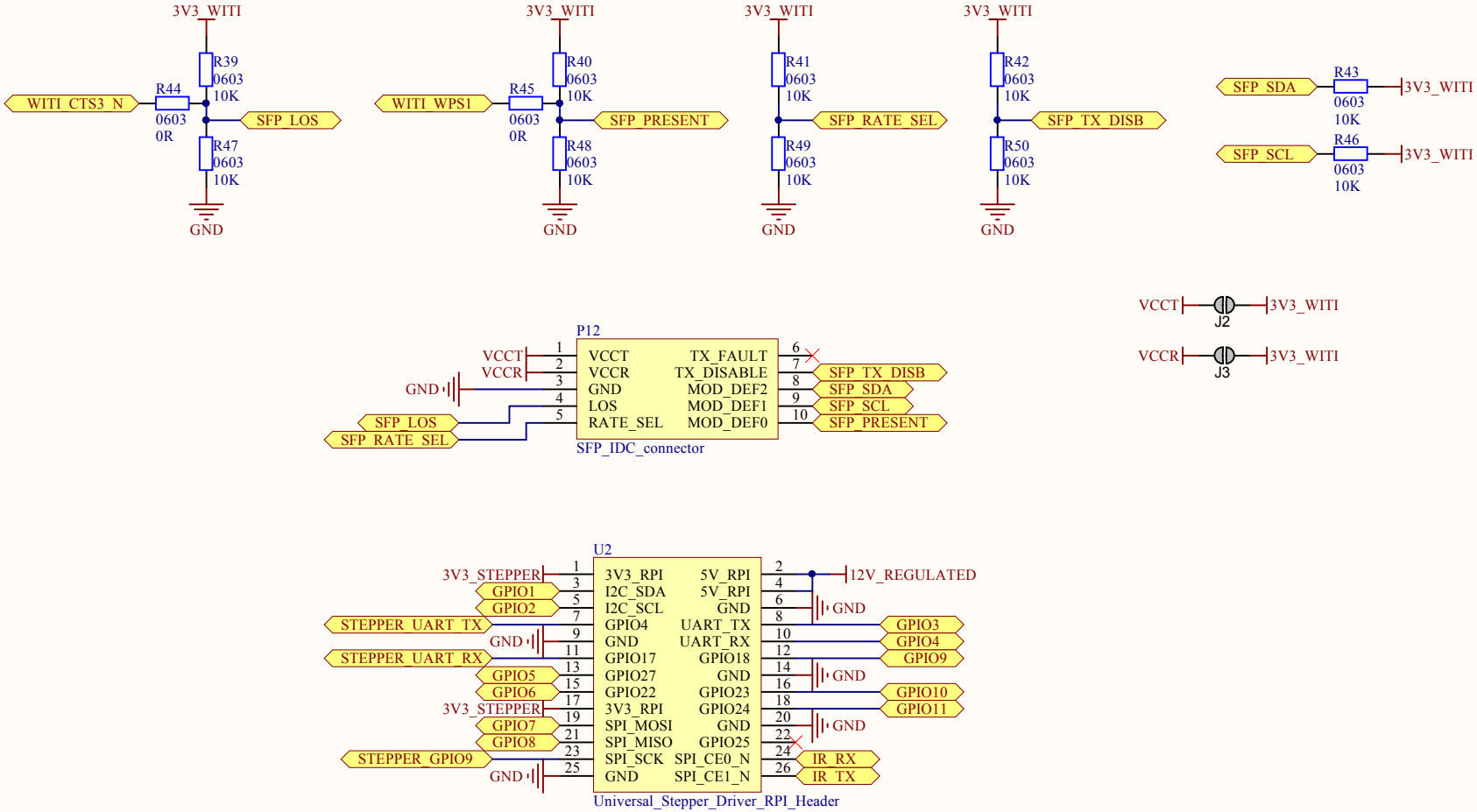

Title: Koruza Expander Board		
Size: A4	Number:	Revision: 1.0
Date: 26.8.2016		Sheet 4 of 4
File: C:\Users\..\Sheet4_SFP_StepperDriver.SchDoc		Drawn By: Matej Gomboc

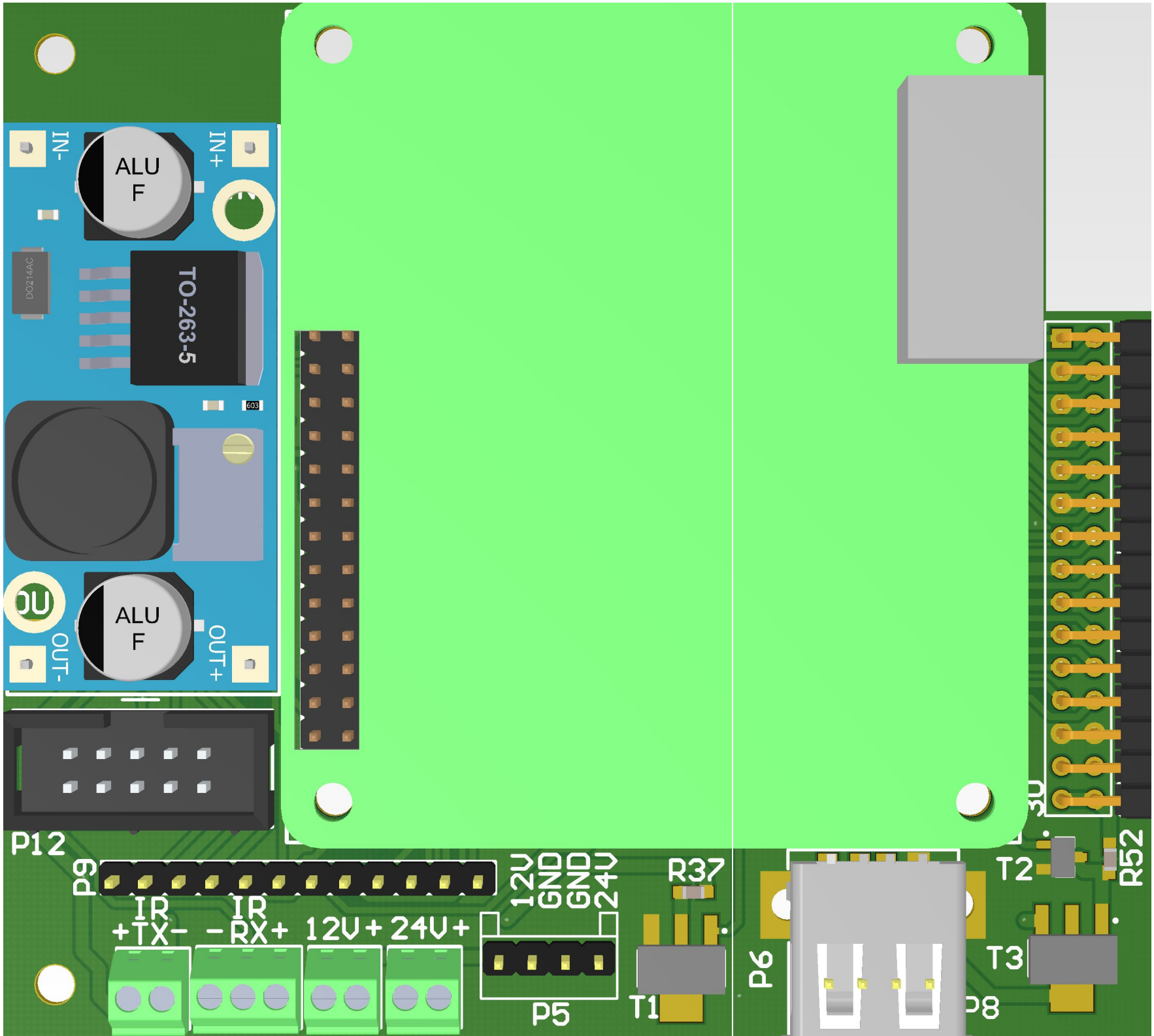

IN-
IN+
ALU
F
DO214AC
TO-263-5
603
ALU
F
OUT-
OUT+
P12
P9
IR
+TX-
IR
-RX+
12V+
24V+
12V
GND
GND
24V
P5
R37
T1
P6
T2
T3
R52

Korvuza Expander Board
Institute IRNAS Race
+ - GND RX 3V3
12 GPIO WITI 1
GND D- D+ 5V
C1
SFP
R38
R50 R42 R41 R49
J3 J2
R24 R45 R23 R34 R22 R44 R26
R29 R48 R28 R36 R27 R47 R30
R21 R40 R20 R32 R19 R39 R25
R15 R35 R14 R13 R6 R5 R4 R46
R18 R33 R17 R16 R9 R8 R7 R43
R12 R31 R11 R10 R3 R2 R1

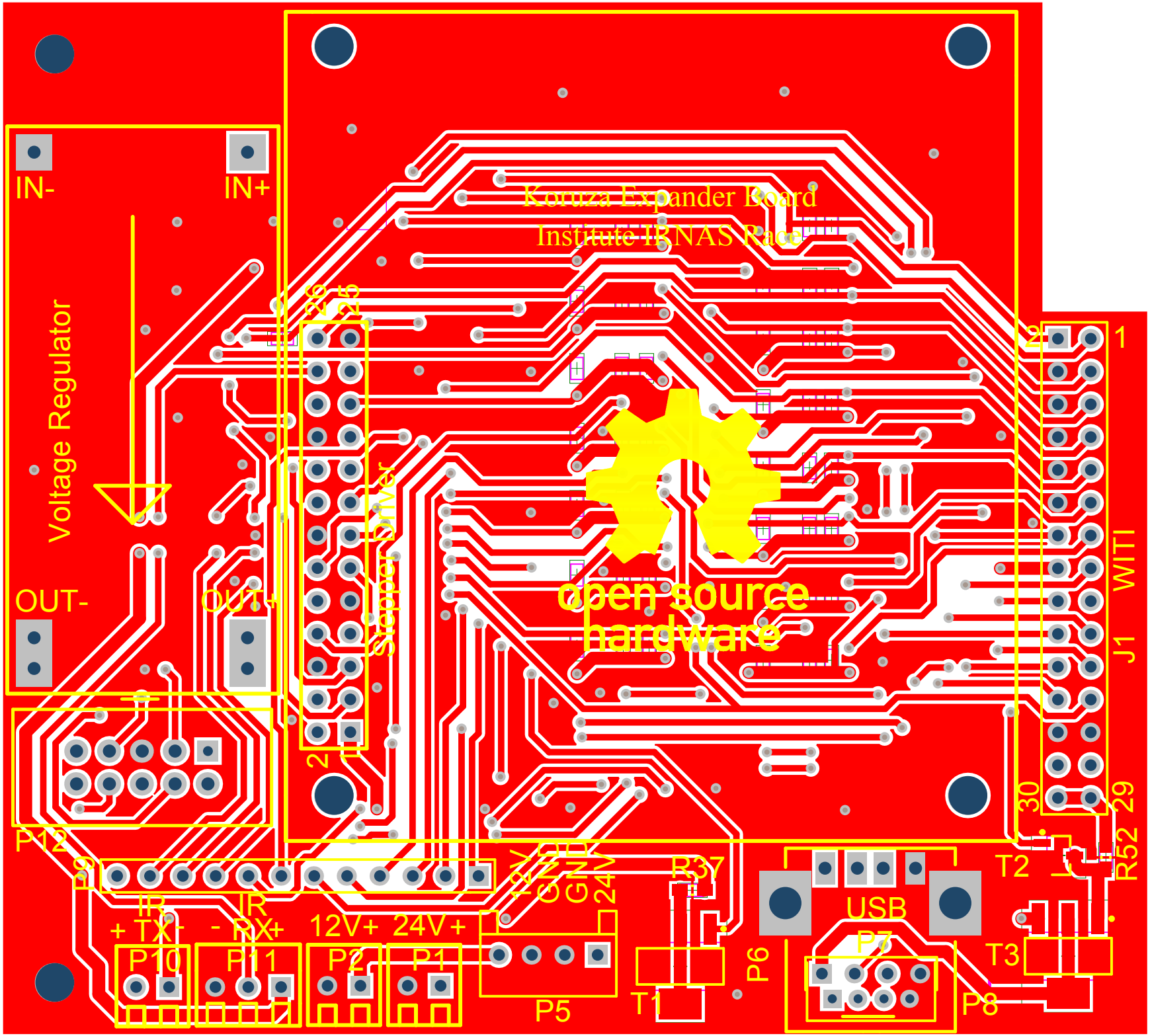
Koruza Expander Board
Institute IBNAS Race
IN-
IN+
OUT-
OUT+
Voltage Regulator
Stepper Driver
open source
hardware
WITI
J1
P12
IR
+ TX-
- RX+
12V+
24V+
P10
P11
P2
P1
P5
T1
P6
R37
USB
P7
P8
T2
T3
R52

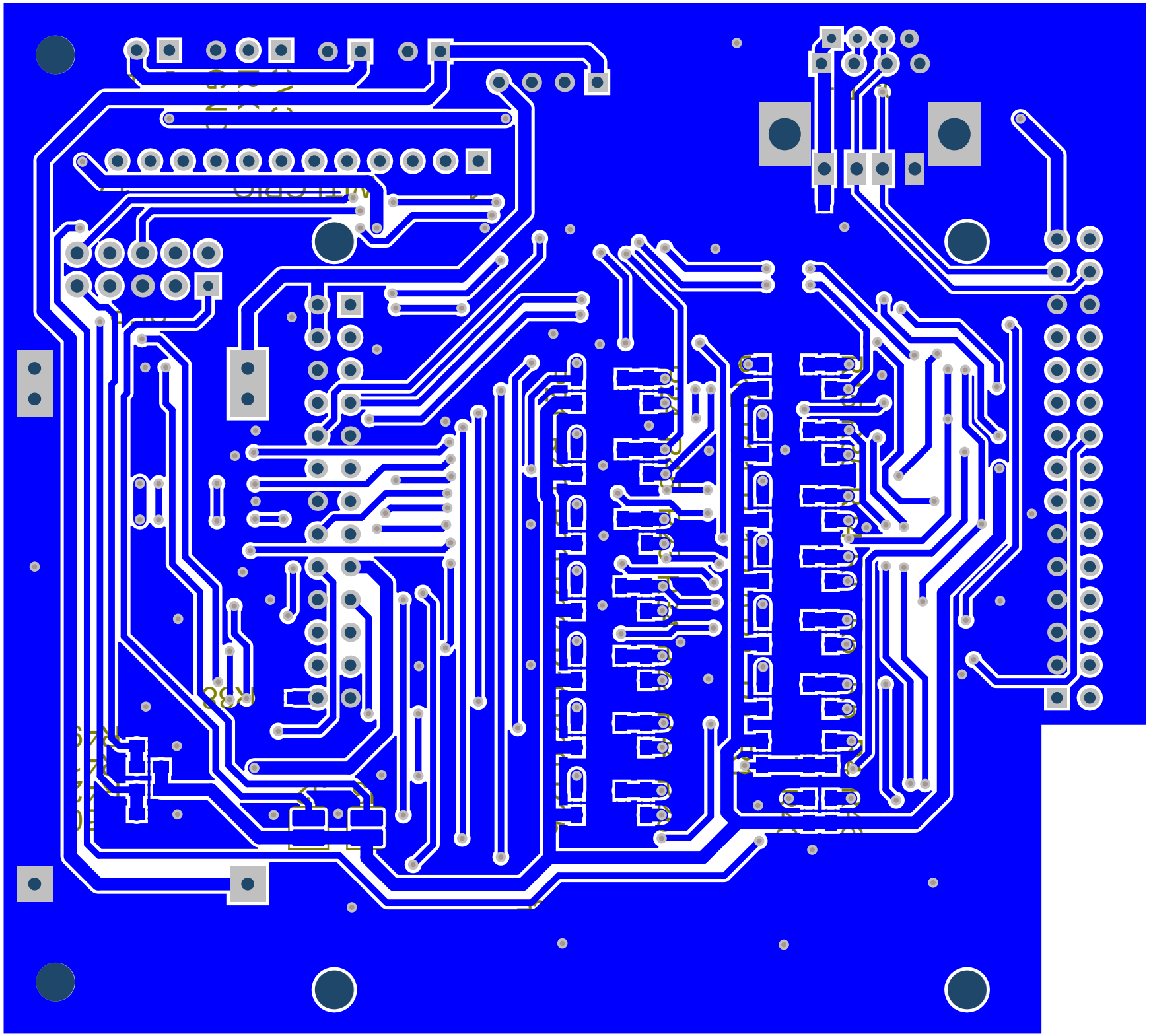

Description	Comment	Designator	Quantity	Value
1X4 Pwr Header	Pwr Header	P5	1	
Ceramic Capacitor	0603	C1	1	100nF
Header, 4-Pin	Header 4	P7	1	
Header, 4-Pin, 2mm	Header 4, 2mm	P8	1	
Header, 12-Pin	Header 12	P9	1	
IR LED connector	IR LED connector	P10	1	
IR RX connector	IR RX connector	P11	1	
LM2596 module	LM2596 module	U1	1	12V
N MOSFET	PHT6N06T	T1	1	
N MOSFET	RSR010N10FHATL	T2	1	
P MOSFET	NDT2955	T3	1	
Resistor	0603	R1, R2, R3, R7, R8, R9, R10, R11, R12, R16, R17, R18, R19, R20, R21, R25, R27, R28, R29, R30, R31, R32, R35, R36, R38, R39, R40, R41, R42, R43, R46, R47, R48, R49, R50	35	10K
Resistor	0603	R37	1	100R
Resistor	0603	R4, R5, R6, R13, R14, R15, R22, R23, R24, R26, R33, R34, R44, R45	14	0R
Resistor	0603	R52	1	1K
SFP IDC10 connector	SFP_IDC_connector	P12	1	
terminal block, 2.45mm	term_block_2_45mm	P1, P2	2	
Universal Stepper Driver Raspberry PI Header	Universal_Stepper_Driver_RPI_Header	U2	1	
USB A standard receptacle	USB	P6	1	
WITI board header connector	WITI_board_header_connector	J1	1	