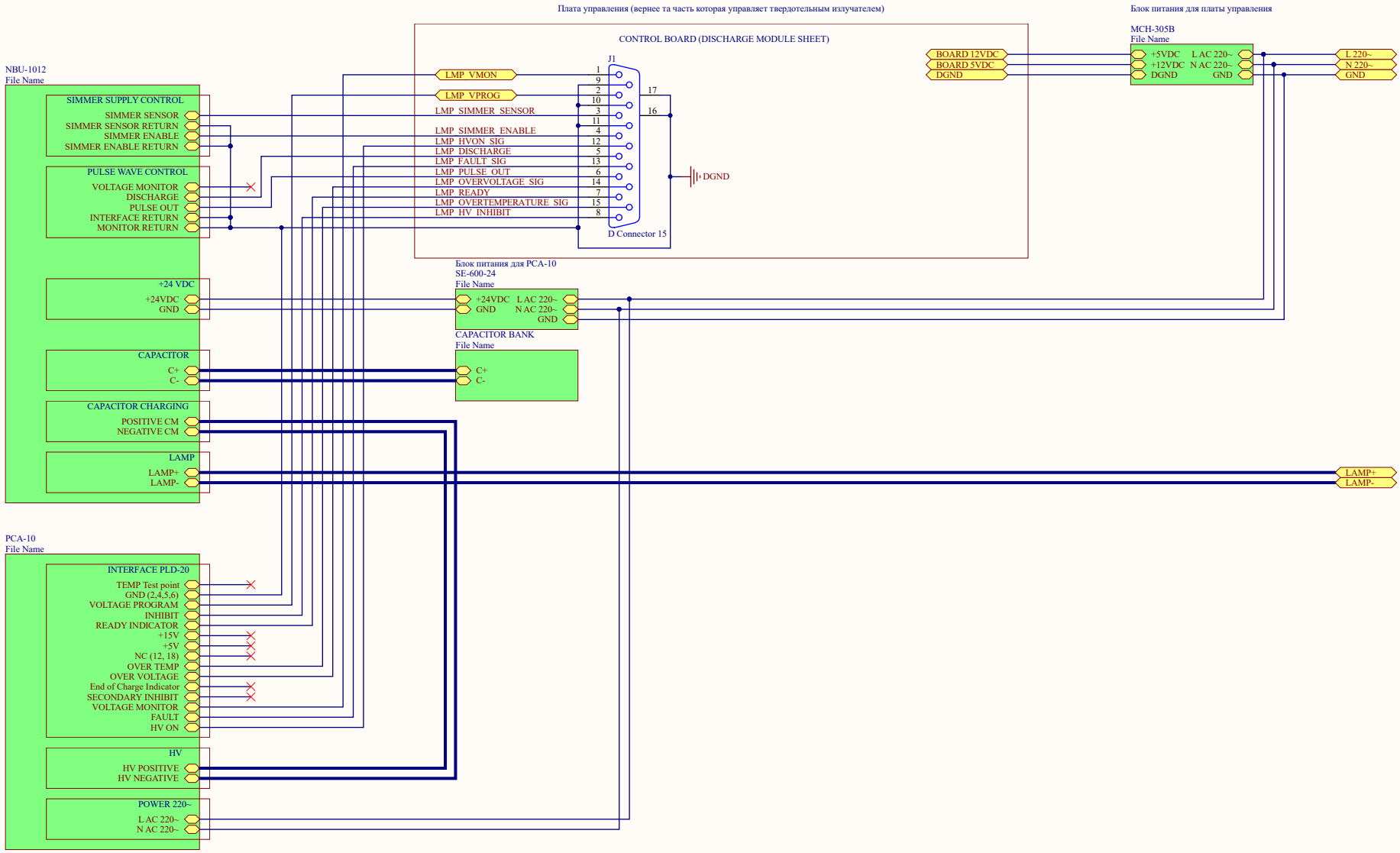

Title		
Size A3	Number	Revision
Date: 9/2/2016		Sheet of
File: C:\Users\..\BaseControlSheet.SchDoc		Drawn By:

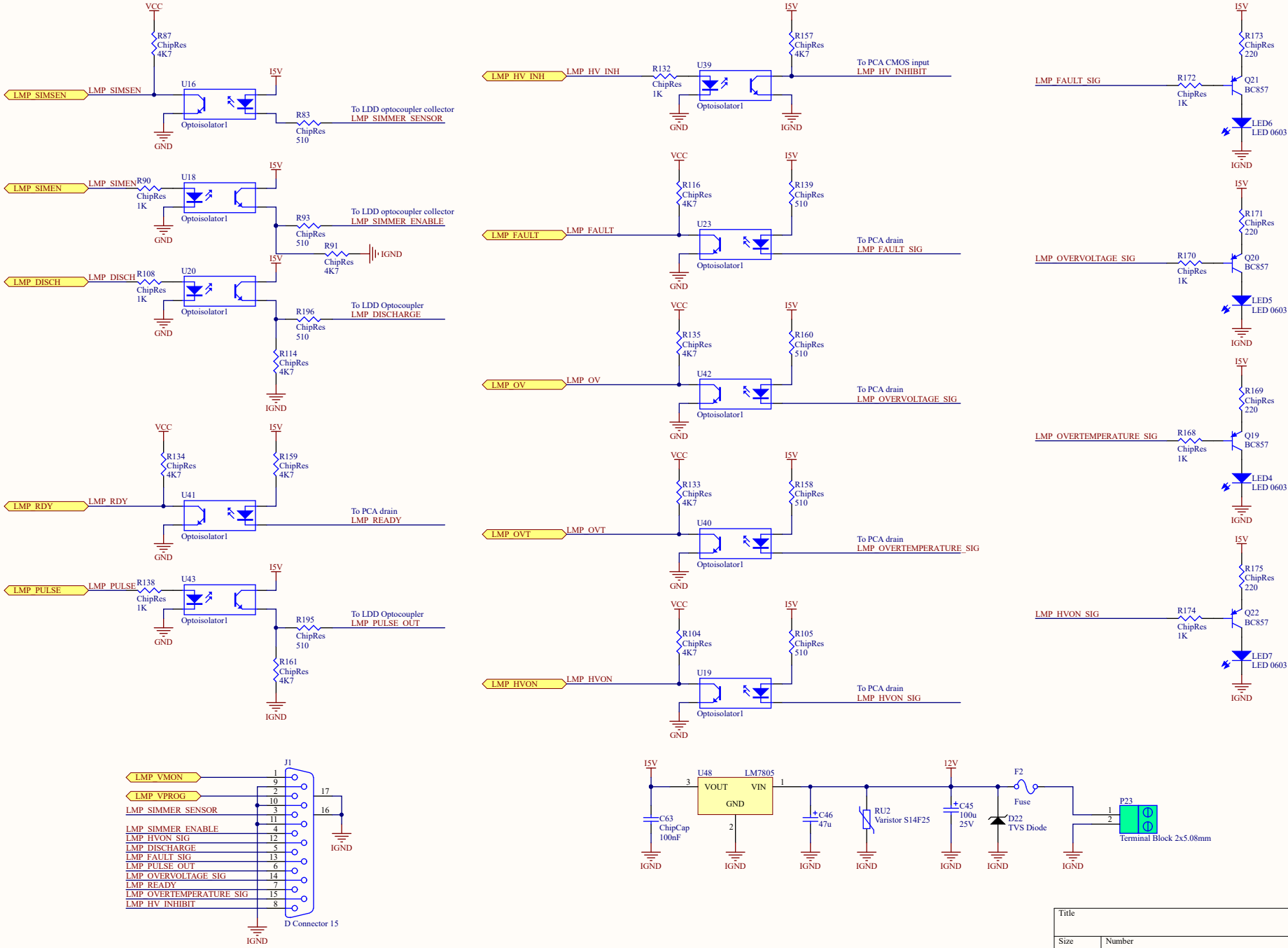

Title		
Size A3	Number	Revision
Date: 9/2/2016		Sheet of
File: C:\Users\..\DischargeModule.SchDoc		Drawn By: