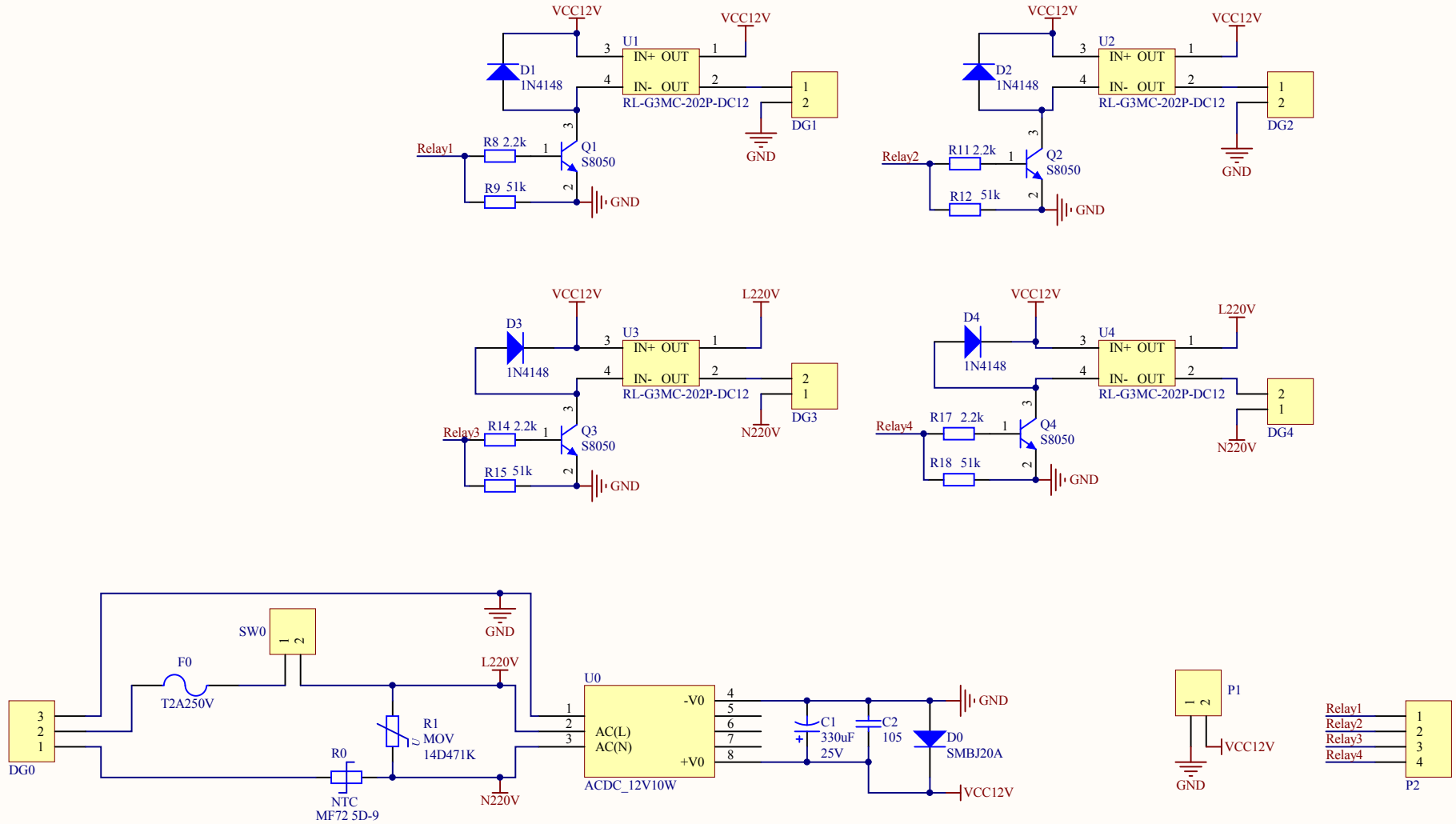

Title		
Size A4	Number	Revision
Date: 2015/12/12	Sheet of	
File: E:\My_GIT\..\Intelligent_Agriculture_Power_Control.Sch	Drawn By:	

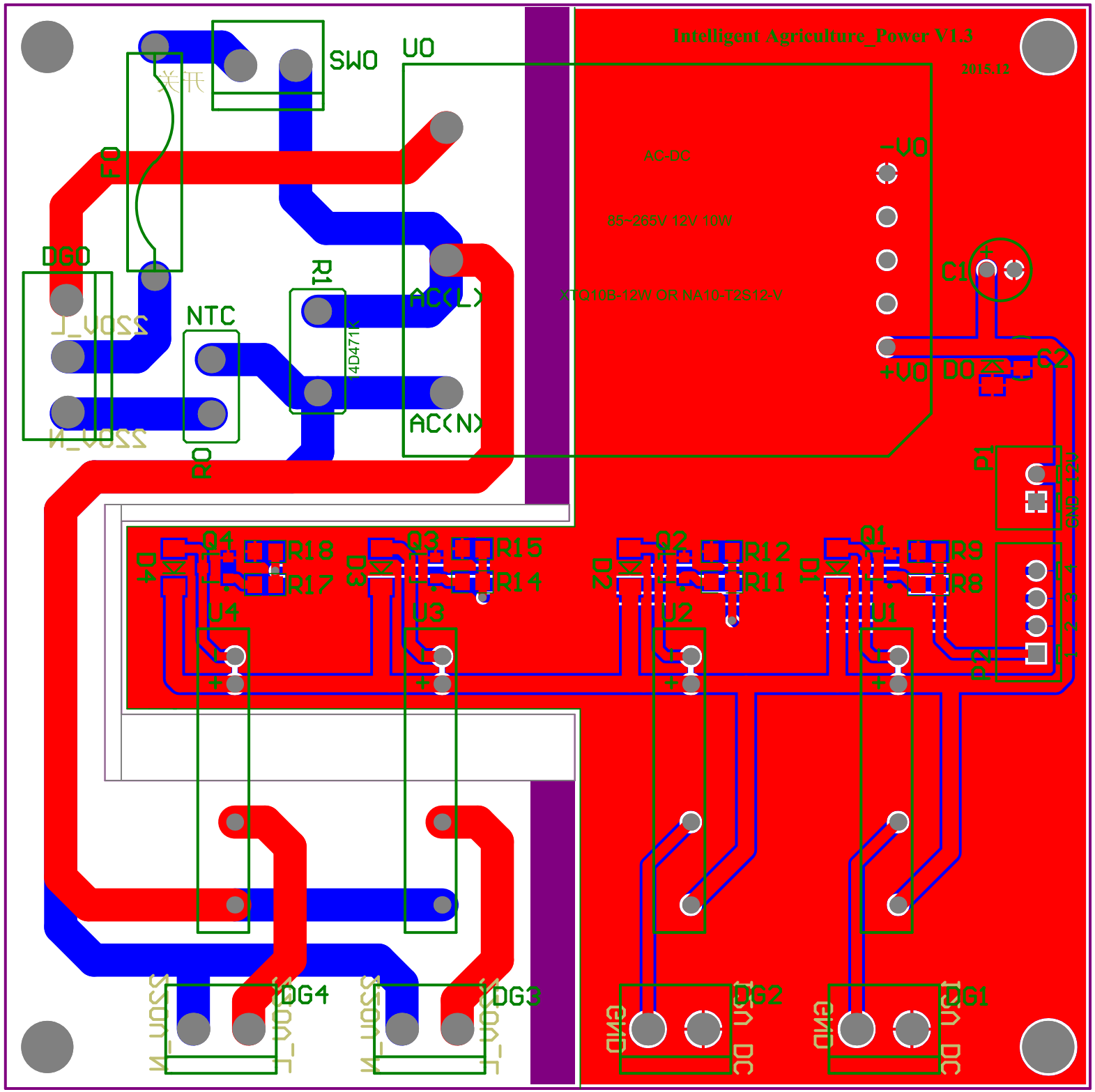
Intelligent Agriculture_Power V1.3
2015.12
AC-DC
85~265V 12V 10W
XTQ10B-12W OR NA10-T2S12-V
SW0
U0
-V0
+V0
D0
C1
C2
F0
DG0
R1
NTC
R0
AC(L)
AC(N)
4D471K
D1
GND 12V
Q4
R18
R17
D4
U4
Q3
R15
R14
D3
U3
Q2
R12
R11
D2
U2
Q1
R9
R8
D1
U1
DG4
DG3
DG2
DG1
GND
DC 12V