Battery Connector

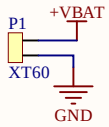

6S LiPo: 22.2V-25.2V

LEDs

~10mA to 15mA through each

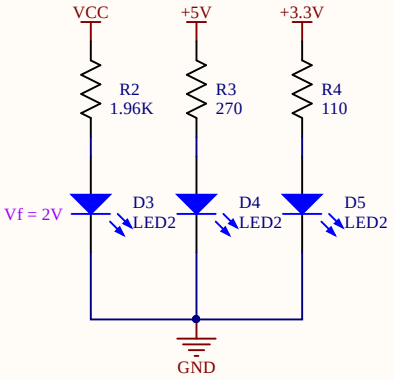

INA226 Slave Address Selector

Jumpers used to connect 1->2 and 3->4. Pull-downs to pull to GND if jumpers not connected.

A1=A0=GND, Slave address is 1000000

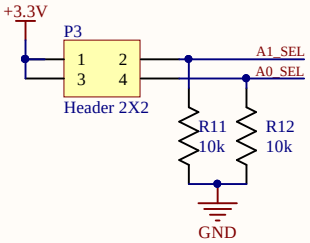

Power Monitoring

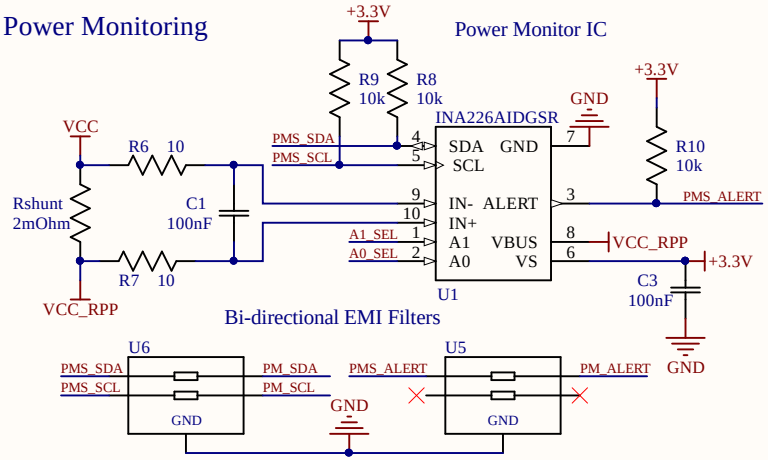

Reverse Polarity Protection

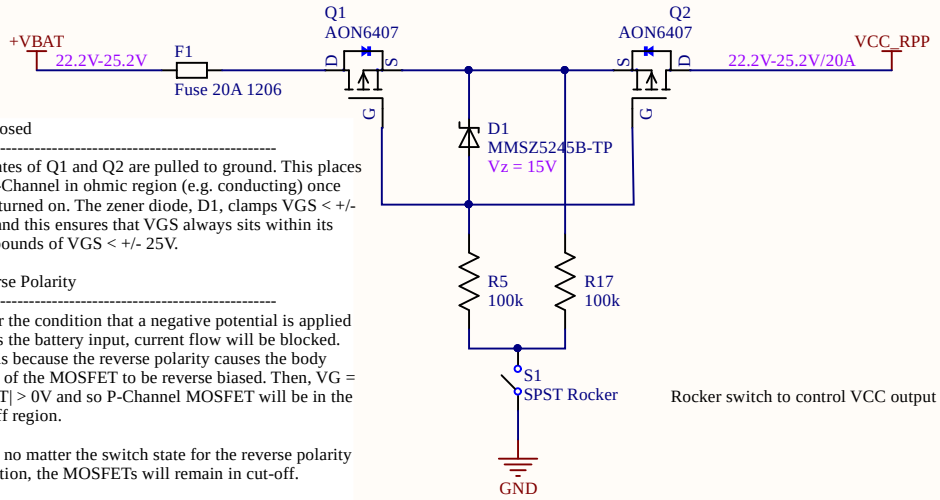

S1 Closed

---

the gates of Q1 and Q2 are pulled to ground. This places the P-Channel in ohmic region (e.g. conducting) once fully turned on. The zener diode, D1, clamps VGS < +/- 15V and this ensures that VGS always sits within its safe bounds of VGS < +/- 25V.

Reverse Polarity

Under the condition that a negative potential is applied across the battery input, current flow will be blocked. This is because the reverse polarity causes the body diode of the MOSFET to be reverse biased. Then, VG = |VBAT| > 0V and so P-Channel MOSFET will be in the cut-off region.

Note: no matter the switch state for the reverse polarity condition, the MOSFETs will remain in cut-off.

Rocker switch to control VCC output

Voltage Regulation

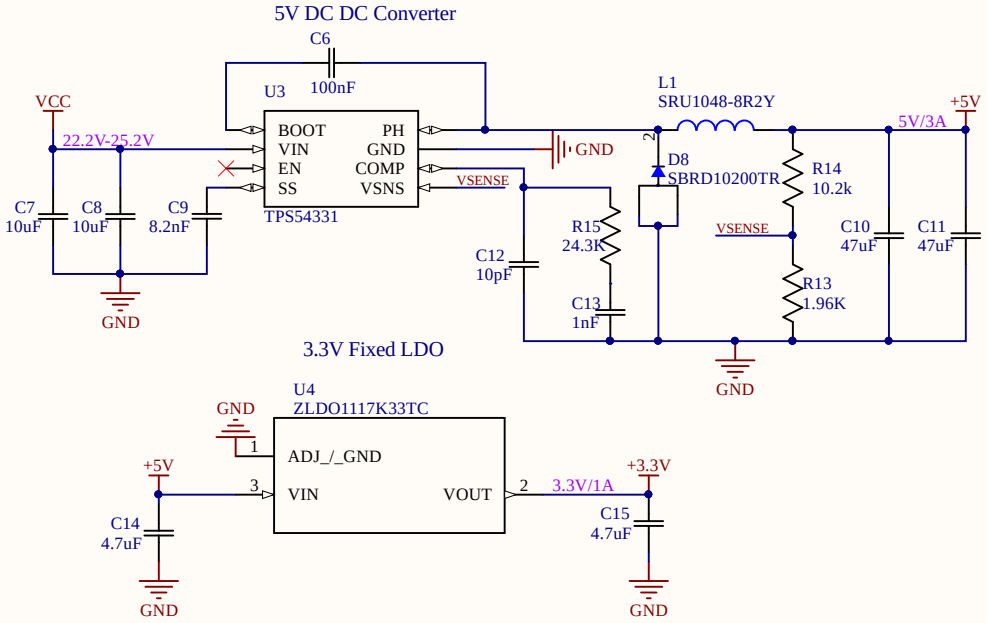

Motor Connectors

VCC for motor windings, +5V for Hall sensors

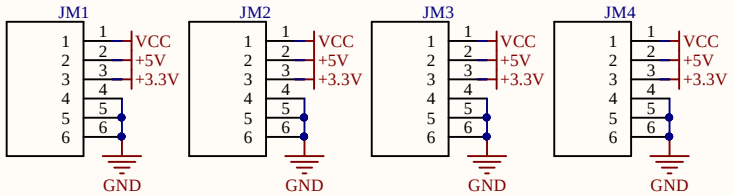

Nucleo Connector

Power monitor lines and +3.3V for Nucleo

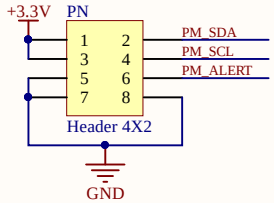

Title: Power Distribution - 2nd Revision		
Size: A4	Number:	Revision: 2
Date: 2020-01-10		Sheet of
File: C:\Users\..\PowerBoard_Rev2.SchDoc		Drawn By: Hannah Sawiuk

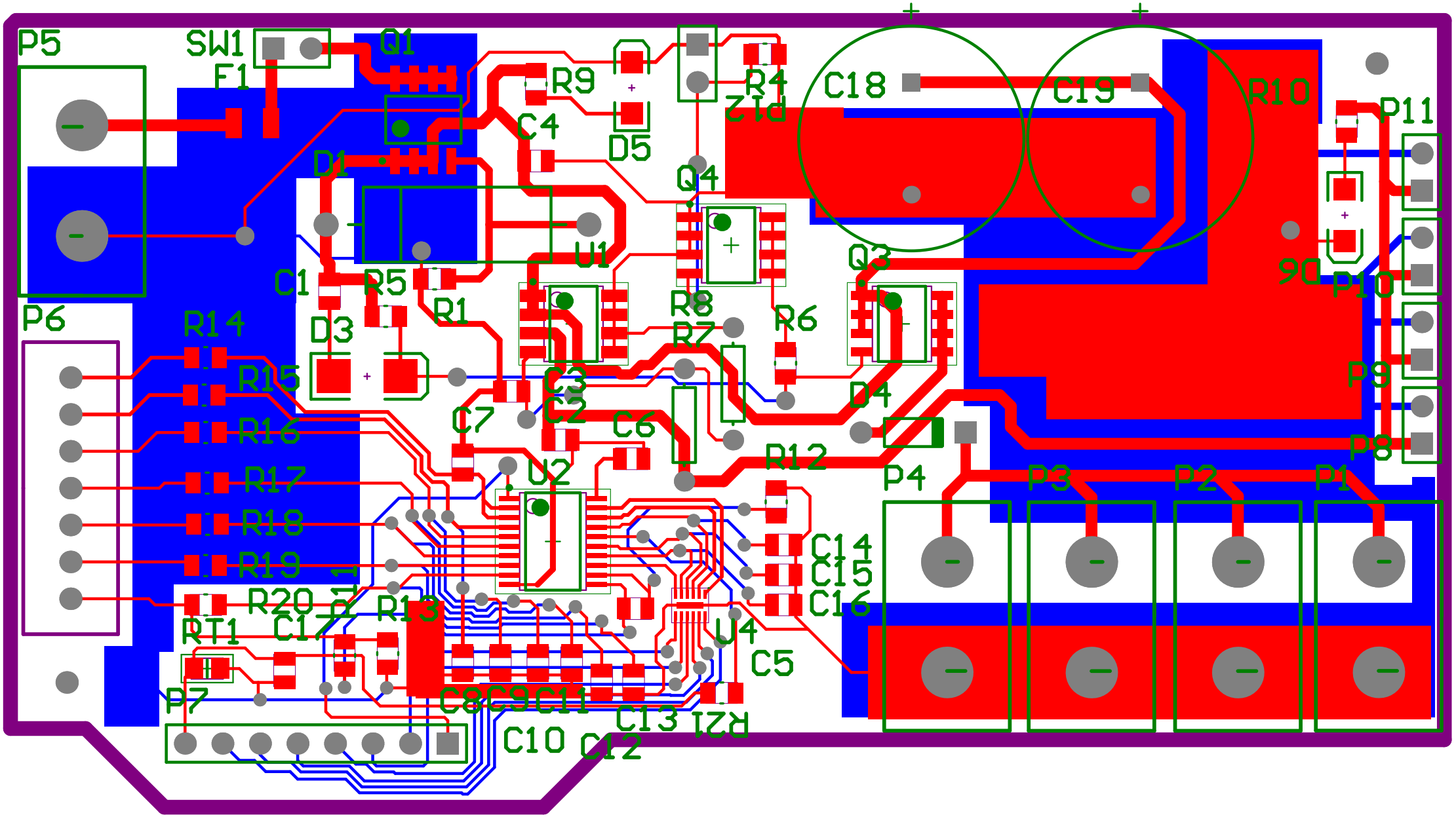
P5
SW1
F1
Q1
R9
D5
R4
ZTd
C18
C19
R10
P11
C4
D1
Q4
U1
Q3
90
P10
C1
R5
R1
R8
R7
R6
P6
R14
D3
R15
C3
C2
D4
P9
R16
C7
C6
R12
P8
R17
U2
P4
P3
P2
P1
R18
C14
C15
C16
R19
R20
R13
RT1
C17
U4
C5
P7
C8
C9
C11
C13
R21
C10
C12

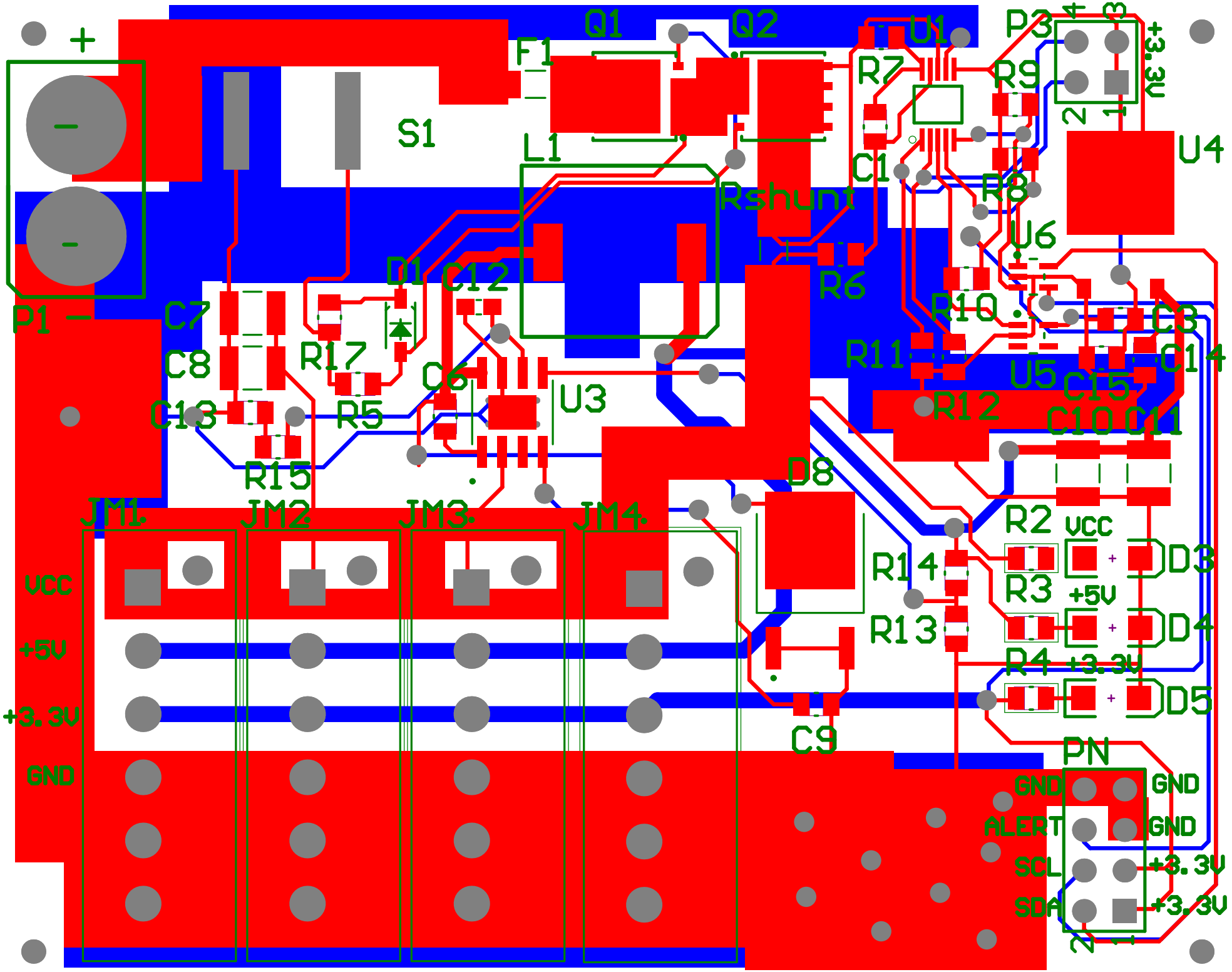
+
-
P1
S1
F1
Q1
Q2
L1
Rshunt
U1
R7
R9
P3
+3.3V
U4
C1
R8
U6
R6
R10
C3
C14
R11
U5
C15
R12
C10
C11
D1
C12
C7
C8
C13
R17
R5
C6
U3
R15
D8
JM1
JM2
JM3
JM4
R2
VCC
D3
R3
+5V
D4
R4
+3.3V
D5
R14
R13
C9
PN
GND
GND
ALERT
GND
SCL
+3.3V
SDA
+3.3V
VCC
+5V
+3.3V
GND

Board S