Sensor Interface

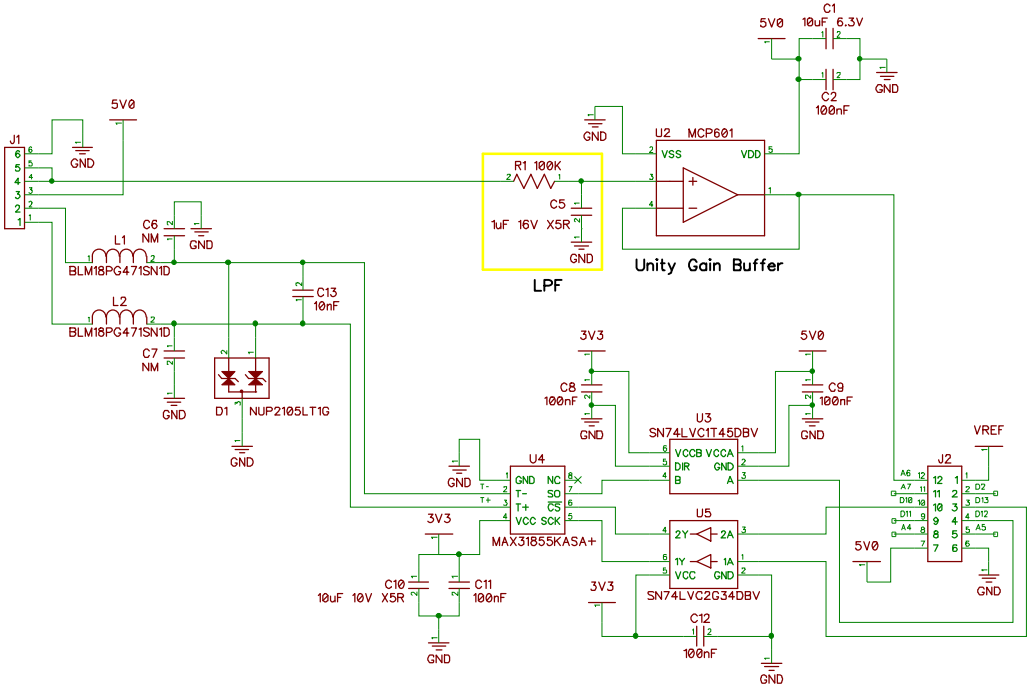

Power Supply

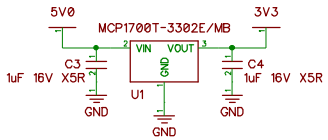

Labels & Fiducial Marks

Title: Temperature Basic	Revision: 1.30
Date: 28-01-2013	Sheet 1
TEMPERATURE-BASIC-1R30.dch	

osPID