Sensor Interface

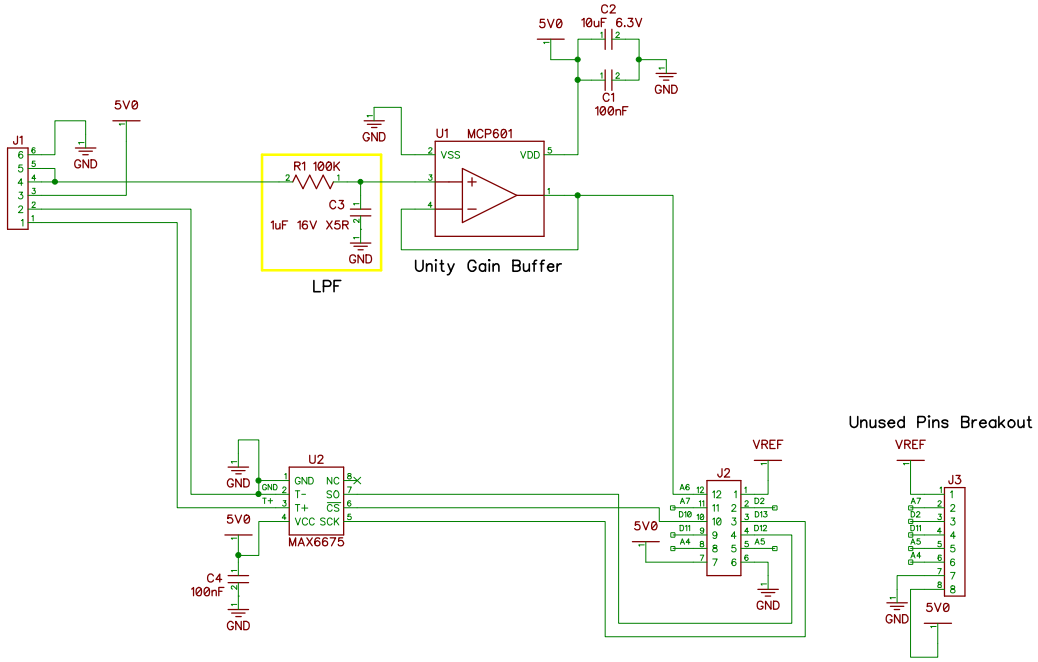

Labels & Fiducial Marks

Title: Temperature Basic	Revision: 1.10	osPID
Date: 01-12-2011	Sheet 1	
TEMPERATURE-BASIC-1R10.dch		