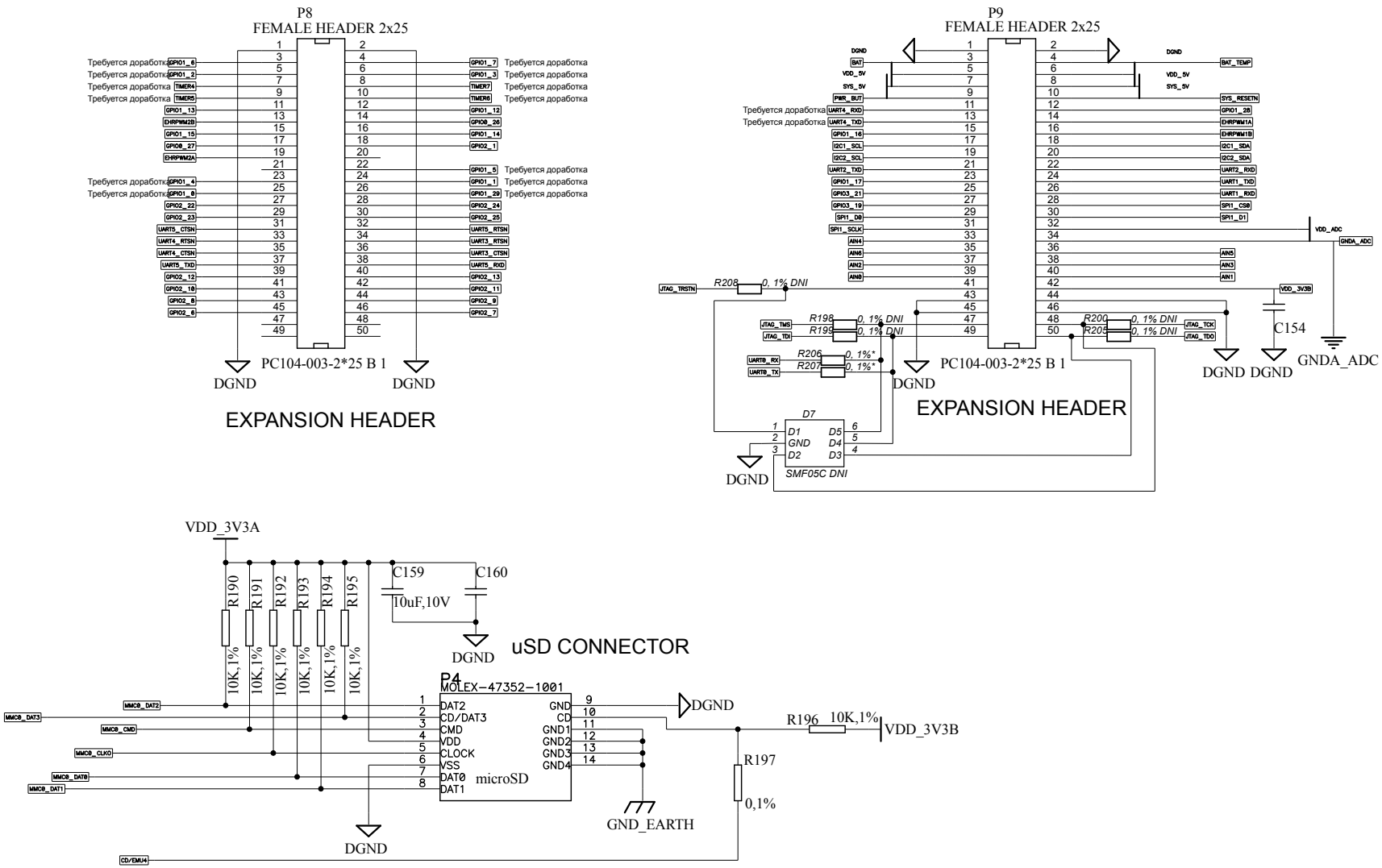
P8
FEMALE HEADER 2x25
PC104-003-2*25 B 1
DGND
DGND
EXPANSION HEADER
P9
FEMALE HEADER 2x25
PC104-003-2*25 B 1
EXPANSION HEADER
DGND
DGND DGND
GNDA_ADC
R208 0, 1% DNI
R198 0, 1% DNI
R199 0, 1% DNI
R206 0, 1%*
R207 0, 1%*
R200 0, 1% DNI
R205 0, 1% DNI
C154
D7
SMF05C DNI
VDD_3V3A
R190
R191
R192
R193
R194
R195
10K,1%
C159
10uF,10V
C160
DGND
uSD CONNECTOR
P4
MOLEX-47352-1001
DAT2
CD/DAT3
CMD
VDD
CLOCK
VSS
DAT0
DAT1
GND
CD
GND1
GND2
GND3
GND4
microSD
DGND
R196 10K,1%
VDD_3V3B
R197
0,1%
GND_EARTH
DGND
MMC0_DAT2
MMC0_DAT3
MMC0_CMD
MMC0_CLKO
MMC0_DAT0
MMC0_DAT1
CD/EMU4