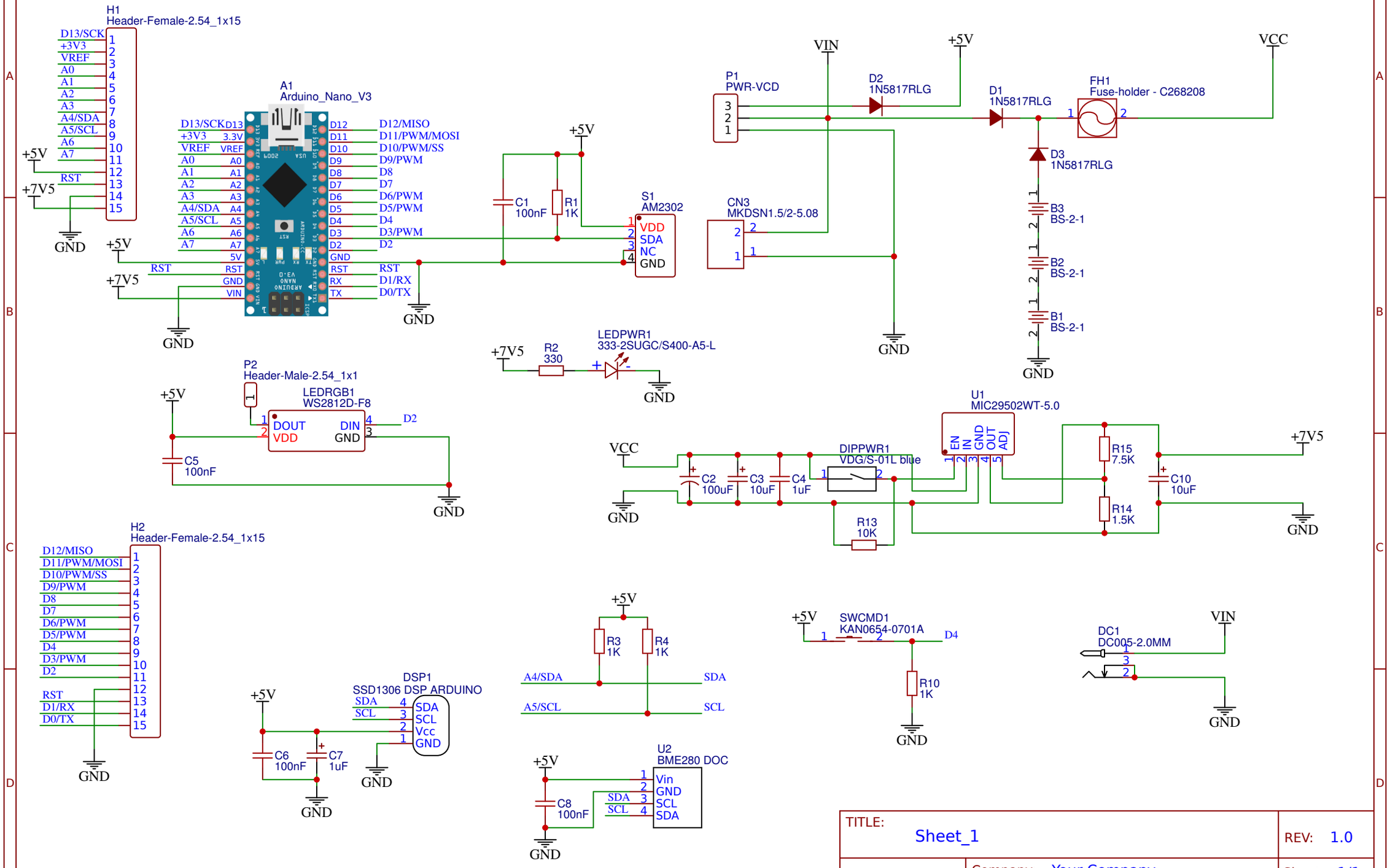
H1
Header-Female-2.54_1x15
D13/SCK
+3V3
VREF
A0
A1
A2
A3
A4/SDA
A5/SCL
A6
A7
RST
+5V
+7V5
GND
A1
Arduino_Nano_V3
D12/MISO
D11/PWM/MOSI
D10/PWM/SS
D9/PWM
D8
D7
D6/PWM
D5/PWM
D4
D3/PWM
D2
D1/RX
D0/TX
C1
100nF
R1
1K
S1
AM2302
VDD
SDA
NC
GND
P1
PWR-VCD
VIN
D2
1N5817RLG
D1
1N5817RLG
FH1
Fuse-holder - C268208
VCC
D3
1N5817RLG
CN3
MKDSN1.5/2-5.08
B3
BS-2-1
B2
BS-2-1
B1
BS-2-1
P2
Header-Male-2.54_1x1
LEDRGB1
WS2812D-F8
DOUT
VDD
DIN
GND
C5
100nF
R2
330
LEDPWR1
333-2SUGC/S400-A5-L
U1
MIC29502WT-5.0
EN
IN
GND
OUT
ADJ
DIPPWR1
VDG/S-01L blue
C2
100uF
C3
10uF
C4
1uF
R13
10K
R15
7.5K
R14
1.5K
C10
10uF
H2
Header-Female-2.54_1x15
DSP1
SSD1306 DSP ARDUINO
Vcc
C6
100nF
C7
1uF
R3
1K
R4
1K
SWCMD1
KAN0654-0701A
D4
R10
1K
DC1
DC005-2.0MM
U2
BME280 DOC
Vin
C8
100nF
TITLE:
Sheet_1
REV: 1.0
Company: Your Company
Sheet: 1/1
Date: 2019-09-30
Drawn By: NickF93
EasyEDA