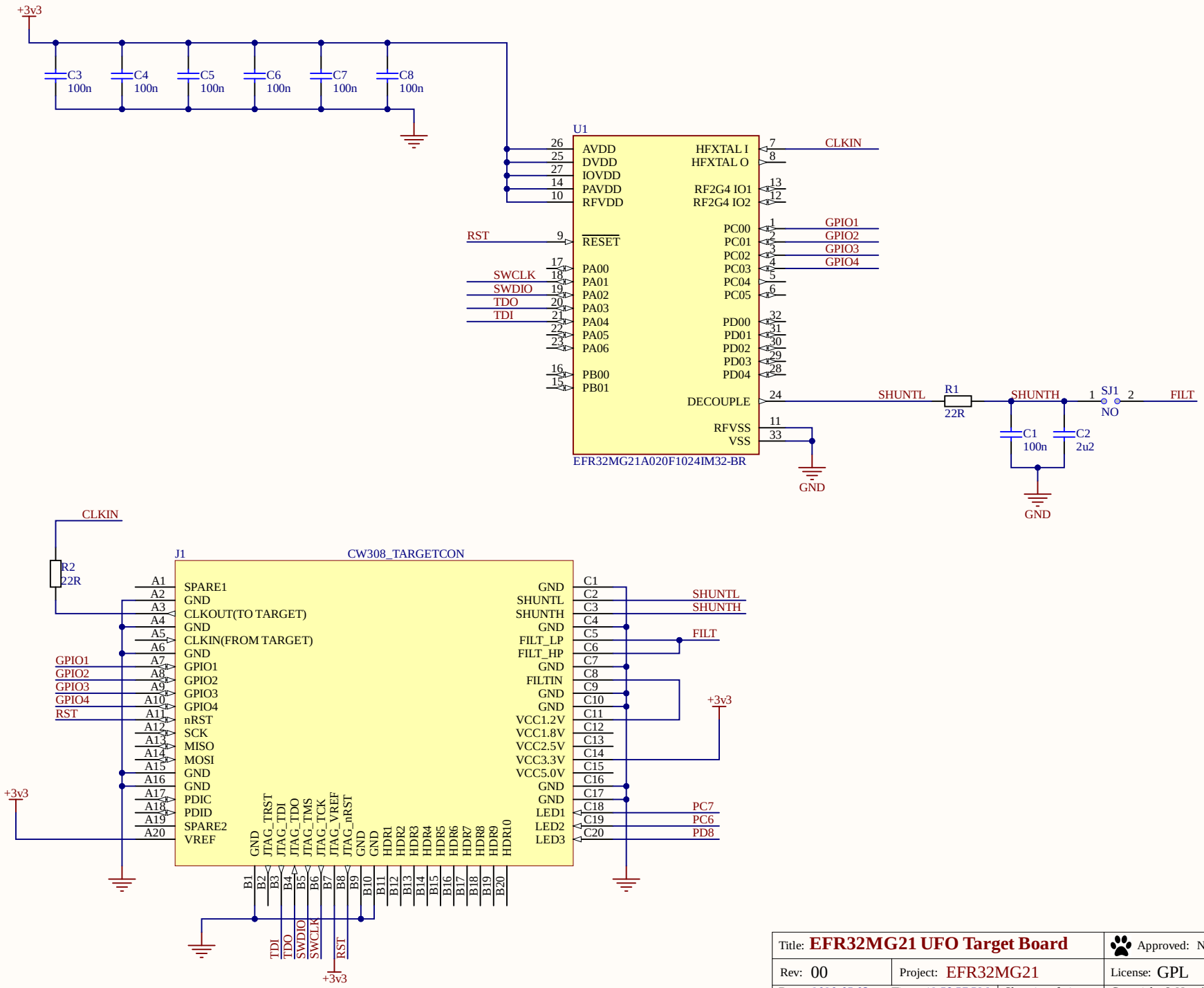

Title: **EFR32MG21 UFO Target Board**		Approved: NO	NewAE Technology
Rev: 00	Project: EFR32MG21	License: GPL	
Date: 2020-05-03	Time: 12:58:57 PM	Sheet1 of 1	Copyright © NewAE Technology Inc. NewAE.com
File: CW308T_EFR32MG21.SchDoc			