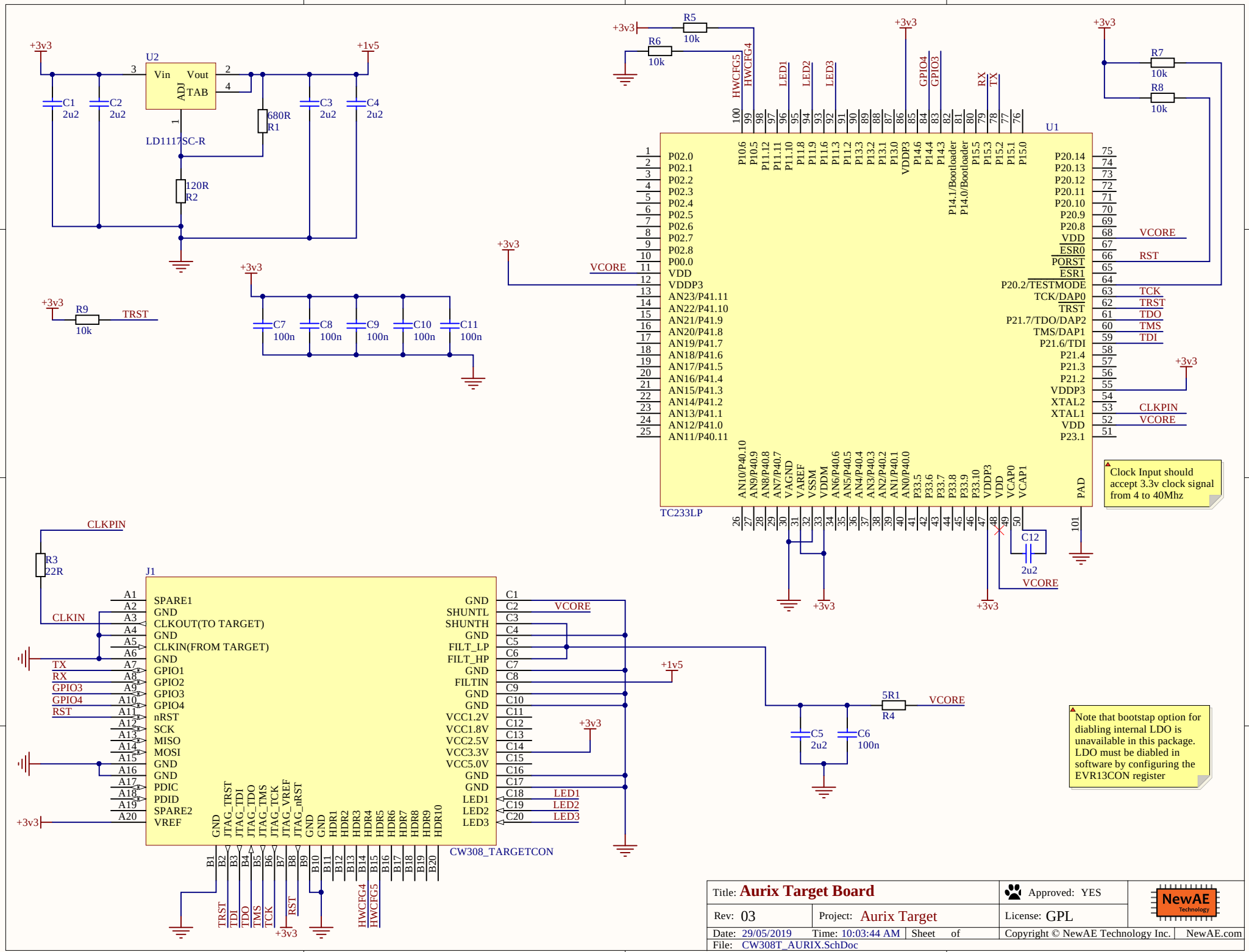
U2
LD1117SC-R
Vin
Vout
ADJ
TAB
C1 2u2
C2 2u2
C3 2u2
C4 2u2
680R R1
120R R2
+3v3
+1v5
R9 10k
TRST
C7 100n
C8 100n
C9 100n
C10 100n
C11 100n
R5 10k
R6 10k
R7 10k
R8 10k
HWCFG5
HWCFG4
LED1
LED2
LED3
GPIO4
GPIO3
RX
TX
U1
TC233LP
VCORE
RST
TCK
TRST
TDO
TMS
TDI
CLKPIN
C12 2u2
Clock Input should accept 3.3v clock signal from 4 to 40Mhz
R3 22R
J1
CW308_TARGETCON
SPARE1
GND
CLKOUT(TO TARGET)
CLKIN(FROM TARGET)
GPIO1
GPIO2
GPIO3
GPIO4
nRST
SCK
MISO
MOSI
PDIC
PDID
SPARE2
VREF
SHUNTL
SHUNTH
FILT_LP
FILT_HP
FILTIN
VCC1.2V
VCC1.8V
VCC2.5V
VCC3.3V
VCC5.0V
5R1 R4
C5 2u2
C6 100n
Note that bootstap option for diabling internal LDO is unavailable in this package. LDO must be diabled in software by configuring the EVR13CON register
Title: Aurix Target Board
Approved: YES
Rev: 03
Project: Aurix Target
License: GPL
Date: 29/05/2019
Time: 10:03:44 AM
Sheet of
Copyright © NewAE Technology Inc.
NewAE.com
File: CW308T_AURIX.SchDoc
NewAE Technology