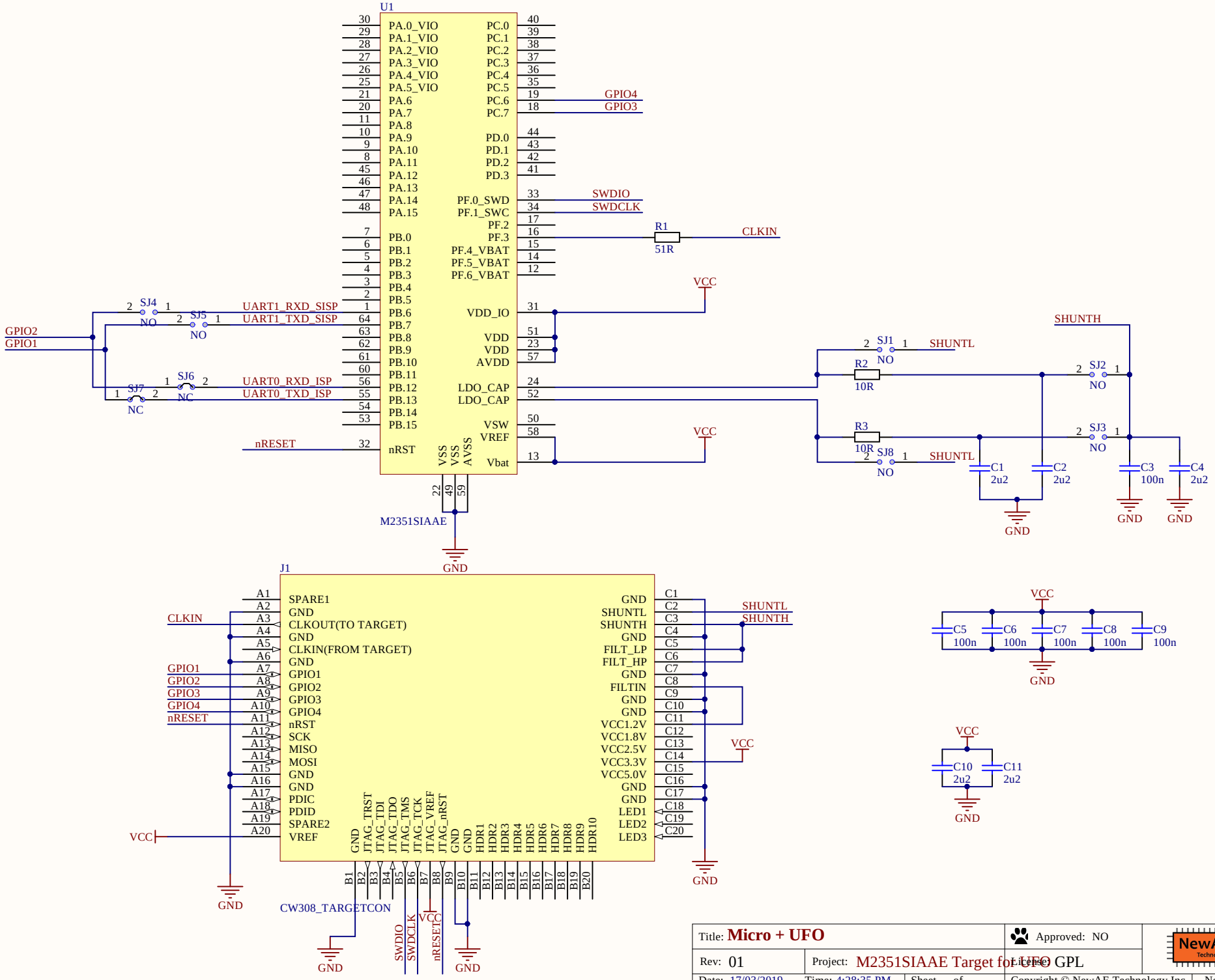

Title: **Micro + UFO**		Approved: NO	NewAE Technology
Rev: 01	Project: M2351SIAAE Target for UFO	License: GPL	
Date: 17/03/2019	Time: 4:28:35 PM	Sheet of	Copyright © NewAE Technology Inc. NewAE.com
File: CW308T_M2351_Main.SchDoc			