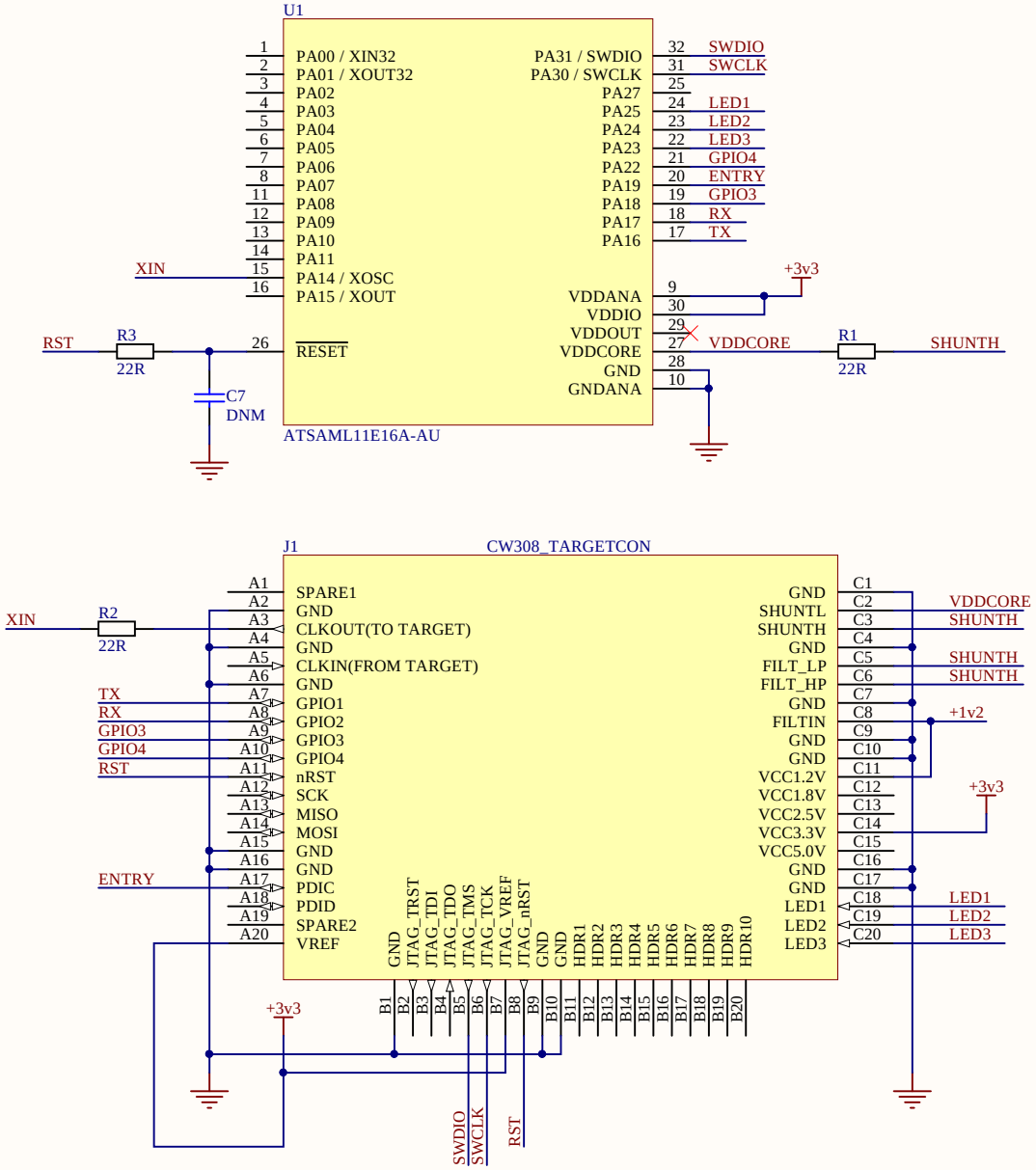

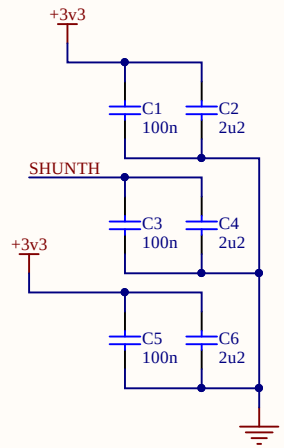

Title: **CW308T-SAML11 Microcontroller**		Approved: YES	NewAE Technology
Rev: 02	Project: SAML11 Target	License: GPL	
Date: 30/05/2019	Time: 2:34:35 PM	Sheet of	Copyright © NewAE Technology Inc. NewAE.com
File: CW308T_ATSAML11.SchDoc			