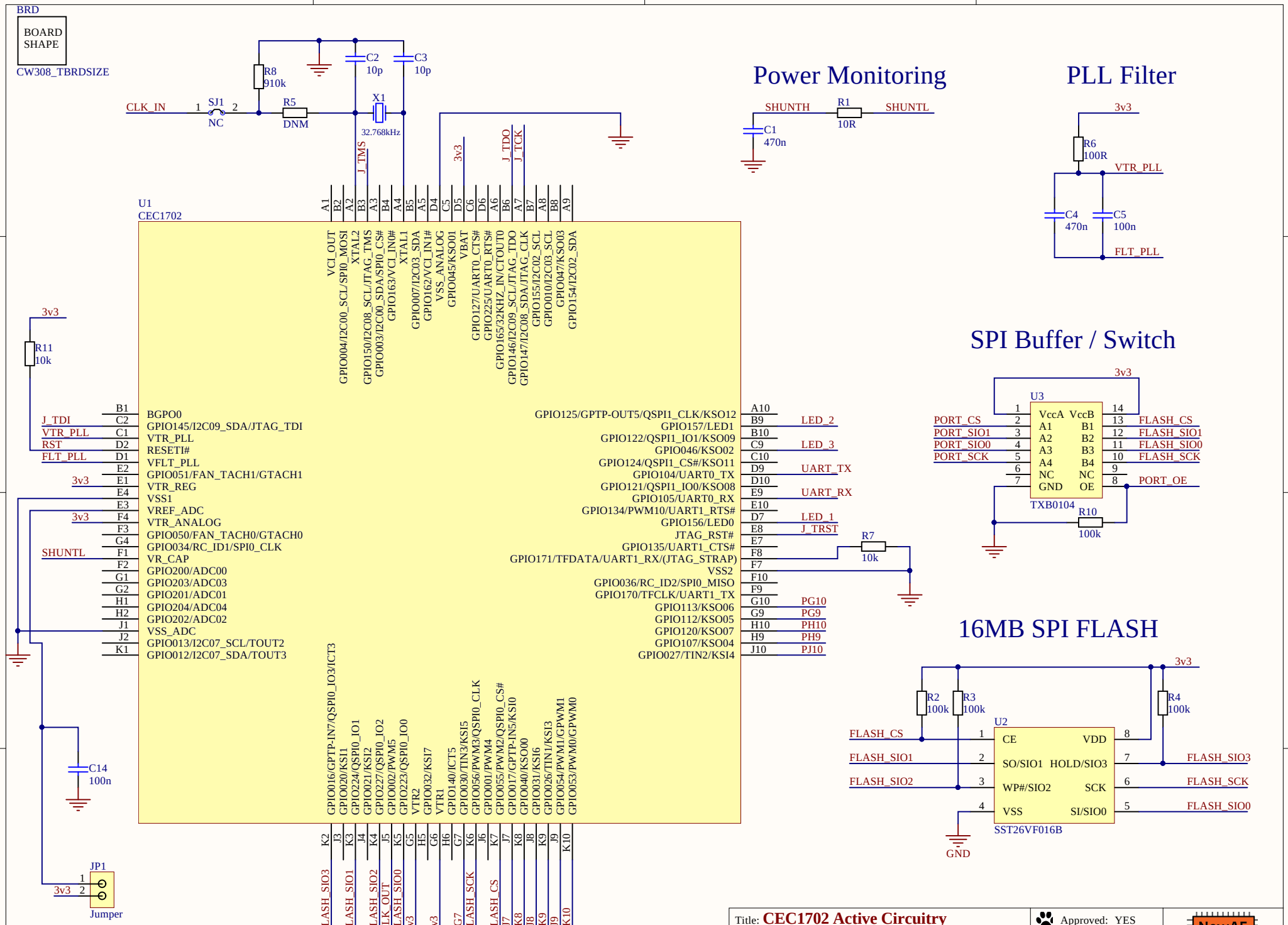
BRD
BOARD SHAPE
CW308_TBRDSIZE
CLK_IN
SJ1
NC
R8 910k
R5 DNM
C2 10p
C3 10p
X1
32.768kHz
J_TMS
3v3
J_TDO
J_TCK
U1
CEC1702
VCL_OUT
GPIO004/I2C00_SCL/SPI0_MOSI
XTAL2
GPIO150/I2C08_SCL/JTAG_TMS
GPIO003/I2C00_SDA/SPI0_CS#
GPIO163/VCL_IN0#
XTAL1
GPIO007/I2C03_SDA
GPIO162/VCL_IN1#
VSS_ANALOG
GPIO045/KSO01
VBAT
GPIO127/UART0_CTS#
GPIO225/UART0_RTS#
GPIO165/32KHZ_IN/CTOUT0
GPIO146/I2C09_SCL/JTAG_TDO
GPIO147/I2C08_SDA/JTAG_CLK
GPIO155/I2C02_SCL
GPIO010/I2C03_SCL
GPIO047/KSO03
GPIO154/I2C02_SDA
BGPO0
GPIO145/I2C09_SDA/JTAG_TDI
VTR_PLL
RESETI#
VFLT_PLL
GPIO051/FAN_TACH1/GTACH1
VTR_REG
VSS1
VREF_ADC
VTR_ANALOG
GPIO050/FAN_TACH0/GTACH0
GPIO034/RC_ID1/SPI0_CLK
VR_CAP
GPIO200/ADC00
GPIO203/ADC03
GPIO201/ADC01
GPIO204/ADC04
GPIO202/ADC02
VSS_ADC
GPIO013/I2C07_SCL/TOUT2
GPIO012/I2C07_SDA/TOUT3
GPIO125/GPTP-OUT5/QSPI1_CLK/KSO12
GPIO157/LED1
GPIO122/QSPI1_IO1/KSO09
GPIO046/KSO02
GPIO124/QSPI1_CS#/KSO11
GPIO104/UART0_TX
GPIO121/QSPI1_IO0/KSO08
GPIO105/UART0_RX
GPIO134/PWM10/UART1_RTS#
GPIO156/LED0
JTAG_RST#
GPIO135/UART1_CTS#
GPIO171/TFDATA/UART1_RX/(JTAG_STRAP)
VSS2
GPIO036/RC_ID2/SPI0_MISO
GPIO170/TFCLK/UART1_TX
GPIO113/KSO06
GPIO112/KSO05
GPIO120/KSO07
GPIO107/KSO04
GPIO027/TIN2/KSI4
GPIO016/GPTP-IN7/QSPI0_IO3/ICT3
GPIO020/KSI1
GPIO224/QSPI0_IO1
GPIO021/KSI2
GPIO227/QSPI0_IO2
GPIO002/PWM5
GPIO223/QSPI0_IO0
VTR2
GPIO032/KSI7
VTR1
GPIO140/ICT5
GPIO030/TIN3/KSI5
GPIO056/PWM3/QSPI0_CLK
GPIO001/PWM4
GPIO055/PWM2/QSPI0_CS#
GPIO017/GPTP-IN5/KSI0
GPIO040/KSO00
GPIO031/KSI6
GPIO026/TIN1/KSI3
GPIO054/PWM1/GPWM1
GPIO053/PWM0/GPWM0
J_TDI
VTR_PLL
RST
FLT_PLL
SHUNTL
LED_2
LED_3
UART_TX
UART_RX
LED_1
J_TRST
PG10
PG9
PH10
PH9
PJ10
R11 10k
C14 100n
R7 10k
JP1
Jumper
FLASH_SIO3
FLASH_SIO1
FLASH_SIO2
CLK_OUT
FLASH_SIO0
PG7
FLASH_SCK
FLASH_CS
PJ7
PK8
PJ8
PK9
PJ9
PK10
Power Monitoring
SHUNTH
R1 10R
SHUNTL
C1 470n
PLL Filter
R6 100R
VTR_PLL
C4 470n
C5 100n
FLT_PLL
SPI Buffer / Switch
U3
VccA VccB
A1 B1
A2 B2
A3 B3
A4 B4
NC NC
GND OE
TXB0104
PORT_CS
PORT_SIO1
PORT_SIO0
PORT_SCK
FLASH_CS
FLASH_SIO1
FLASH_SIO0
FLASH_SCK
PORT_OE
R10 100k
16MB SPI FLASH
U2
R2 100k
R3 100k
R4 100k
CE
VDD
SO/SIO1
HOLD/SIO3
WP#/SIO2
SCK
VSS
SI/SIO0
SST26VF016B
FLASH_CS
FLASH_SIO1
FLASH_SIO2
FLASH_SIO3
FLASH_SCK
FLASH_SIO0
GND
Title: CEC1702 Active Circuitry
Approved: YES
Rev: 01
Project: CEC1702 Target
License: GPL
Date: 30/05/2019
Time: 2:47:06 PM
Sheet1 of 2
Copyright © NewAE Technology Inc.
NewAE.com
File: CW308T_CEC1702_MICRO.SchDoc

Pin Connections

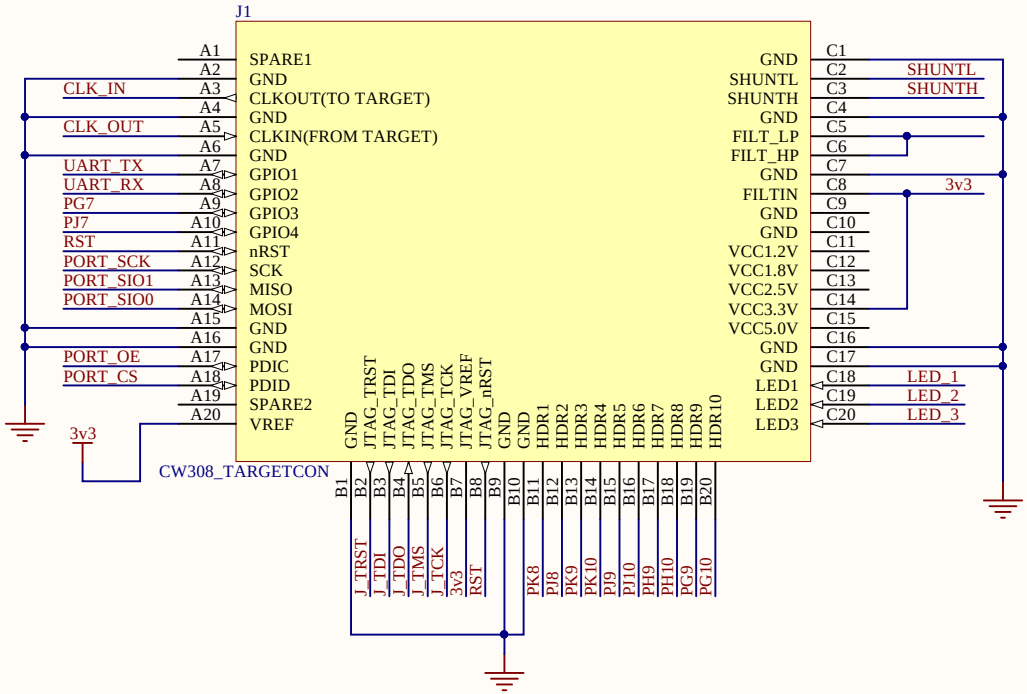

Decoupling Capacitors

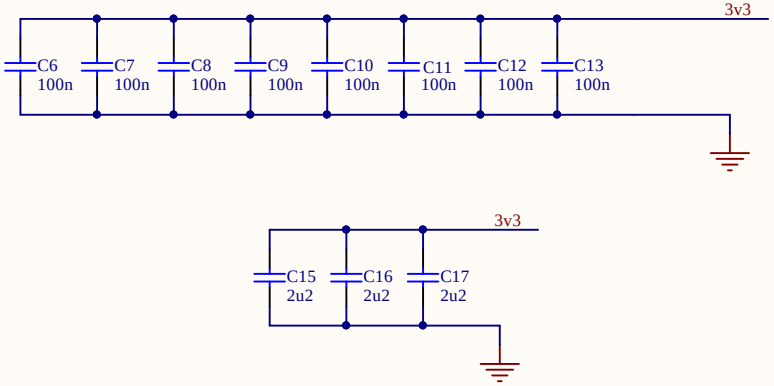

Title: **CEC1702 Target Pin Connections**		Approved: YES	NewAE Technology
Rev: 01	Project: CEC1702 Target	License: GPL	
Date: 30/05/2019	Time: 2:47:06 PM	Sheet2 of 2	Copyright © NewAE Technology Inc. NewAE.com
File: CW308T_CEC1702_UFO.SchDoc			