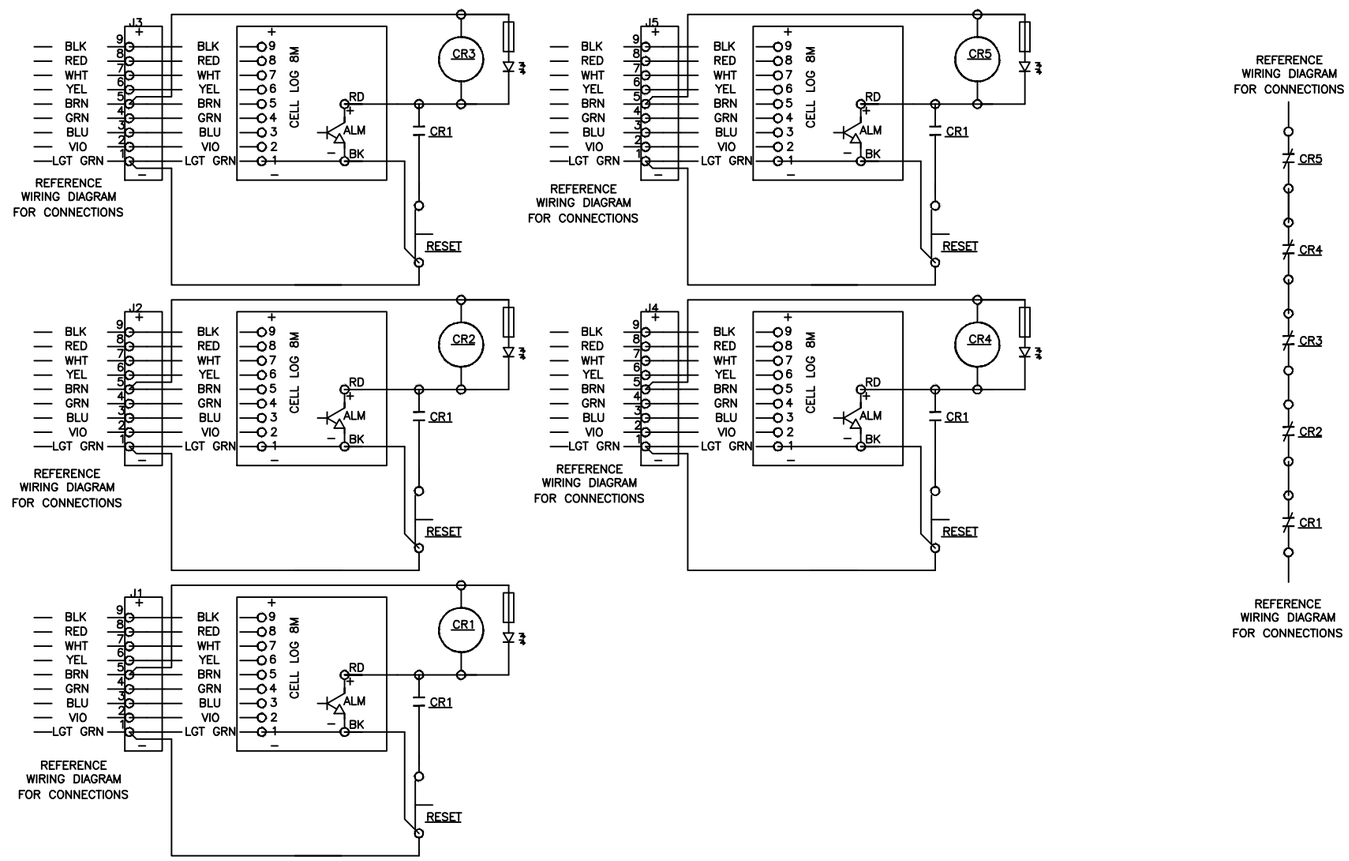

ELEM DIAGRAM – 95 HONDA DEL SOL
ELECTRIC VEHICLE – RELAY BOARD
125VDC SYSTEM
THOMAS BLAIR

REV.	DESCRIPTION	REV.	DESCRIPTION	REV.	DESCRIPTION	REV.	DESCRIPTION	REV.	DESCRIPTION	REV.	DESCRIPTION	ISSUE	DESCRIPTION	10/14	DATE
										1	ASBUILT FOR RELAY BOARD	0	ORIGINAL ISSUE	THB	DWN.
											THB				CK'D.
															APPR.

ENERGY SUPPLY – GENERATION ENGINEERING

TEC TAMPA ELECTRIC

REV. 1