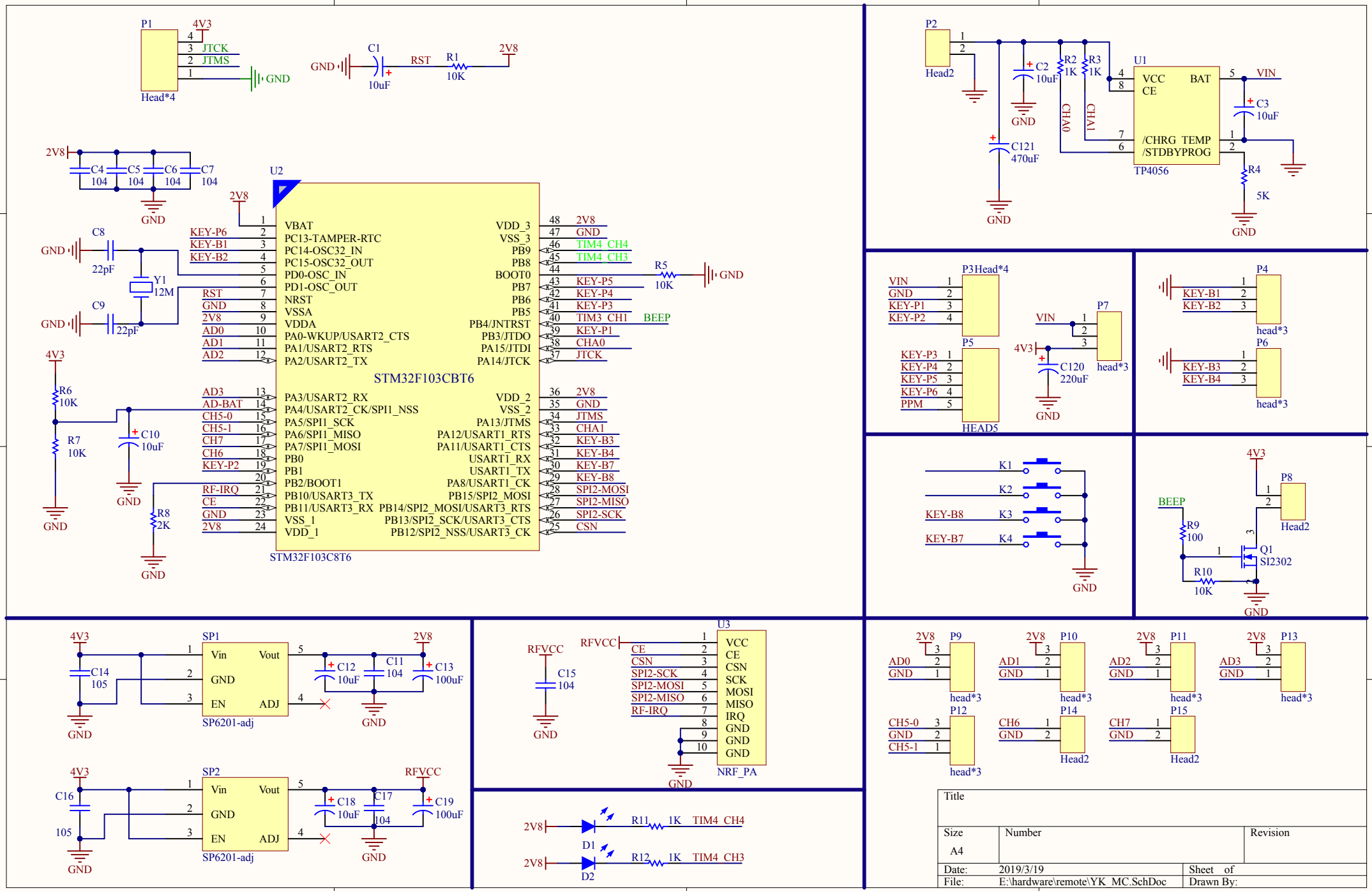
P1
Head*4
4V3
JTCK
JTMS
GND
C1
10uF
RST
R1
10K
2V8
C4 104
C5 104
C6 104
C7 104
U2
STM32F103CBT6
STM32F103C8T6
VBAT
PC13-TAMPER-RTC
PC14-OSC32_IN
PC15-OSC32_OUT
PD0-OSC_IN
PD1-OSC_OUT
NRST
VSSA
VDDA
PA0-WKUP/USART2_CTS
PA1/USART2_RTS
PA2/USART2_TX
PA3/USART2_RX
PA4/USART2_CK/SPI1_NSS
PA5/SPI1_SCK
PA6/SPI1_MISO
PA7/SPI1_MOSI
PB0
PB1
PB2/BOOT1
PB10/USART3_TX
PB11/USART3_RX
VSS_1
VDD_1
VDD_3
VSS_3
PB9
PB8
BOOT0
PB7
PB6
PB5
PB4/JNTRST
PB3/JTDO
PA15/JTDI
PA14/JTCK
VDD_2
VSS_2
PA13/JTMS
PA12/USART1_RTS
PA11/USART1_CTS
USART1_RX
USART1_TX
PA8/USART1_CK
PB15/SPI2_MOSI
PB14/SPI2_MOSI/USART3_RTS
PB13/SPI2_SCK/USART3_CTS
PB12/SPI2_NSS/USART3_CK
KEY-P6
KEY-B1
KEY-B2
RST
GND
2V8
AD0
AD1
AD2
AD3
AD-BAT
CH5-0
CH5-1
CH7
CH6
KEY-P2
RF-IRQ
CE
TIM4_CH4
TIM4_CH3
KEY-P5
KEY-P4
KEY-P3
TIM3_CH1
KEY-P1
CHA0
JTCK
JTMS
CHA1
KEY-B3
KEY-B4
KEY-B7
KEY-B8
SPI2-MOSI
SPI2-MISO
SPI2-SCK
CSN
BEEP
C8 22pF
C9 22pF
Y1 12M
R5 10K
R6 10K
R7 10K
C10 10uF
R8 2K
P2
Head2
C2 10uF
R2 1K
R3 1K
U1
TP4056
VCC
CE
BAT
/CHRG
/STDBYPROG
TEMP
VIN
C3 10uF
R4 5K
C121 470uF
P3 Head*4
P5
HEAD5
P7
head*3
C120 220uF
P4
P6
K1
K2
K3
K4
P8
R9 100
R10 10K
Q1 SI2302
SP1
SP6201-adj
Vin
Vout
EN
ADJ
C14 105
C11 104
C12 10uF
C13 100uF
SP2
C16 105
C17 104
C18 10uF
C19 100uF
RFVCC
C15 104
U3
NRF_PA
SCK
MISO
IRQ
D1
D2
R11 1K
R12 1K
P9
P10
P11
P12
P13
P14
P15
Title
Size
A4
Number
Revision
Date: 2019/3/19
Sheet of
File: E:\hardware\remote\YK_MC.SchDoc
Drawn By: