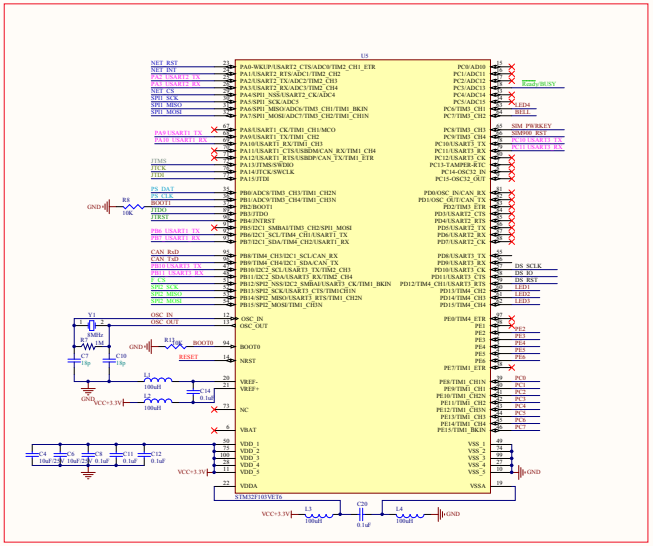

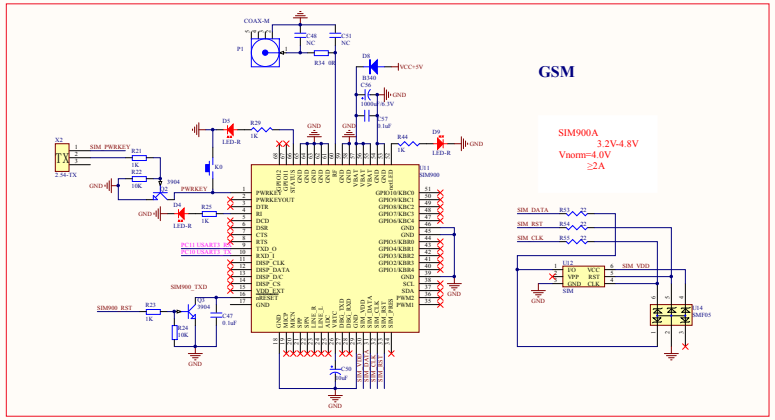

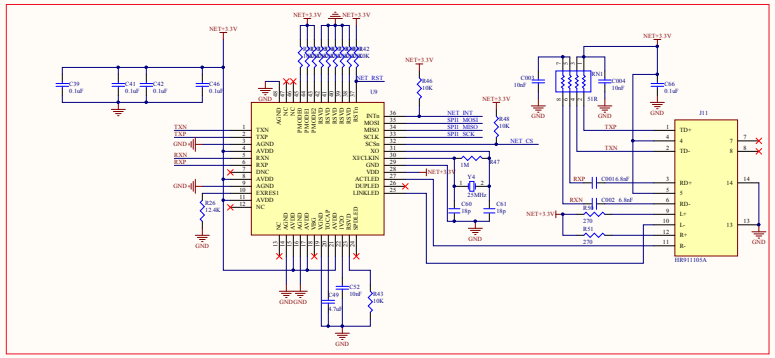

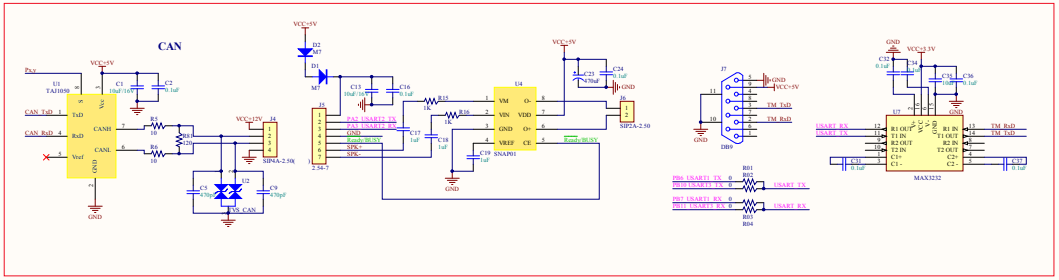

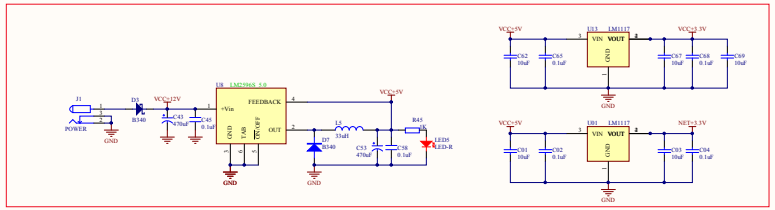

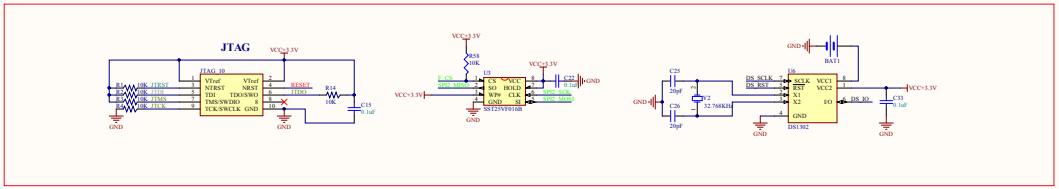

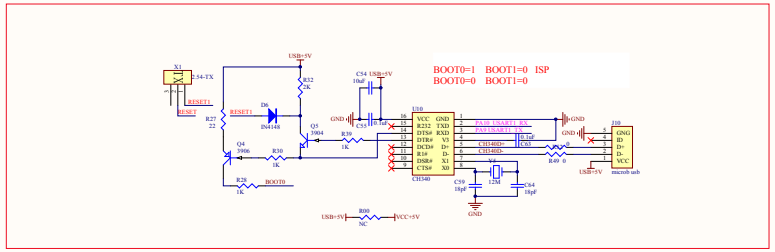

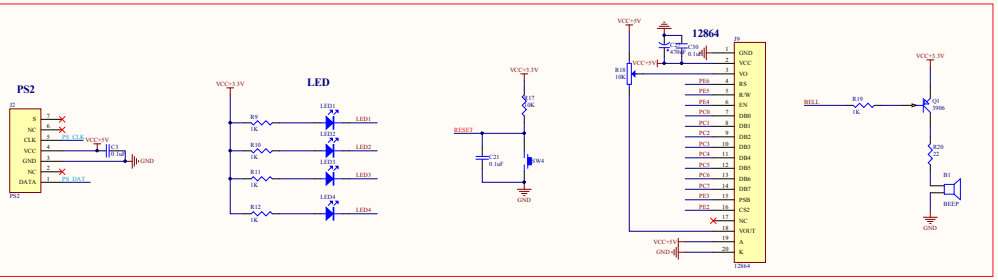

Title			
Size: A1	Number		Revision
Date: 2014/11/18		Sheet of	
File: F:\		Drawn By:	

V1.0.SchDoc