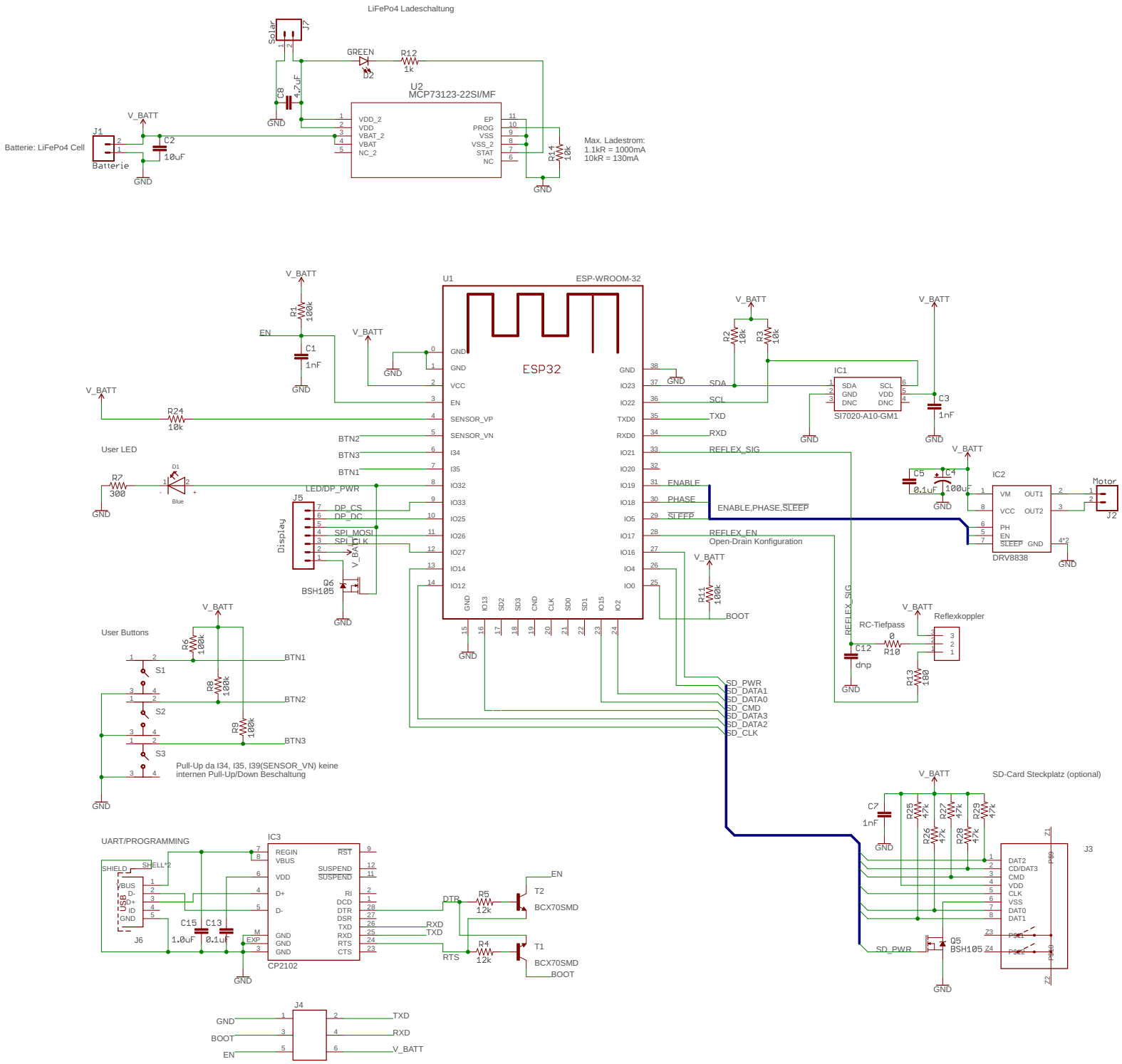

07.04.2018 14:51 f=0.61 D:\Workspace\max_pcb\MAXboard\MAXboard_V2.sch (Sheet: 1/1)