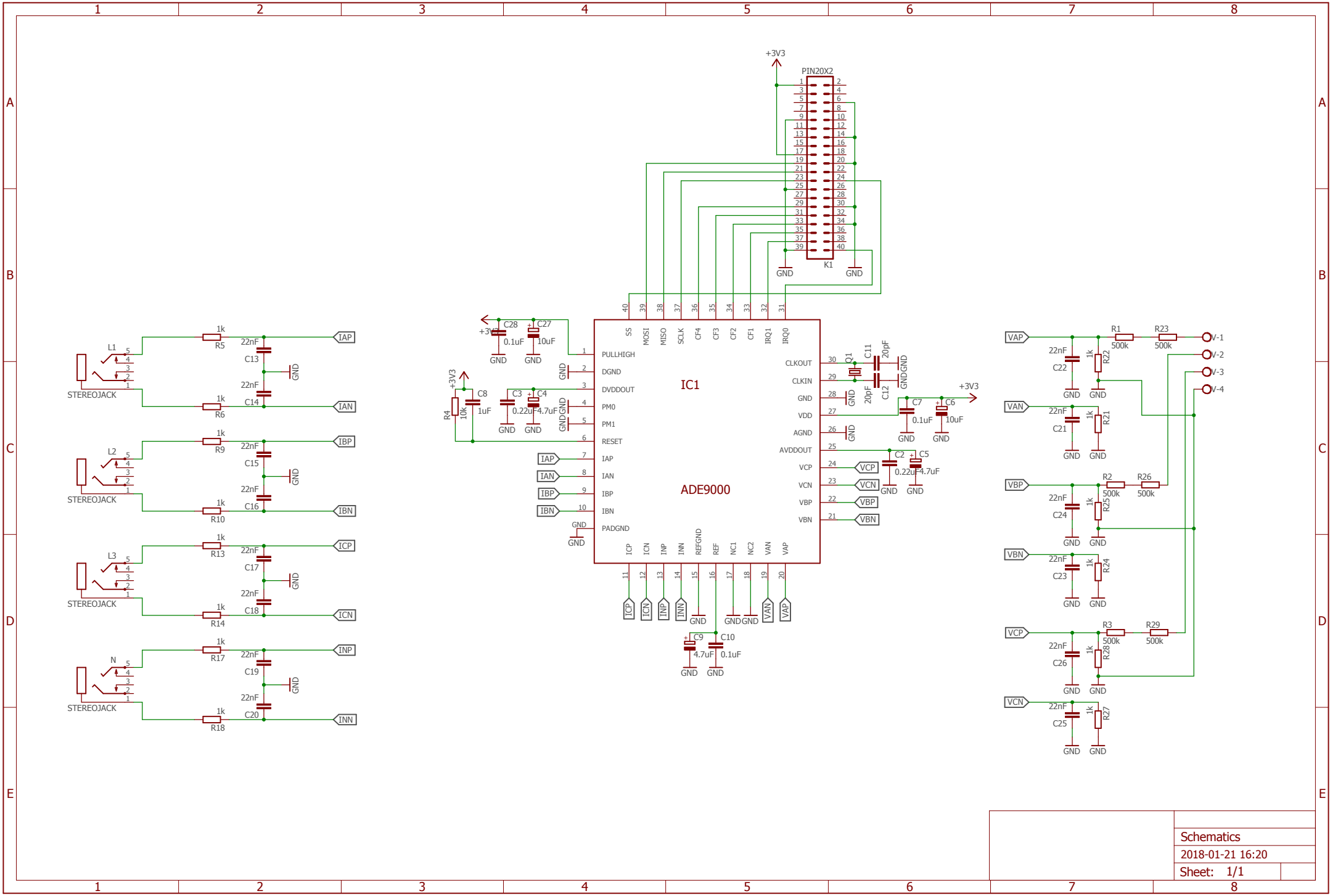
IC1
ADE9000
PIN20X2
K1
+3V3
GND
L1
L2
L3
N
STEREOJACK
IAP
IAN
IBP
IBN
ICP
ICN
INP
INN
VAP
VAN
VBP
VBN
VCP
VCN
V-1
V-2
V-3
V-4
Schematics
2018-01-21 16:20
Sheet: 1/1