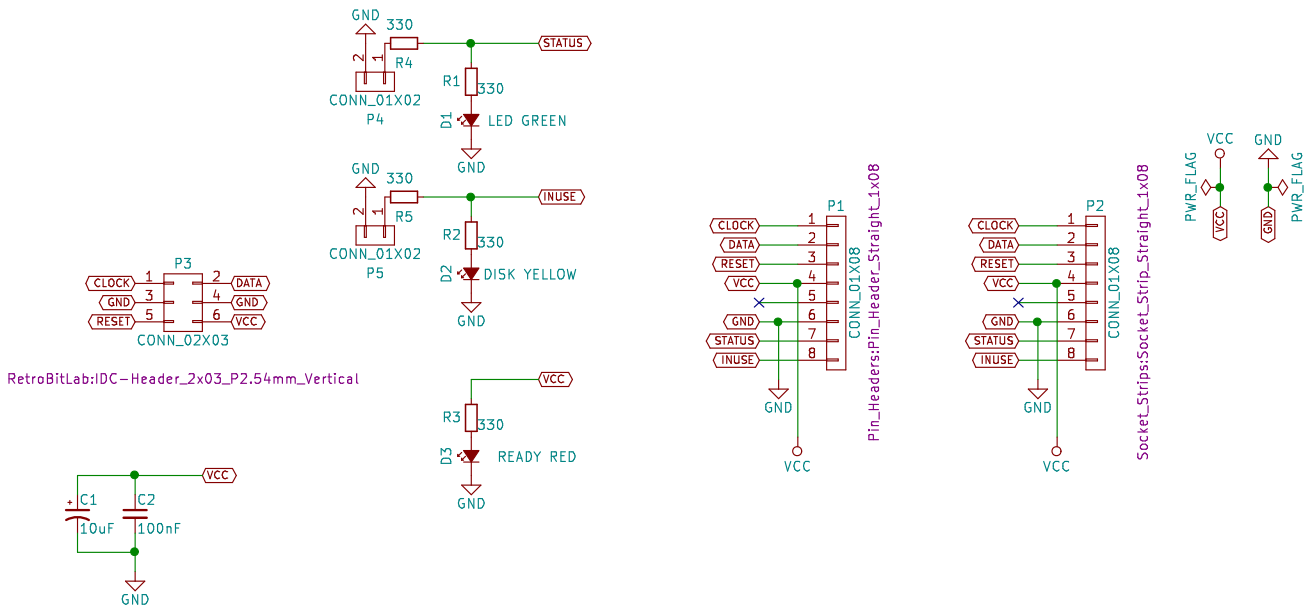

J13 Adapter on Amiga 500 Motherboard Lobster

Retrobit Lab

Sheet: /

File: A500MPU-Adapter.sch

Title: Amiga 500 MPU Adapter

Size: A4	Date: 2018-12-23	**Rev: 1.0**
KiCad E.D.A. kicad 4.0.2+dfsg1-stable		Id: 1/1