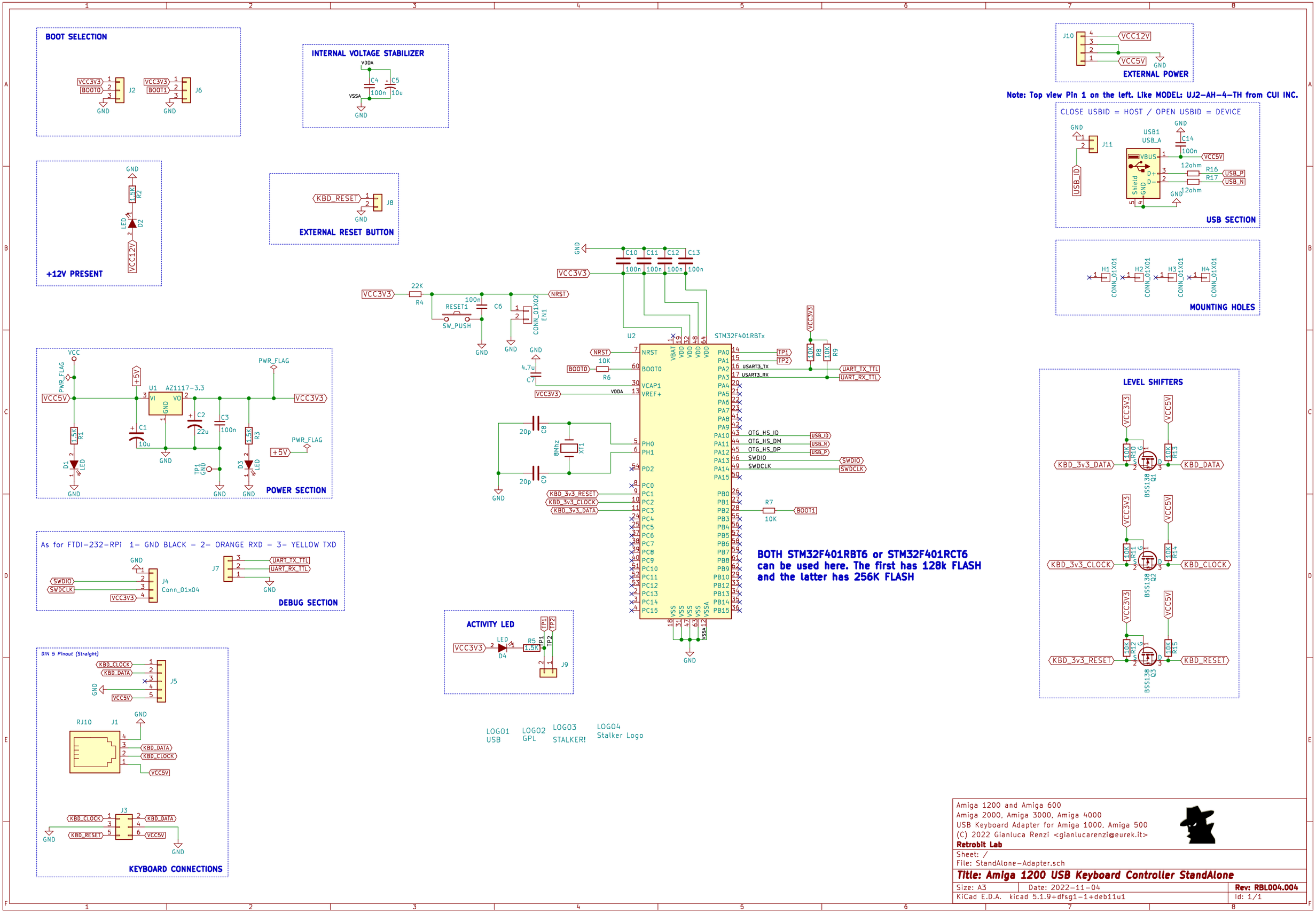
BOOT SELECTION
INTERNAL VOLTAGE STABILIZER
EXTERNAL POWER
Note: Top view Pin 1 on the left. Like MODEL: UJ2-AH-4-TH from CUI INC.
CLOSE USBID = HOST / OPEN USBID = DEVICE
USB SECTION
+12V PRESENT
EXTERNAL RESET BUTTON
MOUNTING HOLES
LEVEL SHIFTERS
POWER SECTION
STM32F401RBTx
BOTH STM32F401RBT6 or STM32F401RCT6 can be used here. The first has 128k FLASH and the latter has 256K FLASH
As for FTDI-232-RPi 1- GND BLACK - 2- ORANGE RXD - 3- YELLOW TXD
DEBUG SECTION
ACTIVITY LED
DIN 5 Pinout (Straight)
KEYBOARD CONNECTIONS
LOGO01 USB
LOGO02 GPL
LOGO03 STALKER!
LOGO04 Stalker Logo
Amiga 1200 and Amiga 600
Amiga 2000, Amiga 3000, Amiga 4000
USB Keyboard Adapter for Amiga 1000, Amiga 500
(C) 2022 Gianluca Renzi <gianlucarenzi@eurek.it>
Retrobit Lab
Sheet: /
File: StandAlone-Adapter.sch
Title: Amiga 1200 USB Keyboard Controller StandAlone
Size: A3
Date: 2022-11-04
Rev: RBL004.004
KiCad E.D.A. kicad 5.1.9+dfsg1-1+deb11u1
Id: 1/1