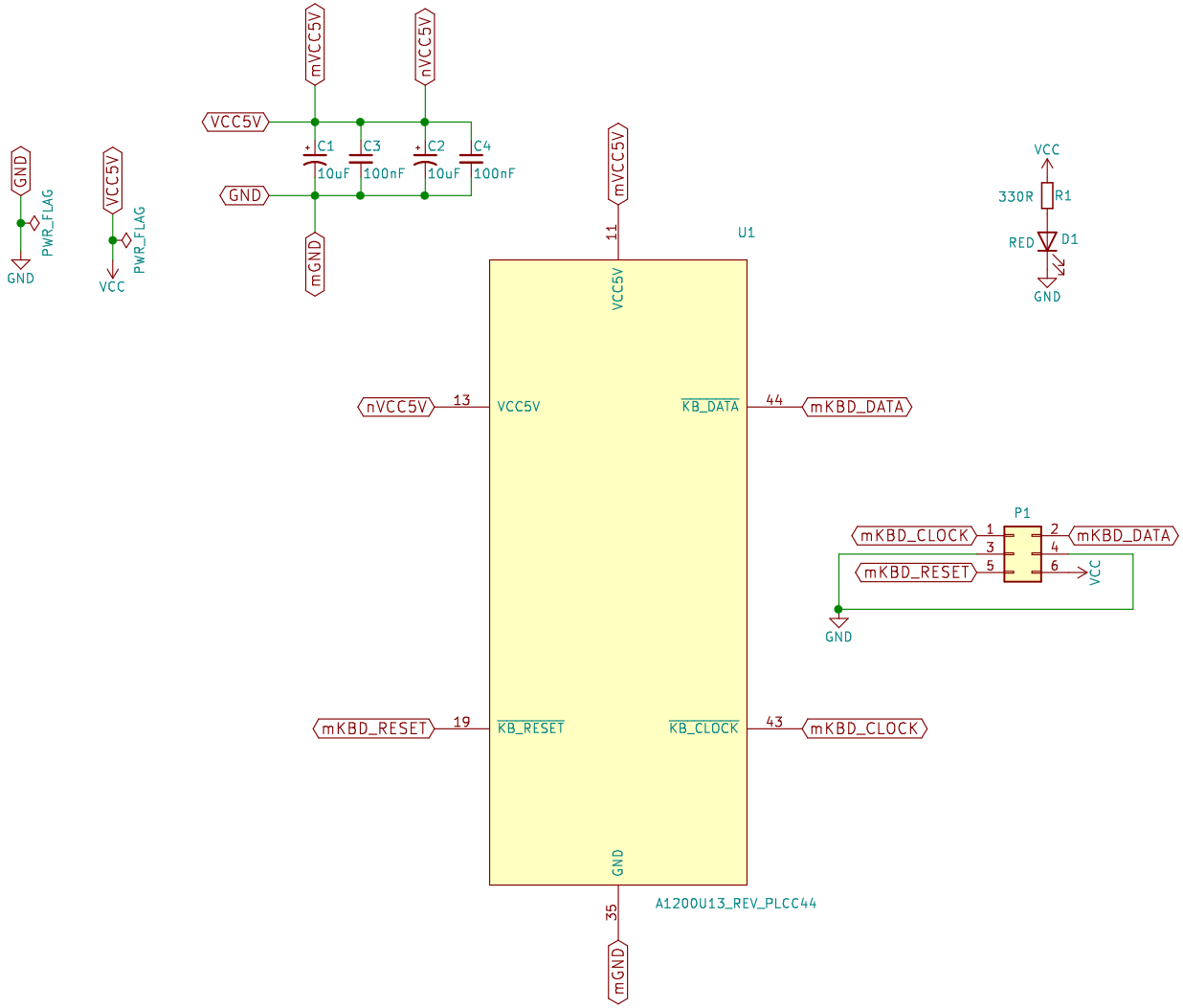


From Kicad 4 to Kicad 5
Amiga1200 Internal Connector for STALKER
**RetroBit Lab**

Sheet: /
File: A1200MPU-Adapter.sch

**Title: Amiga1200 U13 MPU Adapter**

| | | |
|---|---|---|
| Size: A4 | Date: 2022-11-10 | **Rev: 2.0** |
| KiCad E.D.A. kicad 5.1.9+dfsg1-1+deb11u1 | | Id: 1/1 |