Today

Distributed Objects (Lesson 6)

- ✓ Spring Kernel
- ✓ Java RMI + EJB ⇐

Wednesday

Distributed Subsystems (Lesson 7)

* Global memory system
  (Please see video)

User's View of Enterprises

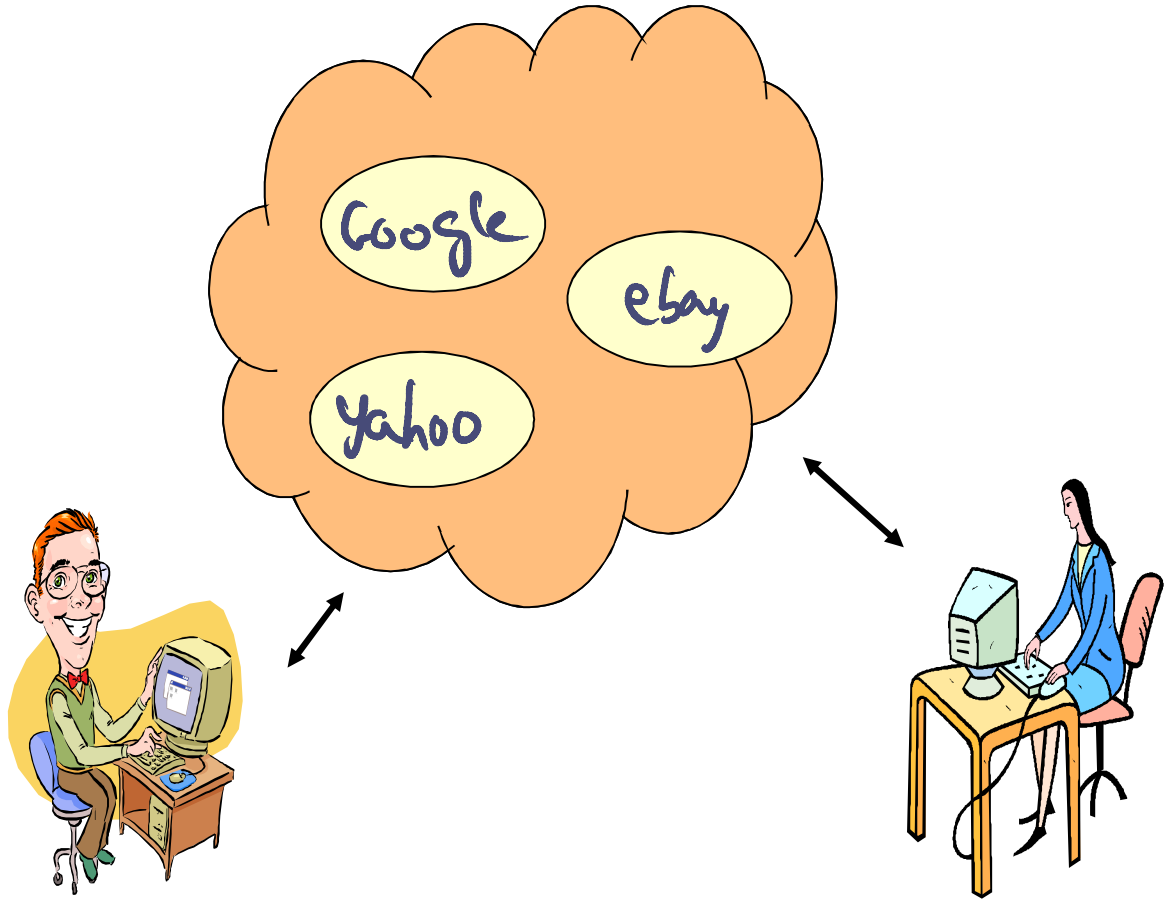

Intra Enterprise View

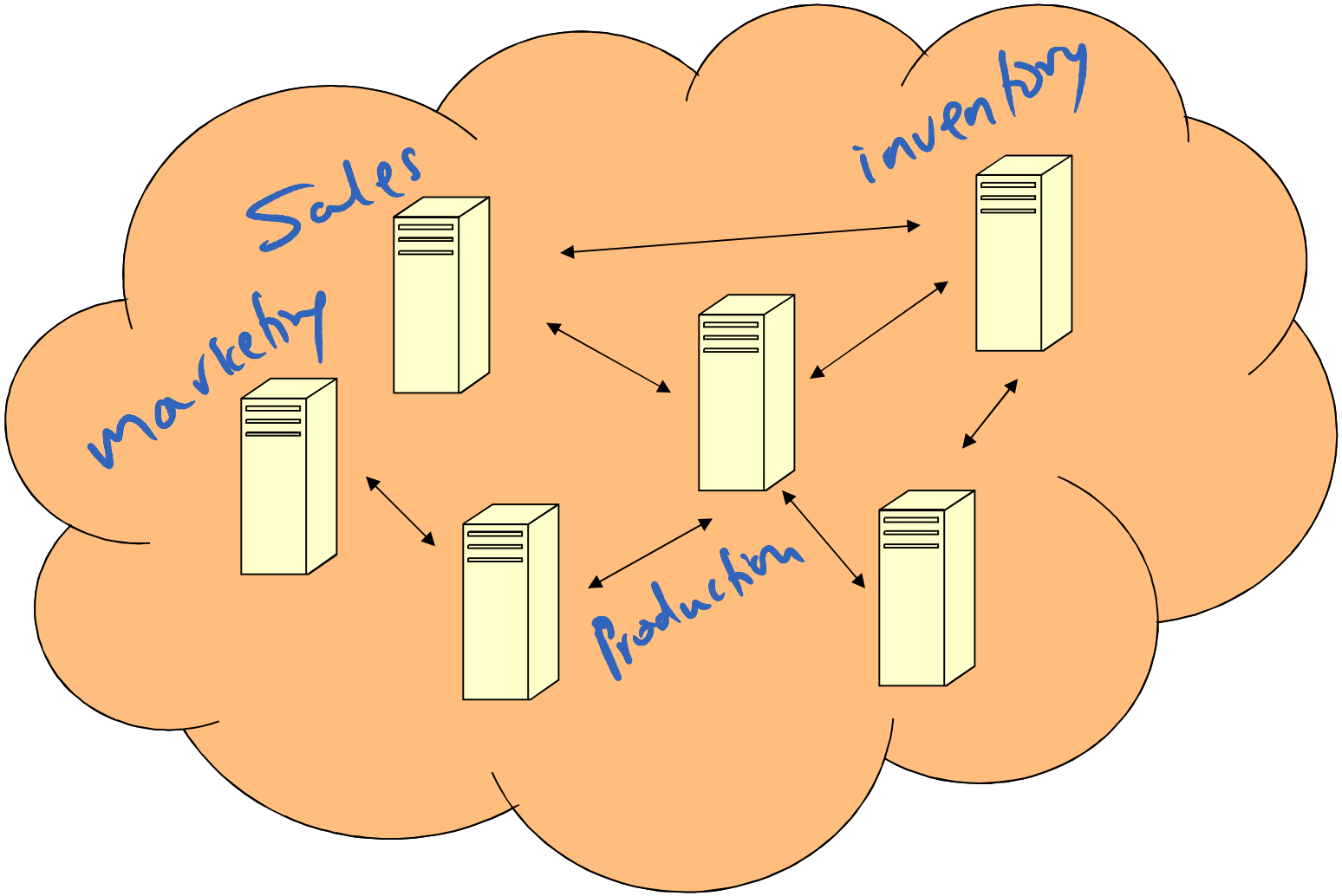

Inter Enterprise View

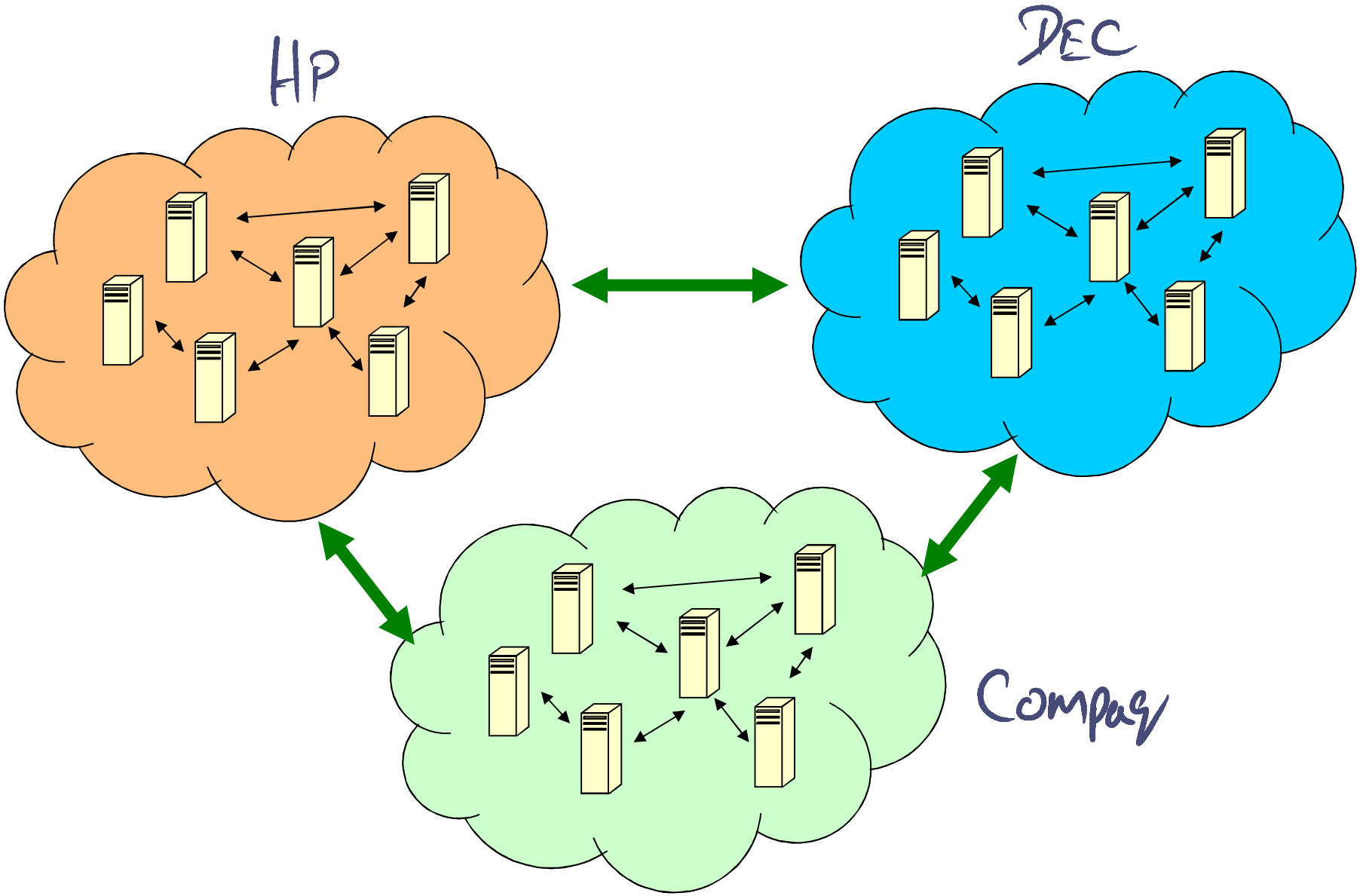

An example

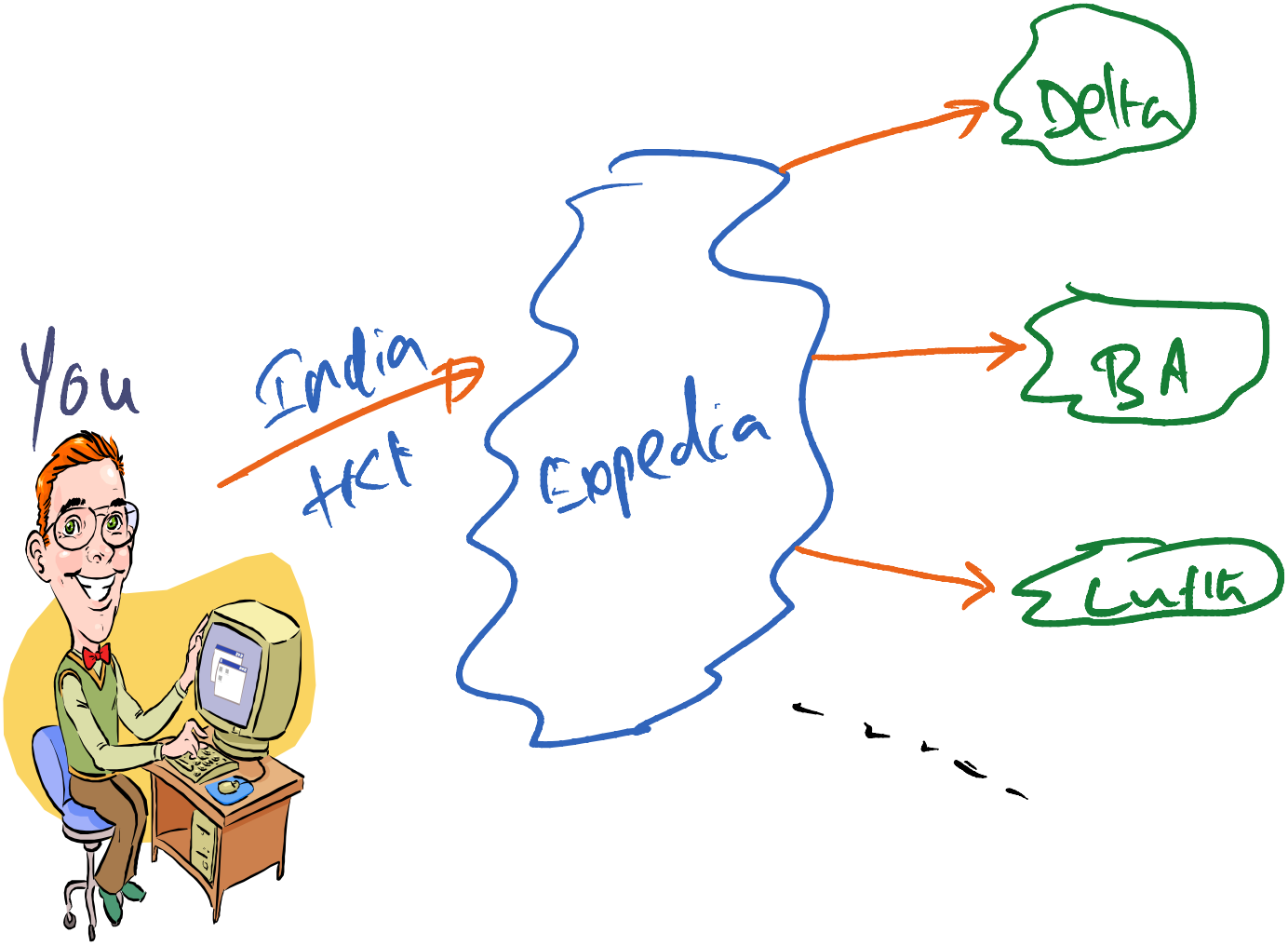

An example

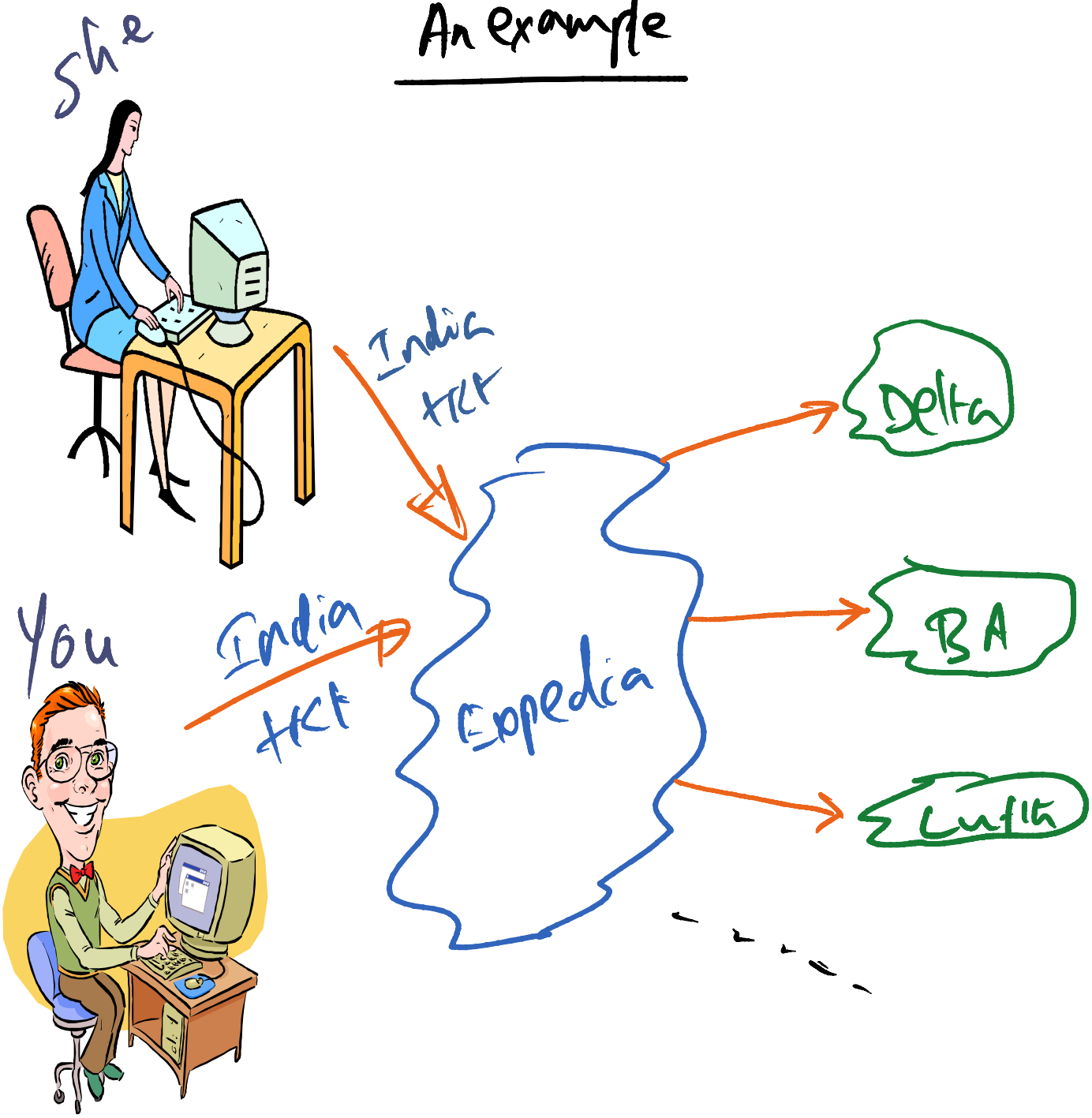

An example

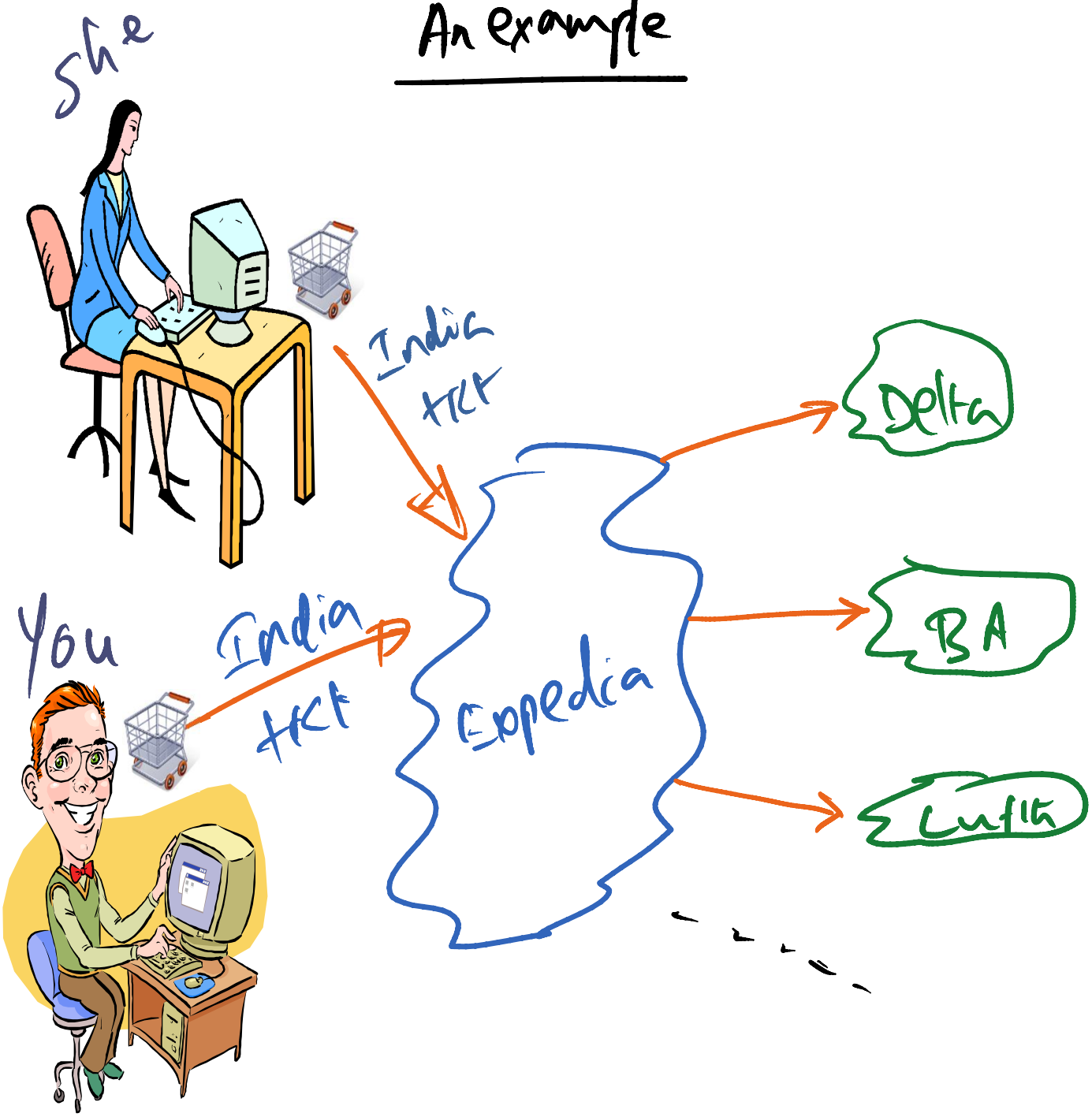

N-tier Applications

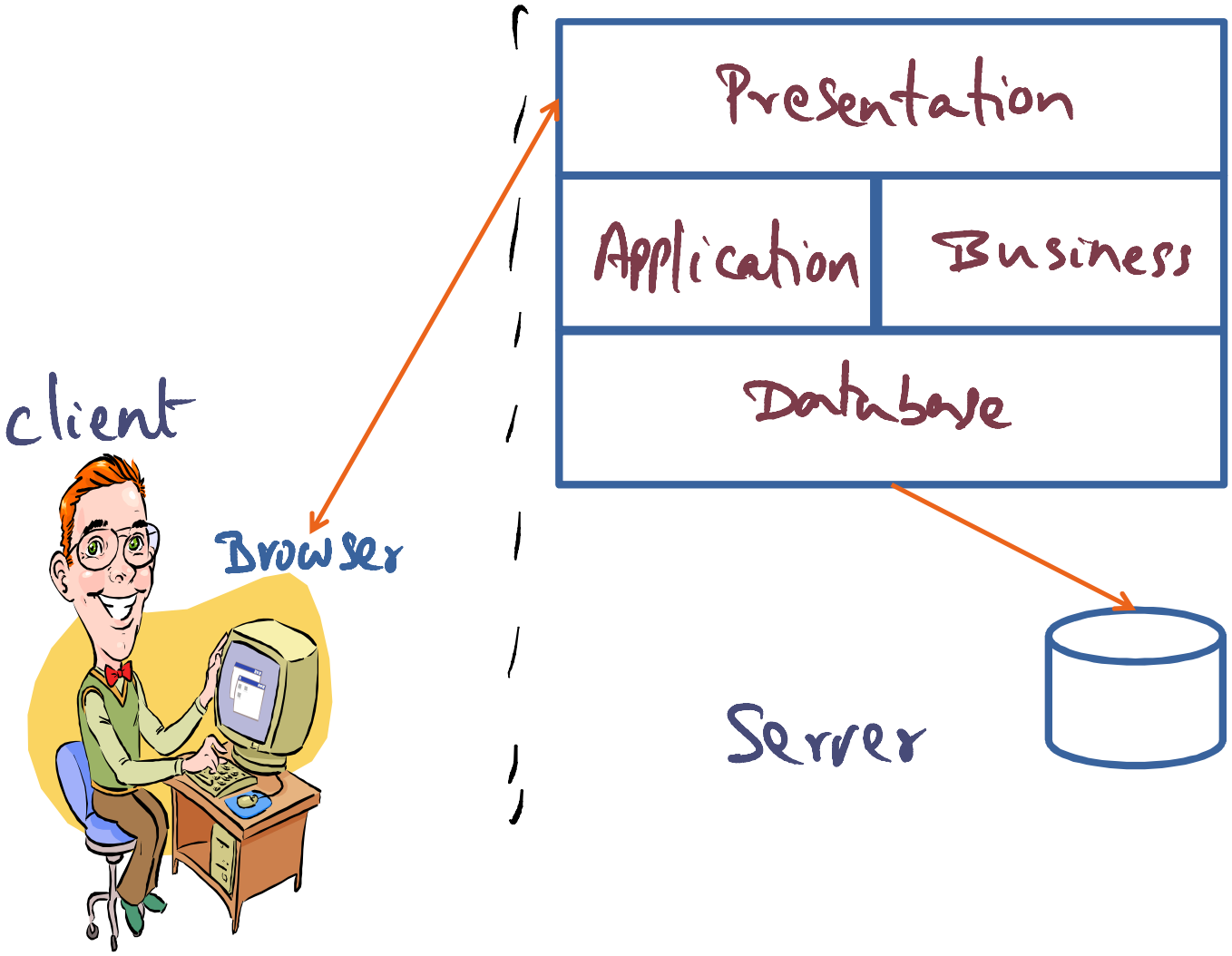

* persistence
* Transactions
* Caching
* clustering
* security

N-tier Applications

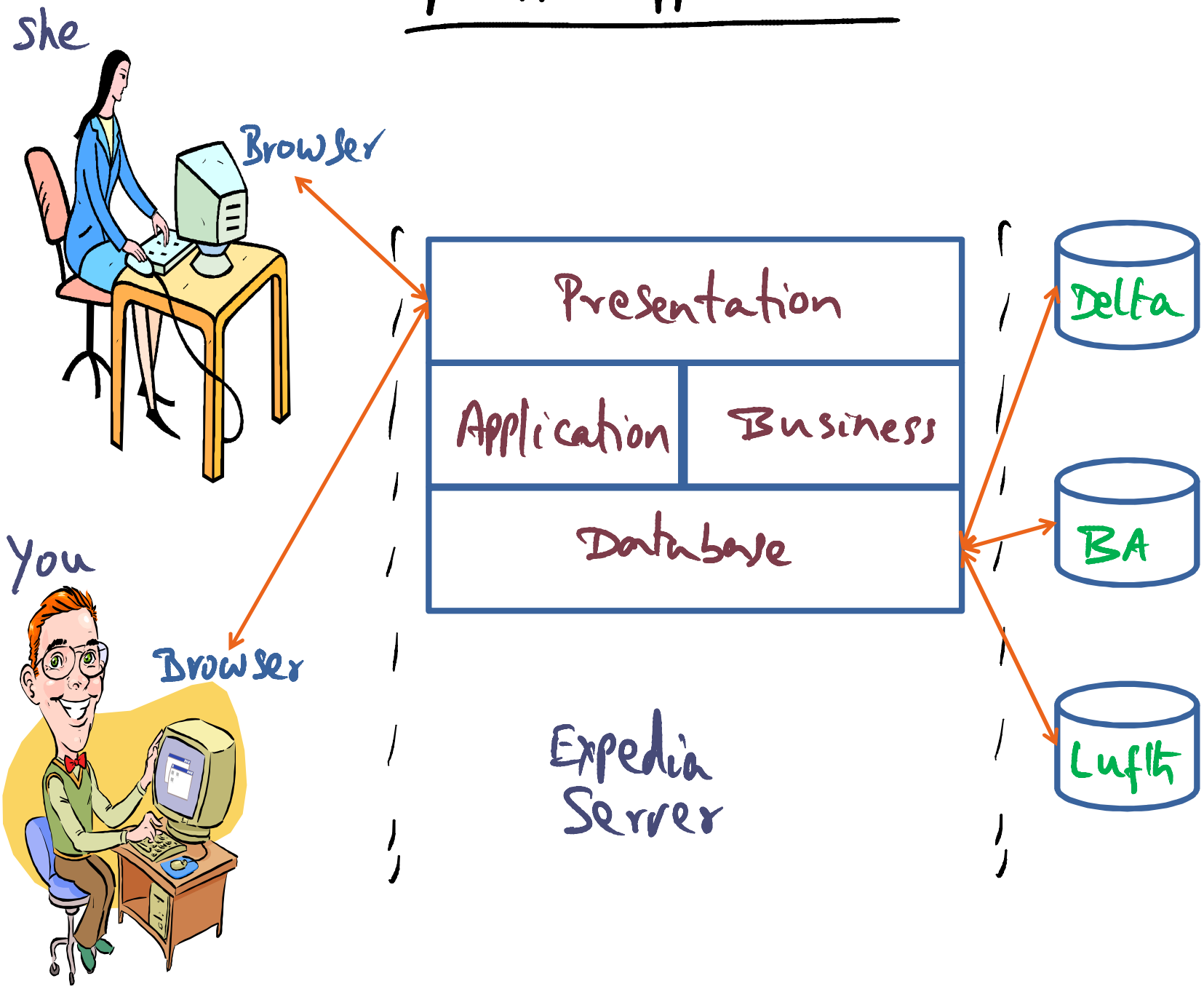

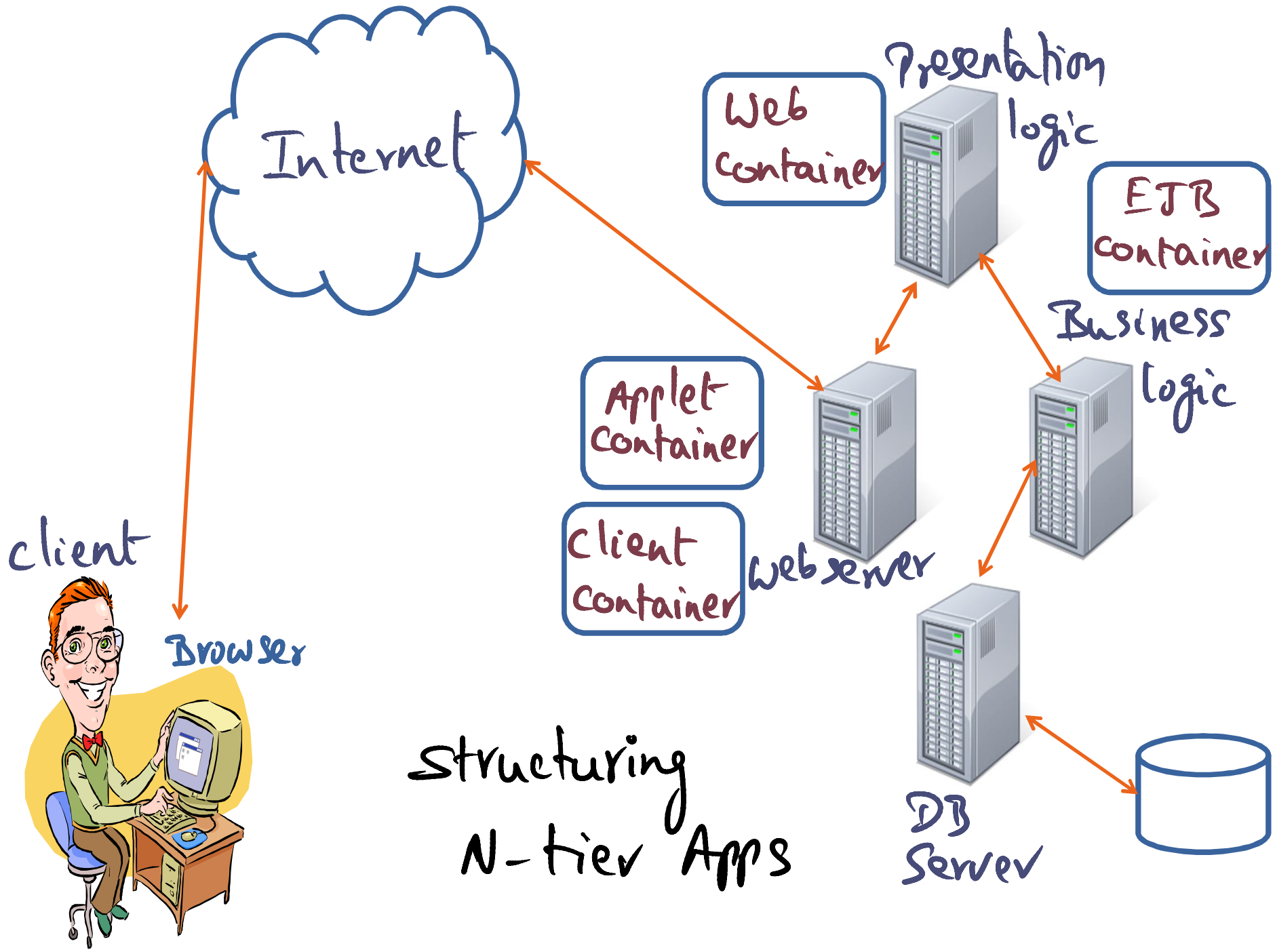

Structuring N-tier Apps

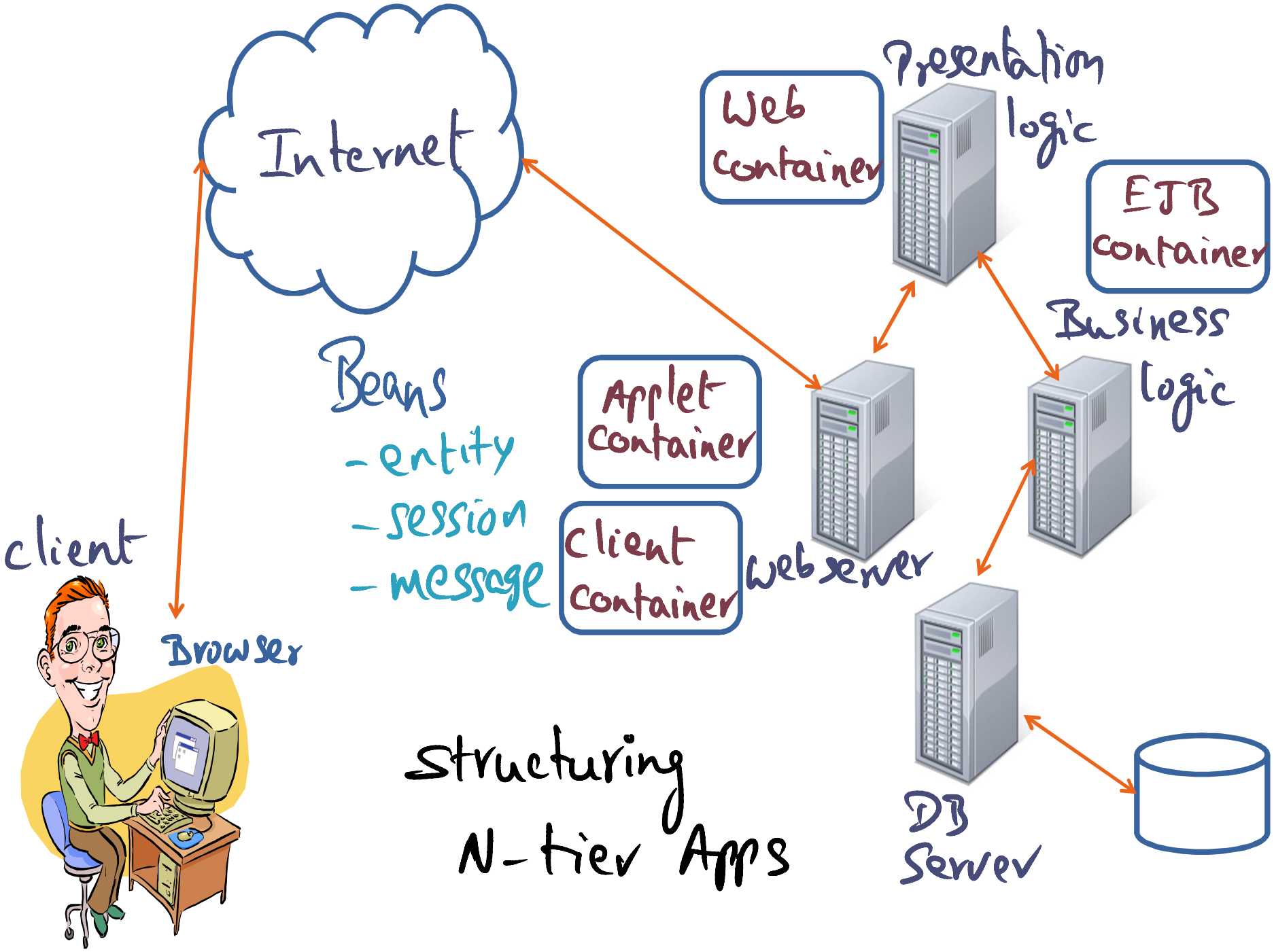

Structuring N-tier Apps

Design Alternative 1 : Coarse grain session Beans

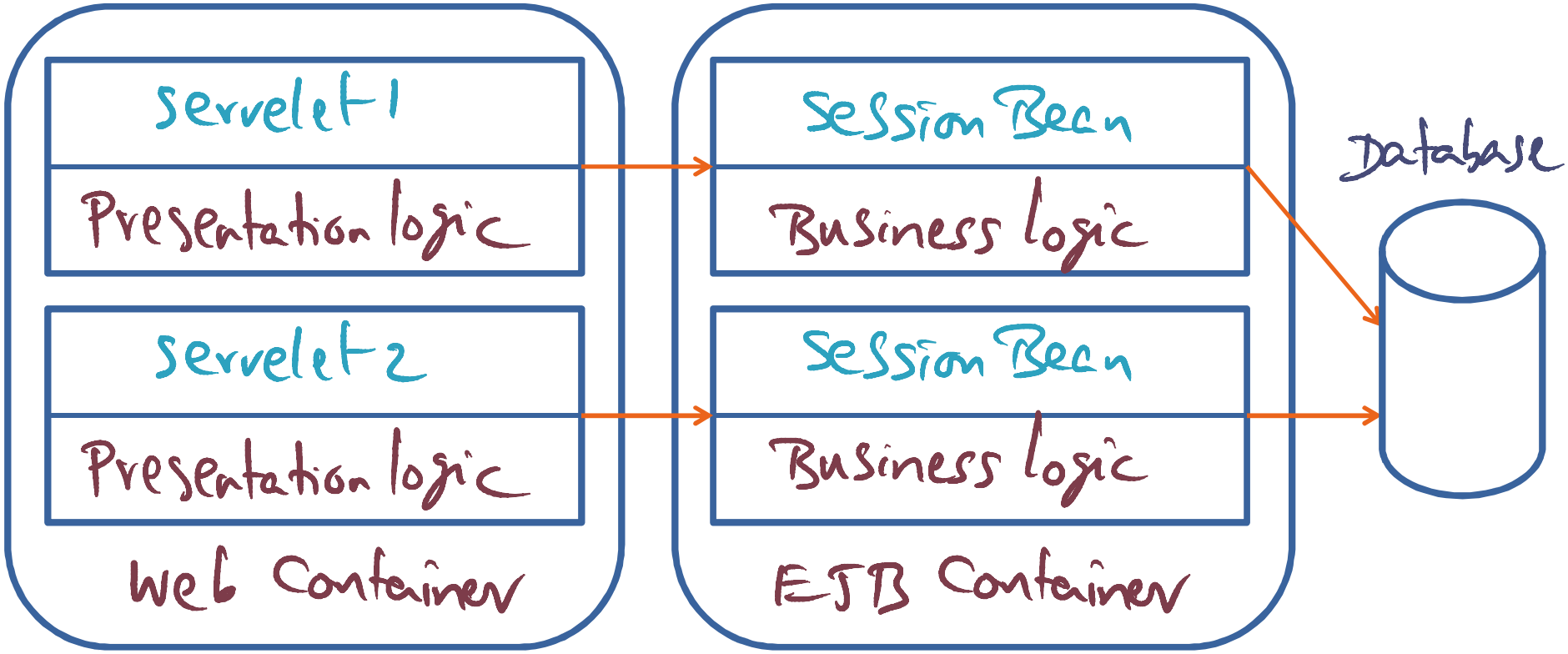

Pros
- minimal container services
- Business logic not exposed

Cons
- app structure akin to "monolithic kernel"

Design Alternative 2: Data Access Object

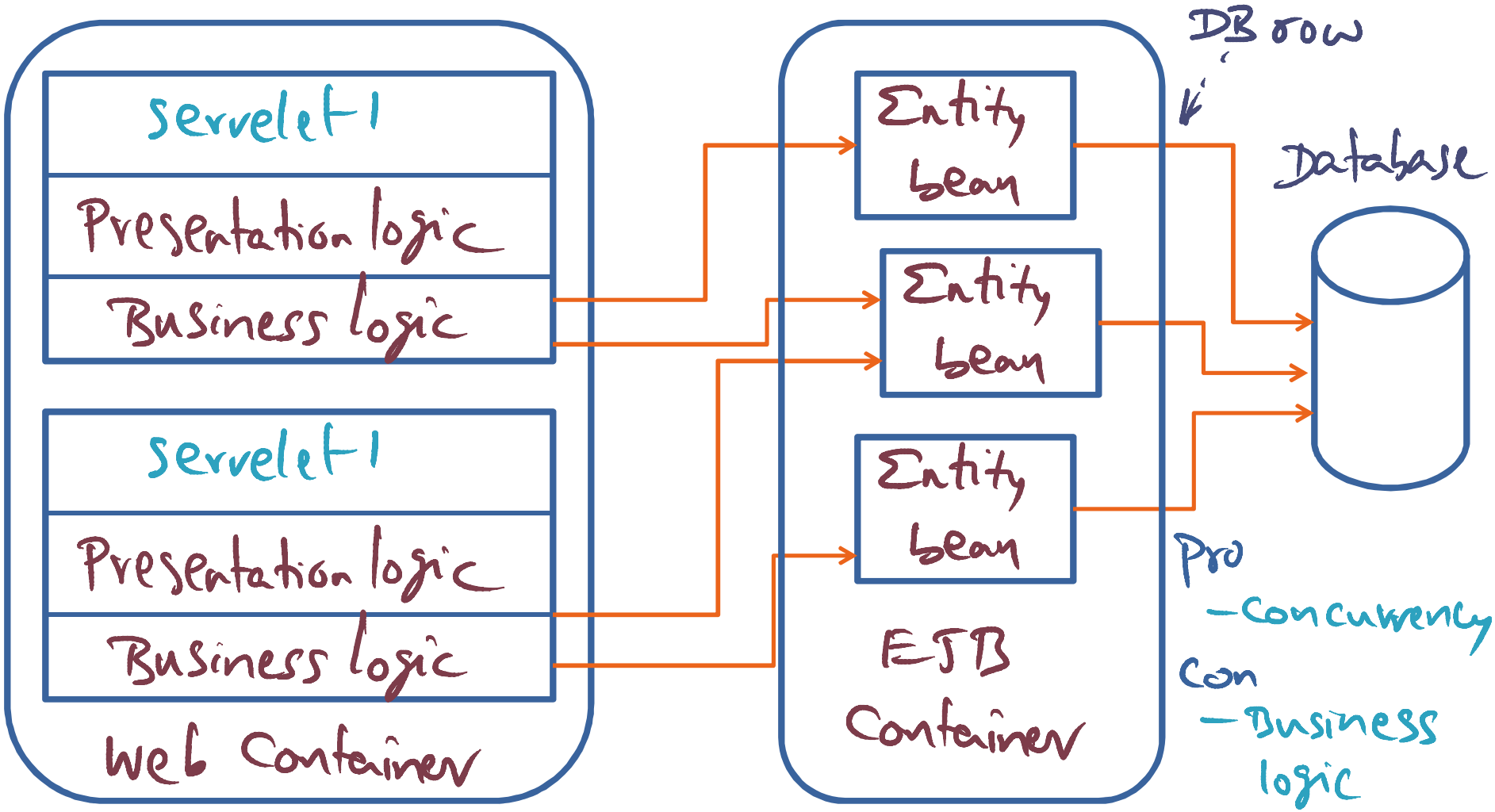

Pro
- Concurrency

Con
- Business logic exposed

DAO using Entity bean → CMP
→ BMP

Design Alternative 3 : Session bean with entity bean

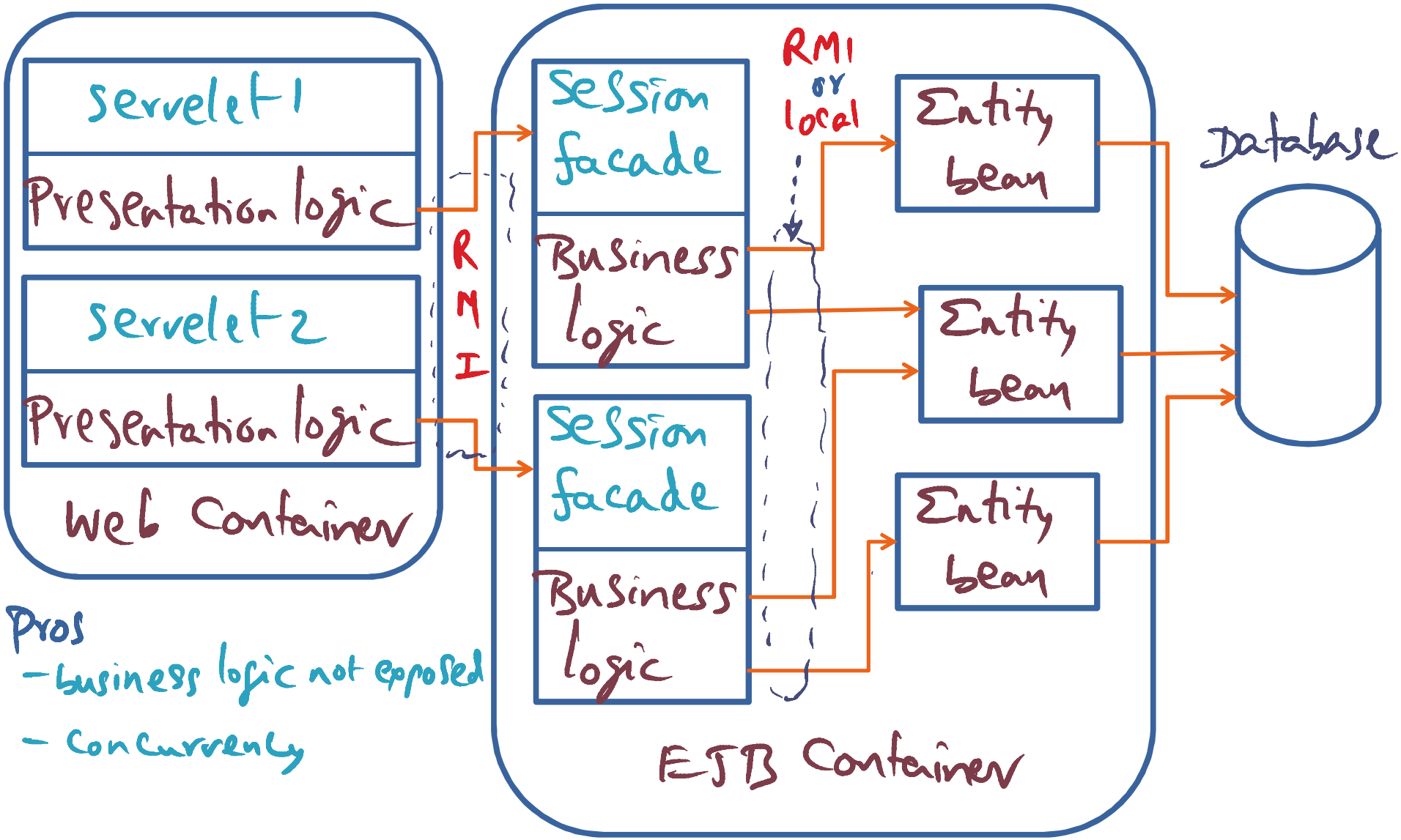

Pros
- business logic not exposed
- Concurrency