Chassis Design for Formula Student Acceleration Event

Toby McConnell

April 5, 2026

Chapter 1

Chassis Design

1.1 Introduction and Design Philosophy

The objective of this project is to design a Formula Student vehicle optimised specifically for the sprint event. Unlike a conventional Formula Student car which must balance acceleration, endurance, and handling performance, this design prioritises maximum straight-line acceleration over a short distance. As a result, the chassis design philosophy differs from traditional Formula Student vehicles. Rather than optimising for cornering stiffness and lateral load cases, the design focuses on structural efficiency, weight reduction, manufacturability, and resistance to high longitudinal loads generated by rapid acceleration.

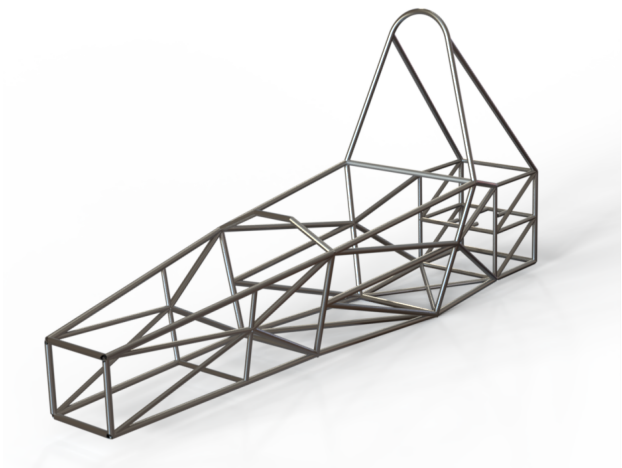

Figure 1.1: Chassis Render

The primary performance objective is therefore to create a cost effective structure that minimises total vehicle mass while safely handling high acceleration and high drivetrain torque while also protecting the driver during potential crash scenarios in the most structurally efficient way.

1.2 Design Requirements and Constraints

The chassis design must satisfy a range of performance targets, structural requirements, and regulatory constraints. These factors collectively define the design space within which the final architecture must be developed.

Metric	Target	Design Rationale
Total Vehicle Mass	< 220 kg	Simulations indicate optimal mass near 170 kg; however perfomance only get notably worse at total masses over 220 kg
Chassis Mass	< 48 kg	Supercapacitors: 38 kg; Front wheels: 2×4.6 kg; Rear wheels: 2×5.0 kg; Motor: 28.2 kg; Inverter: 8.5 kg; Driver: 68 kg, Coolant Oil + Tank: 1kg, Suspension + Bodywork: ∼10 kg. For Chassis: $225 - \sum = 48$.
Horizontal CoM	65–70% rear	With our Rear-Wheel drive car we want as much as weight as possible over the rear axle to maximise traction and prevent wheel spin but also want enough weight over the front to prevent wheelies and maintaining stability. See Section 1.5.2.
Vertical CoM	Minimise	Lower centre of mass improves stability and reduces pitch during acceleration.
Structural Durability	No yielding	Chassis must transmit motor torque and longitudinal acceleration loads without permanent deformation and protect driver in crash scenarios.
Stiffness Priority	Longitudinal	Straight-line optimisation prioritises resistance to longitudinal loads, motor reaction torque and impacts over torsional stiffness.
Chassis Price	Minimise (ideally $<$ £1000)	Keep price as low as possible to maximise second/£

1.3 Chassis Type Selection

The first major structural design decision was the selection of the overall chassis architecture.

- **Spaceframe options:**
  - A spaceframe is a structure made from interconnected tubes,the default construction for FS is mild steel or alloy tubing.
  - Approved “Alternative Materials” as per T3.3 were considered - normally, aluminium
- **Alternatives to spaceframe:**
  - The most common approved “Composite Structure” as per T3.4 is a carbon fibre monocoque.
  - It is possible to adopt a hybrid structure with different chassis sections using different concepts.

Each concept offers distinct advantages and to objectively evaluate these alternatives, a weighted Pugh decision matrix was used, allowing each concept to be assessed against criteria relevant to the sprint-optimised design objectives.

Criteria	Weight	Steel Spaceframe	Al Spaceframe	Carbon Fibre	Hybrid
Material Cost	3	1	0	-2	-1
Mass Potential	2	-1	1	2	1
Strength	2	1	-1	2	0
Stiffness	2	0	-1	2	1
Availability	0.5	2	1	-1	-1
Durability	0.5	1	1	-1	0
Manufacturing Simplicity	1	1	0	-1	-2
Manufacturing Cost	1	1	1	-1	-1
TOTAL		6.5	0	3	-2.5

Figure 1.2: Architecture Pugh Matrix

The weighting is heavily biased toward Cost and Manufacturing (65 % total). Figure 1.2 illustrates the reasoning by the low weight rating for mass potential in the pugh matrix due to its minimal impact on perfomance within the range of different chassis masses.

Chassis Type	**Weight Est. (kg)**	**Price Est. (£)**	**Finish Time Est. (s)**	**£ per s lost**
Heavy Steel Spaceframe (Baseline)	50	1000	3.60	–
Light Carbon Monocoque	20	2500	3.56	37500

Table 1.1: Cost-per-second of improvement for Lighter Chassis Option

Strength was weighted highly to ensure driver safety, perfomance in crashes, and compliance with regulations. Stiffness is typically prioritised in circuit-focused vehicles to improve cornering performance; however, this is less critical for a drag-optimised design. It was still assigned a rating of 2, as sufficient stiffness is required to ensure drivetrain loads are efficiently transferred to the wheels rather than being absorbed through chassis deflection. Factors like Material Cost, Availability, and Manufacturing Simplicity ensure focus on a practical, cost-efficient design. The Steel Spaceframe scored highest in the Pugh Matrix and was the chosen option because it offers the most balanced approach: trading the marginal performance gains of composites for its reliability, simplicity and price.

1.4 Material Selection

Having chosen a steel spaceframe as our design we must now select the exact steel alloy we will be using. These were the 4 options considered, based on their prevalence in racing chassis:

- **Mild Steel (CDS):** A low-carbon steel with good ductility, weldability, and availability.
- **AISI 1020 Cold Drawn Steel:** A medium-low carbon steel with improved strength and dimensional consistency compared to standard mild steel due to the cold-drawing process.

- **4130 Chromoly:** A low-alloy steel containing chromium and molybdenum as strengthening agents, traditionally used in aviation and professional motorsports.
- **Docol R8:** A modern dual-phase advanced high-strength steel (AHSS) engineered to provide a consistent grain structure, high strength, and improved energy absorption characteristics.

1.4.1 Mass, Cost, and Manufacturing Analysis

Higher yield strength steels offer mass reduction potential because thinner tubing can be used while still meeting Formula Student bending and safety requirements. However, this benefit is limited since all steels share a similar Young's Modulus, meaning thinner tubes are inherently less stiff. The Formula Student equivalency rules further reduce the advantage by requiring larger diameters to restore bending stiffness, offsetting much of the initial mass saving.
Using a preliminary CAD model for the spaceframe built on SolidWorks using weldments software and custom material and tube packages, the estimates in the table below were gathered:

Material	Est. Chassis Mass (kg)	Raw Material Cost (£)	Strength (MPa)	Performance Est. (s)	Mfg. Complexity
Mild Steel (CDS)	40	480	280	3.59	Low (MIG)
AISI 1020 CD	40	550	420	3.59	Low (MIG)
4130 Chromoly	31	1,050	560	3.57	High (TIG + HAZ Control)
Docol R8	30	1,200	800	3.57	Moderate (TIG/MIG)

Table 1.2: Comparison of candidate chassis materials

The manufacturing complexity scores are due to the fact that 4130 chromoly requires careful control of welding heat input and cooling rates to avoid embrittlement in the heat-affected zone, typically necessitating TIG welding and greater operator skill. Docol R8, while less sensitive to heat-affected zone effects, has very high strength and hardness which increases tool wear during cutting, drilling, and notching.

1.4.2 Pugh Matrix and Final Material Selection

To finalize our selection we use the same pugh matrix as before (with stiffness removed as it is unifrom across all steel alloys).
Additionally, the achievable strength is often limited by the weld and heat-affected zone, which typically has lower or similar strength regardless of the parent material, reducing the benefit of very high-strength steels. We have opted for AISI 1020 CD because it provides a 350–380 MPa yield strength (40% higher than standard mild steel) while remaining cheap and easy to MIG weld and again sacrifices marginal performance improvements to avoid the high costs and complexities of the

Criteria	Weight	Mild Steel	AISI 1020 CD	4130 Chromoly	Docol R8
Material Cost	3	1	0	-1	-2
Mass Potential	2	-2	-1	2	2
Strength	2	-2	0	1	2
Availability	0.5	2	1	-1	-2
Durability	0.5	-1	0	-1	1
Manufacturing Simplicity	1	1	1	-2	-1
Manufacturing Cost	1	1	1	-1	-1
TOTAL		-2.5	0.5	-1	-0.5

Figure 1.3: Steel Pugh Matrix

higher-end alloys.

See the different tube diameters used below

Table 1.3: Tube diameter strategy

Structure	**Tube Size (mm)**	**Rule / Requirement**	**Application Rationale**
Main Roll Hoop	25×2.5	Primary structures must meet baseline roll-over strength requirements.	Thickest wall section used to maximise safety factor during rollover events and provide highest bending resistance.
Front Hoop & Side Impact	25×2.0	Cockpit protection structures subject to impact loading requirements.	Protects driver's cockpit; AISI 1020 CD provides $\sim$350 MPa yield capacity per tube. Members primarily experience compression during collisions, so 2 mm wall thickness reduces buckling risk.
Secondary Bracing	20×2.0	No direct regulatory requirement for non-impact structural members.	Used for non-critical bracing to reduce mass while maintaining adequate stiffness. See 1.5

1.5 Chassis Architecture

After selecting a steel spaceframe architecture, the design process focused on optimising packaging to create a compact, lightweight chassis built around the driver and components.

The cockpit was designed first, positioning the front bulkhead, side impact structure, and roll hoops around the "Percy" driver template. The front and main roll hoops were then integrated to provide rollover protection and form key structural nodes. Once the driver envelope was defined, the powertrain components — supercapacitors, inverter, and motor — were packaged in the rear of the chassis (fig. 1.4a). Locating these components close together reduced cabling length, helped concentrate the centre of mass near the rear axle and allowed one simple firewall to be placed directly behind the driver to meet FS regulations. The rear was also designed with a large enough opening below the supercacpictors with removable support bars so it is easy to take in and out for saftey checks and maintenance. This layout was enabled by the rear-wheel-drive configuration. The motor mount was then integrated directly into triangulated members to ensure torque loads are effi-

ciently transferred into the chassis without introducing excessive bending stresses (Verified in Section 1.7.2). The mounting for the rest of the compmenets is more trivial with base plates and clamps and were deemed unneccsary to fully design as they had little affcet on chassis perfomance, however their exact mount points in the chassis were identified and used for simulating the effect of their mass in section 1.7.1

Once the frame geometry was established the secondary tubes were identified and converted from 25x2mm to 20x2mm leading to a total 2kg mass reduction (fig. 1.4b).

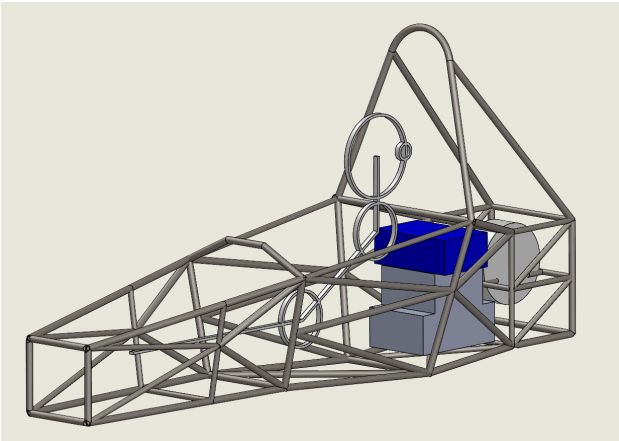

(a) Chassis with components

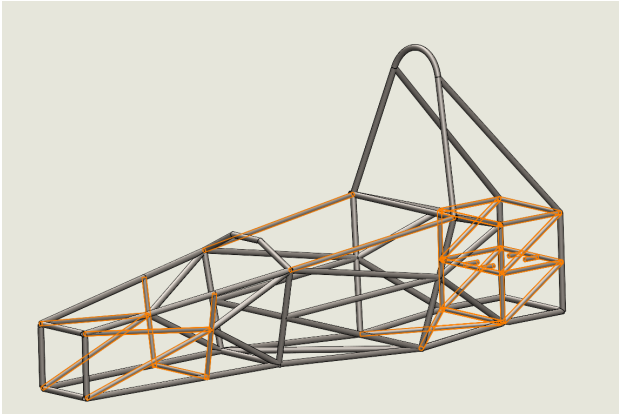

(b) Bars Replaced with 20x2mm tubes

1.5.1 Impact Attenuator

The Formula Student standard impact attenuator (IA) was selected because it offers excellent energy absorption and proven reliability, enhancing driver safety with minimal weight penalty. Designing and verifying a custom IA would add significant cost, complexity, and testing requirements, while the relatively low risk of high-energy crashes in our sprint-focused chassis means that a standard, approved attenuator provides a safer and more efficient solution. Although using the standard IA results in a small points penalty, the benefits in reduced risk, cost, and development effort make a custom design unjustifiable.

1.5.2 Wheelbase

A crucial aim of the chassis deisgn is to ensure our car avoids wheeling dring the high acceleration of the sprint event. This is because lifting the front wheels reduces steering control and wastes energy raising the vehicle's centre of mass instead of accelerating forward. Using the CAD model: including chassis, driver and all components for the CoM estimates, the wheelie limit can be estimated by balancing moments about the rear axle. A wheelie occurs when the front axle load becomes zero, which leads to the relationship:

$$a = g \times \frac{d_{\text{rear}}}{h} \tag{1.5.1}$$

where a is vehicle acceleration, d_{rear} is the horizontal distance between the centre of mass and the rear axle, and h is the centre of mass height.

Rearranging the equation allows the minimum distance from the centre of mass to the rear axle to be calculated for the vehicle's predicted peak acceleration of 1.33 g. With an estimated centre of mass height of 325 mm based on first iteration in CAD, the required distance becomes:

$$d_{\text{rear}} = \frac{a}{g} \times h = 1.33 \times 0.325\,\text{m} \approx 0.432\,\text{m} \tag{1.5.2}$$

Therefore, the centre of mass must be located at least 432 mm forward of the rear axle to prevent front wheel lift under maximum acceleration.

1.5.3 Suspension Hardpoints

A 200 ± 50 mm by 450 ± 100 mm template provided by the wheel team was used to guide the geomeotry of the chassis, 4 triangulated nodes were ensured to be at each of the corners of this area for placement of the suspension mounting points. The roll hoops are primarily designed as safety structures, and therefore the main roll hoop was not used for rear suspension mounting to avoid introducing operational loads that could compromise rollover protection. Instead, the rear of the chassis was extended behind the main roll hoop to provide suitable mounting locations for the rear suspension. Conversely, the front of the chassis was optimised to minimise structural mass. The front suspension mounting points were integrated into the front roll hoop structure, where loads can be effectively triangulated into the surrounding members, allowing the roll hoop to contribute structurally without compromising its safety function. This approach reduces the need for additional forward chassis members and lowers overall mass. Both decisions offer the added benefit of shifting the centre of mass slightly rearward, closer to our target while within wheelie limits. Space was also reserved at the front of the chassis to accommodate the sway bar.

Parameter	**Value**
Wheelbase	1573 mm
Centre of Mass Height	325 mm
CoM Distance Ahead of Rear Axle	481 mm
Wheelie Safety Factor (vs. max launch)	< 0.9
Front Weight Distribution	30.5 %
Rear Weight Distribution	69.5 %

Table 1.4: Final chassis layout and mass distribution summary

1.6 Manufacturing and Structural Integrity Report

When constructing the chassis the strength of the welds is critical. The principle aim for the analysis in this section is to ensure that during chassis failure the tube reaches yield before the weld fails. Yielding of the tube is preferred because plastic deformation of the parent material absorbs a large amount of energy and allows loads to redistribute through the spaceframe, whereas weld failure is typically more brittle and can cause a sudden loss of load path at a joint, potentially leading to local separation of members and intrusion into the driver survival space, which is more dangerous in a chassis failure scenario.

1.6.1 Tube and Weld Capacity Calculation

Tube Properties

Parameter	Value
Yield Strength, σ_y	350 MPa
Ultimate Strength, σ_u	420 MPa
Outer Diameter, D	25 mm
Wall Thickness, t	2 mm
Inner Diameter, d	21 mm

Tube Section Properties

$$A = \frac{\pi}{4}(D^2 - d^2) = \frac{\pi}{4}(25^2 - 21^2) = 144.5 \text{ mm}^2$$
$$Z = \frac{\pi(D^4 - d^4)}{32D} = \frac{\pi(25^4 - 21^4)}{32 \times 25} = 763.5 \text{ mm}^3$$

Tube Capacity

$$F_{\text{tube}} = A\sigma_y = 50\,575 \text{ N } (50.6 \text{ kN})$$

$$M_{\text{tube}} = Z\sigma_y = 267\,225 \text{ N·mm } (267.2 \text{ Nm})$$

Weld Properties

Parameter	Value
Fillet Size, w	3.5 mm
Effective Throat, t_e	2.47 mm
Allowable Shear, τ_{allow}	300 MPa

Weld Capacity

$$A_w = \pi D t_e = 194.0 \text{ mm}^2$$

$$Z_w = \pi r_{\text{mean}}^2 t_e = 1026.3 \text{ mm}^3$$

$$F_{\text{weld}} = A_w \tau_{\text{allow}} = 58\,200 \text{ N } (58.2 \text{ kN})$$

$$M_{\text{weld}} = Z_w \tau_{\text{allow}} = 307\,890 \text{ N·mm } (307.9 \text{ Nm})$$

Load Type	Tube Yield Capacity	Weld Capacity (3.5 mm)	Failure Sequence
Axial Force	50.6 kN	58.2 kN	Tube Fails First
Bending Moment	267.2 Nm	307.9 Nm	Tube Fails First

Table 1.5: Comparative safety margin between tube and weld capacities.

Having justified the safety of the welds, practical fabrication considerations were addressed to maximise the quality of the chassis construction. The design features a lot of multi-member nodes, up to five tubes intersect: this introduces geometric interference that restricts MIG torch access and increases the risk of poor penetration, therefore eccentricities or slight offsets between tubes are introduced to maintain weld accessibility. These nodes also act as large heat sinks, creating thermal distortion during cooling; this is mitigated through a balanced welding sequence applied in staggered increments to distribute heat evenly. A controlled bottom-up fabrication workflow is used, beginning with jigging the floor structure on a flat table with dummy suspension tabs to establish a rigid reference plane, followed by precision hole-saw notching and CAD generates templates for the complex joints, such as in the roll hoops , and finally full chassis tacking prior to final welding to verify squareness and maintain suspension hardpoint tolerances. See table 1.6 for the estimated total cost of this construction is included below.

Category	Item Description	Estimated Cost
Raw Material	30m of AISI 1020 CD Tubing	£550
Welding Gas	1x Large Bottle Argon/CO_2	£90
Filler Metal	5kg Spool ER70S-6 MIG Wire	£30
Consumables	Hole-saws, Flap discs, Sanding belts	£80
Jigging	MDF/Steel scrap, clamps, and fasteners	£70
Impact Attenuator	FSAE Standard Impact Attenuator	£113
TOTAL		**£833**

Table 1.6: Estimated fabrication cost breakdown for chassis.

1.7 Chassis Performance Verification with Finite Element Analysis

The final step in the verification was to simulation all use case scenarios for the chassis to verify and optimise its design. This was done by using Finite Element Analysis (FEA) in SolidWorks: FEA divides the chassis into a mesh of small elements and calculating stresses, deflections, and potential failure points for each of these elements we can accuratly predcit the overall behaviour under different load cases.
Each simulation was evaluated against three key failure modes to ensure the chassis design meets the required safety and performance standards:

- **Yielding:** The initial FEA assessment focused on identifying stresses exceeding the design limit of S.F. = 0.9 $\cdot\sigma_y$. Localised yielding in extreme crash scenarios was not considered critical, as limited plastic deformation is acceptable provided driver safety is maintained, and the low likelihood of such events justifies potential repair costs.

- **Buckling:** All simulations checked for excessive compressive loads in members, since buckling can occur below the material yield strength. This represents a mechanical instability rather than a material failure, meaning a member can suddenly lose load-carrying capacity without the material itself yielding, making it a more abrupt and dangerous failure mode.

- **Weld Stresses:** Weld stresses were monitored separately, with an allowable limit defined using a S.F. ~ 0.75 ut dependant on the complexity of the weld. As stated earlier, weld failure is particularly dangerous as it can result in complete separation of members and immediate loss of structural load paths.

It is important to note that lateral stiffness simulations were not deemed neccesary. These simualtons are crucial for analysing ability of the chassis during turning at high speeds but are not at all necessary for our sprint event where no turning occurs.

1.7.1 Static and Acceleration Simulations

1.7.1.1 Resting Load Case

The first simulation considered the static resting condition of the vehicle. This load case represents the forces acting on the chassis due to the weight of the chassis itself (red), driver (pink), motor (black), and inverter + coolant + supercapcitors (grey) when the car is stationary (fig. 1.5a) . These loads were included in all of the following simulations to ensure they were all accurate.

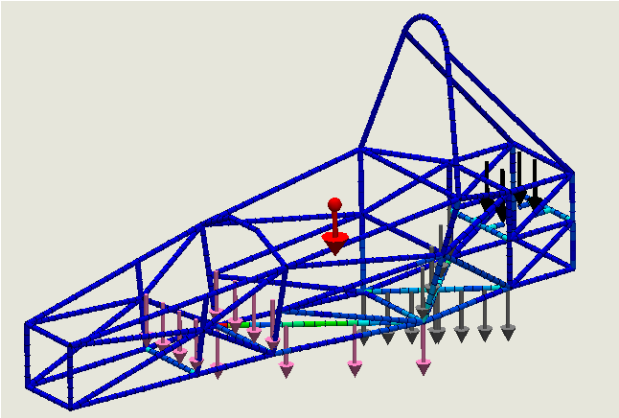

(a) resting forces

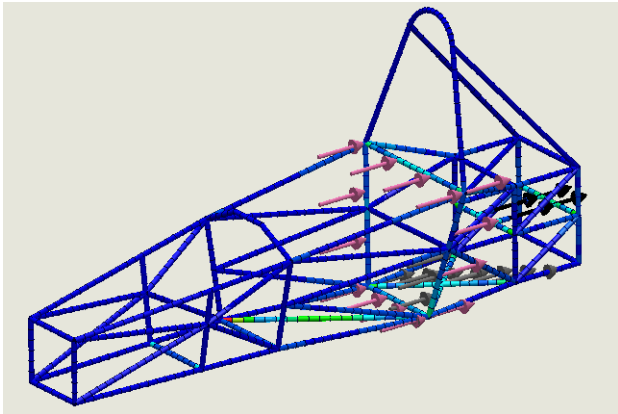

(b) acceleration forces

1.7.1.2 Acceleration Load Case

The primary operational load case for a sprint-optimised vehicle is the longitudinal force generated during maximum acceleration. When the vehicle accelerates, inertia produces a rearward force on the chassis that must be resisted by the structural members connecting the drivetrain and suspension mounts. This force was calculated using Newton's second law: $F = m \cdot a$ Where m is each components mass. Using the simulated peak acceleration: a = 1.33 g, the resulting force was applied through the drivetrain mounting points and transmitted through the frame toward the suspension nodes. This load case showed little impact on the chassis which ensured it is more then capable for the sprint event and these forces were included in the Motor Torque tests to ensure accuracy.

1.7.2 Motor Torque Load Case

The electric motor, which is mounted directly onto our chassis via a lockblot, produces a high level of torque which is reacted through the motor mounting structure. This creates a torsional load on the surrounding chassis members, which was modelled by applying the predicted maximum motor torque at the motor mounting points at the same time as the acceleration forces. The forces generated by the motor are calculated as:

$$\text{Max Torque at start: } T = 370 \text{ Nm},$$

$$\text{Distance between mounts: } D = 170 \text{ mm} = 0.17 \text{ m}$$

$$\text{Force: } F = \frac{T}{D} = \frac{370}{0.17} = 2176 \text{ N}$$

$$\text{Force on each front support (red arrow): } F_{\text{front}} = \frac{F}{2} = 1088 \text{ N (up)}$$

$$\text{Force on each rear support (red arrow): } F_{\text{rear}} = \frac{F}{2} = 1088 \text{ N (down)}$$

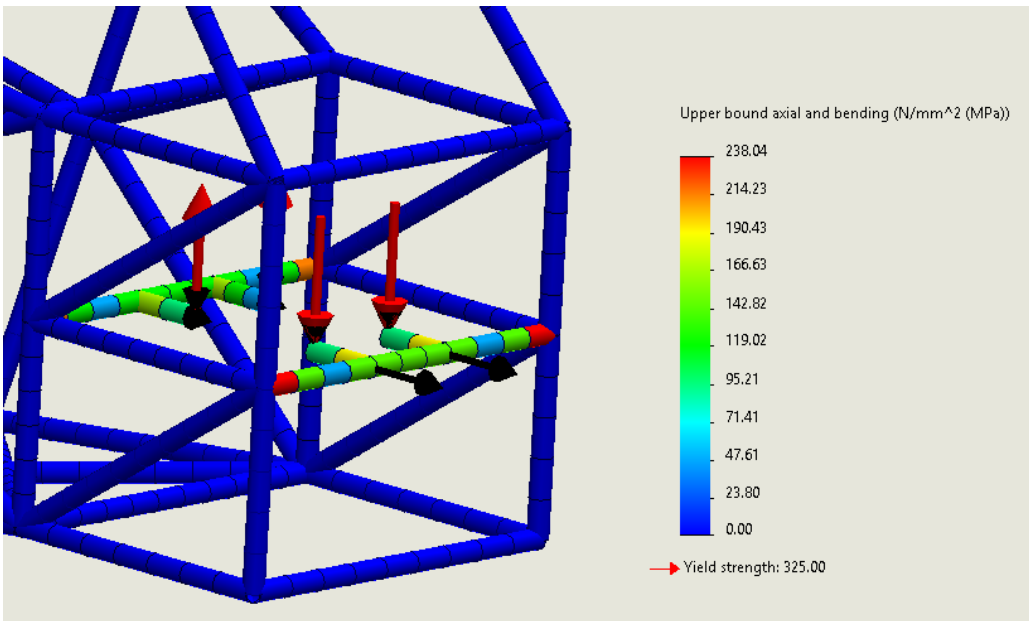

Figure 1.6: Motor Mount Stress Distribution

This simulation produced a much higher stress (238Mpa) but was stilll safely within our yield, compressive force and weld criteria. This is crucuial as it ensures the motor is not close to ripping itself out of its mounts during the sprint.

In large vehicles such as trucks, drivetrain torque can sometimes produce significant global chassis torsion, requiring the entire frame to resist twisting loads. However, the configuration used in this vehicle differs significantly. The motor is mounted with its axis parallel to the driven wheels, meaning the primary torque reaction acts along the longitudinal axis of the vehicle. Because the chassis is much stiffer in the longitudinal direction due to the triangulated spaceframe structure, the resulting torsional deformation of the full chassis is relatively small ($<< 1mm$ of dislacement) and therefore not a concern.

1.7.3 Front Impact Simulation

A front impact scenario was analysed to evaluate the ability of the chassis to protect the driver during a collision. Initially, the front structure was analysed without additional support members to understand the baseline behaviour of the frame. The back of the car was fixed and a front impact of 120kN was applied and evenly distributed across the 4 corners of the front where the IA will be mounted. This force was based on the FS rule T3.18.3 that states we ”must prove that the AIP can withstand a load of 120kN”. This number is deisgned to represent the highest force the the IA can transmit to the chassis during a worst case head-on collsion using the standard FS IA.

This analysis can be used to show the process I went through in verifying all the bars in the struc-

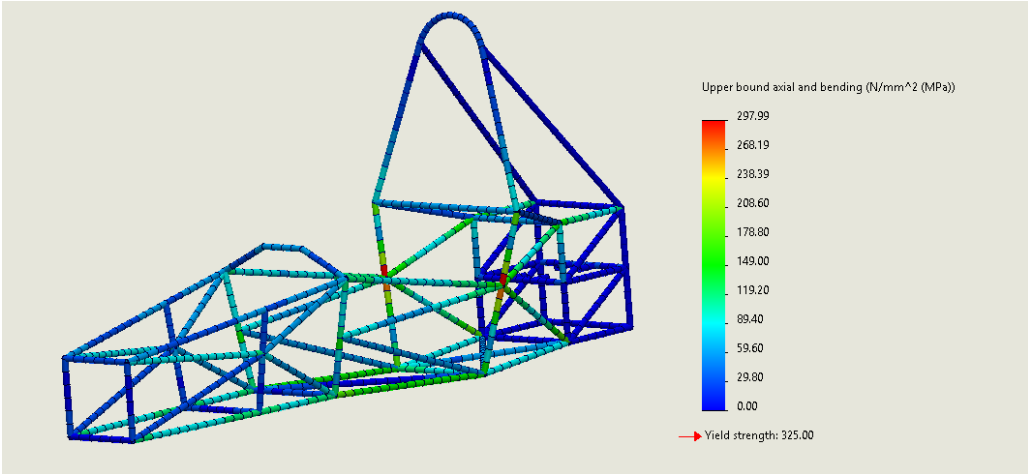

Figure 1.7: Failed Front Impact Stress Distribution

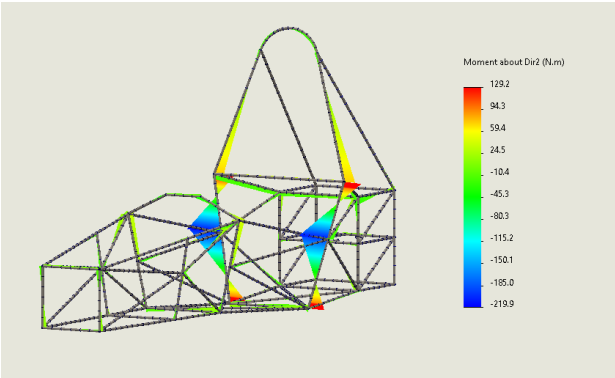

(a) Moment Distribution in Front Impact

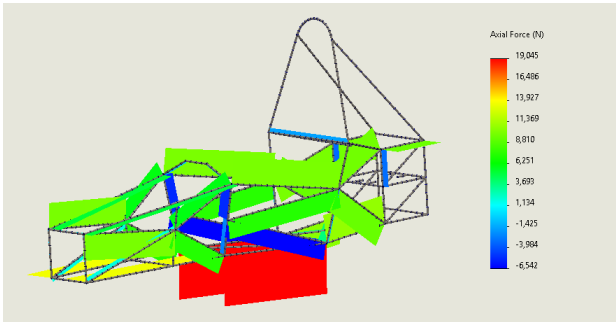

(b) Axial Force Distribution in Front Impact

ture were necessary for a safe chassis capable of protecting the driver in all impact scenarios by justifying the 2 bars at the top of the cockpit.

The simulation, without the support bars, showed that several members experienced high stresses, with the maximum (298MPa) occurring at a joint where four structural members converge in the side impact structure (fig. 1.7). This stress was over our safety value $(0.9 * 325 = 292.5MPa)$ but didn't as stated earlier a small risk of yield during worst case crash scenario was acceptable.

At this level of stress at such a complex joint, I was concerned about weld failure. Additionally, welded joints in this region may experience reduced strength due to the heat-affected zone created during fabrication. Looking into the FEA deeper I found the stress was mainly caused by a large moment of 219Nm at that mount (fig. 1.8a). Moments are more dangerous because they create a "prying" action that concentrates the entire load as a peak stress at the very edge of the weld, whereas axial forces distribute the load uniformly across the entire weld surface. With the total weld stress ¿ 0.75*failure stress a gausset to increase the throat, and therefore the strength of the weld or a strcutral change to the chassis would be required, with a gausset the cheaper and easier option. However, the axial force distribution shows one of the bars in the side impact structure had a high

compressive load of: 6.54kN. A critical buckling load calculation was carried out:

$$\text{Second moment of area: } I = \frac{\pi}{64}(D^4 - d^4) = \frac{\pi}{64}(25^4 - 21^4) = 9.63 \times 10^3 \text{ mm}^4,$$

$$\text{Reduced Euler load (imperfection factor 0.7): } P = 0.7 \cdot \frac{\pi^2 EI}{(KL)^2} = 0.7 \cdot \frac{\pi^2(200 \times 10^9)(9.63 \times 10^{-9})}{(1 \cdot 1.05)^2} = 12.0 \text{ kN},$$

$$\text{Design critical load with safety factor 0.5: } P_{\text{critical}} = 0.5 \cdot P = 0.5 \cdot 1.20 \times 10^4 = 6.0 \times 10^3 \text{ N} = 6.0 \text{ kN},$$

$$\text{Comparison with applied load: } P_{\text{critical}} = 6.0 \text{ kN} < 6.5 \text{ kN}$$

The compression saftey factors used are strict but in combination with the high yield risk, and potential weld failure (even with gausset, risk of maunfcaturing errors only increase) this confiigura-tion was not sufficiently robust. This verifies the neccesity of the additional support bars which FEA showed massive improvements: Max stress now 165Mpa and is distributed across a bar in tension not a joint or in compression also the weld joint stress was reducd by over 60% so no gussets require (fig. 1.9). Although this modification increased the chassis mass by approximately 1.45 kg (a 3.7% increase), the mass is still under the 45kg limit and the increase in driver safety made a justified design trade-off.

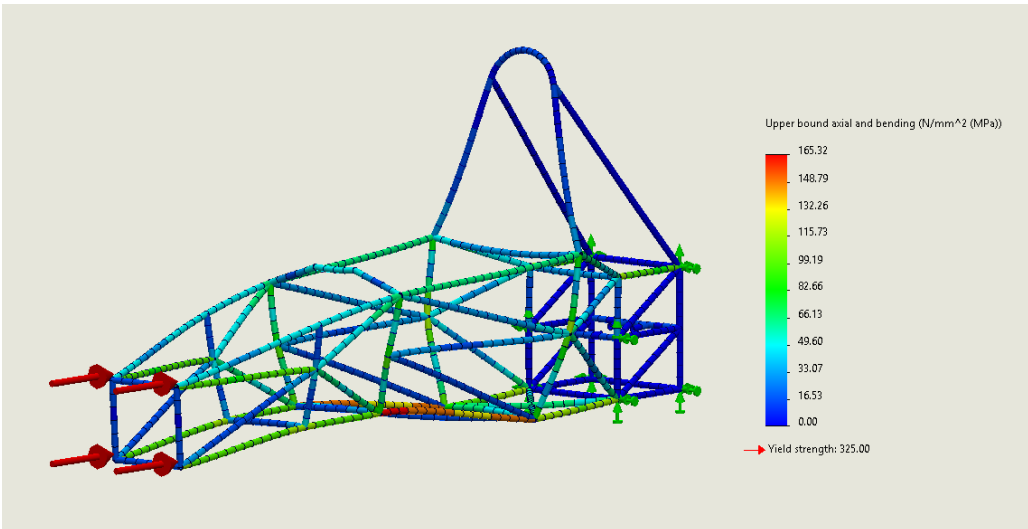

Figure 1.9: Successful Front Impact Stress Distribution

This method of analyis was carrried out on every bar not critical for arcitecure or mandated by the FS regulatons to ensure there were no unneccesary bars in the final chassis.

1.7.4 Rear and Side Impact Simulations

Rear and side impact simulations were also performed. Since we are only using our car in a sprint events there is no risk of collisions with other cars (e.g., T-bone crash). Therefore the forces are es-

timated based on a crash where the car spins of track and hits safety barrier by its side or rear first, 40kN and 60kN were used respectively as the assumed speed at impact during these scenarios in considerably lower due to energy loss from spinning out of control with rear impact being the least likely and slowest impact scenario. The Figures 1.10a and 1.10b show the distribution of forces (red arrows) and fixed joints (points marked green) as well as the results of these simulations.

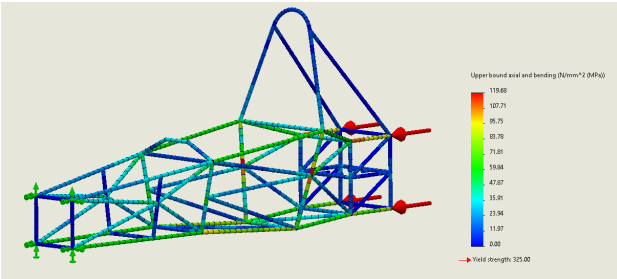

(a) Rear Impact: Force = 40kN

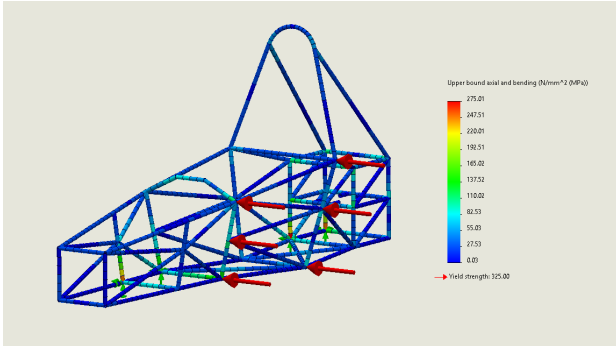

(b) Side Impact: Force = 60kN

The only region with elevated stress occurred near the suspension mounting points, where structural reinforcements are already present to support wheel loads. This stress is within the limits $(0.9 * 325 > 275)$ and furthermore a small yield in a side impact situation is acceptable as it very unlikely in the sprint event and not in any of the key safety areas so the driver is safe regardless. These simulations also showed no bars under high compression or welds under high moments or total stress.

1.8 Compliance and Conclusion

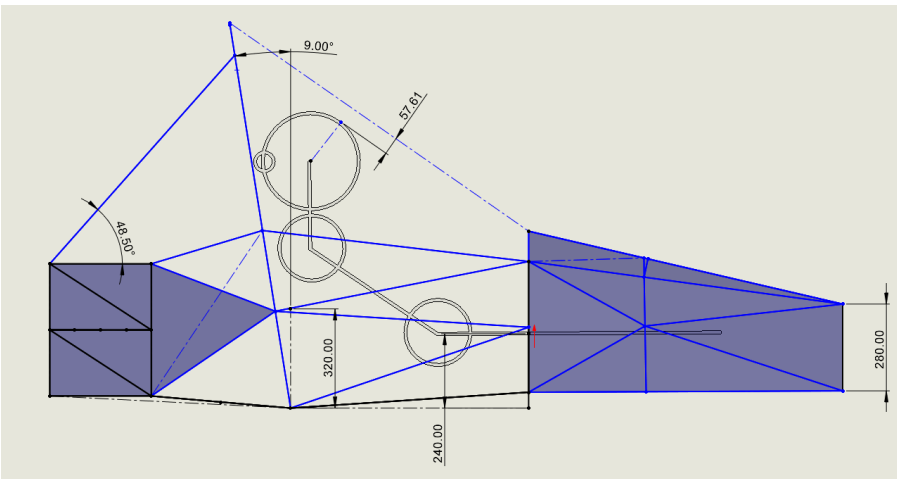

Figure 1.11: Compliance

The chassis design complies with the required regulations, including angle of main roll hoop support, helmet clearance, main roll hoop angle, side impact structure, IAP size (square with length

in figure), fully triangulated structure fig. 1.11. As well as cockpit opening dimensions, front bulkhead/leg cross-section, steering wheel clearance, seatbelt mount positioning (at main roll hoop cross-bar intersection), pedal box clearance, and packaging of all major components verified in CAD.

Overall,