Accumulator System Design for Formula Student Acceleration Event

Paul Vogelberg

March 28, 2026

Contents

1 Accumulator Design **1**

1.1 Introduction 1

1.1.1 Project Scope 1

1.2 Technology Selection 2

1.2.1 Design Requirements and Selection Criteria 2

1.2.2 Energy Storage Media Survey 2

1.2.3 Supercapacitor Detailed Analysis 3

1.2.4 Supercapacitor Cell Selection 3

1.2.5 Technology Selection Decision 4

1.3 Electrical System Design 5

1.3.1 System Architecture Overview 5

1.3.2 Electrical Power Systems 5

1.3.2.1 Pack Configuration & Power Distribution 5

1.3.2.2 Safety & Protection Systems 6

1.3.3 Electronic Monitoring & Control Systems 7

1.3.3.1 Cell Voltage Monitoring 8

1.3.3.2 Temperature Monitoring 9

1.3.4 Tolerance Analysis 9

1.3.5 System Integration 10

1.4 Mechanical Design and Packaging 10

1.4.1 Segment Design 10

1.4.2 Accumulator Container (AC) & Integration with Vehicle 11

1.5 Results and Discussion 12

1.5.1 Design Criteria Achievement 12

1.5.2 Principal Design Trade-Offs 13

1.5.3 Comparison with LiPo Baseline 13
1.6 Future Improvements and Conclusion 13
1.6.1 Strategic Refinements for Implementation 13
1.6.2 Conclusion 14

Chapter 1

Accumulator Design

1.1 Introduction

This report presents the accumulator design for a Formula Student electric vehicle under an acceleration-event-only scenario.

1.1.1 Project Scope

The design encompasses the following scope:

- Technology down-selection and cell selection for an acceleration-only duty cycle.
- Electrical architecture at pack and segment level (busbars, sensing, AMS communication).
- FS-required in-casing electrical safety measures: segment fuses and accumulator grounding/isolation concept at the container boundary.
- BMS slave-to-master monitoring architecture and master interface to the vehicle ECU.
- Mechanical packaging of segment modules and accumulator container layout.
- Analytical verification against power, energy, and voltage-sag requirements.

The following items are treated as out of scope for detailed derivation in this document and are stated as future or external work: all safety and charging systems outside the accumulator casing (including charger-side functions and external HV safety chain implementation), full BMS firmware implementation, full manufacturing process planning, exhaustive scrutineering documentation, and complete physical test campaign data.

1.2 Technology Selection

1.2.1 Design Requirements and Selection Criteria

Due to the nature of the acceleration-only event, the primary design driver is peak power delivery rather than total energy capacity. This shifts the focus towards technologies with high power density. To compare energy storage technologies, the following criteria were defined: (1) power output, (2) total energy capacity, (3) mass, (4) volume, and (5) price.

1. FS Rules limit accumulator output power to 80 kW (FS-EV 7.2.4). Power is treated as constant during the event because traction-limited periods are brief relative to total run time.

2. Event duration is set to 4 s based on top Formula Student performances, giving margin over typical 3.5 s runs.

Using the fundamental relationship $E = P \cdot t$, the required energy capacity is calculated:

$$E = 80 \text{ kW} \times 4 \text{ s} = 320 \text{ kJ} = 89 \text{ Wh}$$

The remaining optimisation criteria are minimised with weightings mass 3×, volume 1×, and cost 2×.

1.2.2 Energy Storage Media Survey

Technologies are shortlisted by minimum mass for the required power and energy targets. Table 1.1 summarizes representative power and energy densities and the implied minimum mass for this event.

Table 1.1: Comparative performance of electrochemical energy storage technologies. Values represent commercially available cell ranges [1, 2, 3, 4]. Minimum mass calculated for 80 kW power and 89 Wh energy requirements.

Technology	Power Density (W/kg)	Energy Density (Wh/kg)	Limiting Density	Min. Mass (kg)
Supercapacitor (EDLC)	1,000 – 15,000	5 – 10	Energy	8.9
Li-ion Capacitor (LIC)	2,000 – 10,000	10 – 20	Power	8.0
High-Power Li-Po	2,000 – 8,000	100 – 180	Power	10.0
Lithium Titanate (LTO)	3,000 – 5,100	50 – 80	Power	15.7
Lithium Iron Phosphate (LFP)	200 – 2,000	90 – 160	Power	40.0
Li-ion (NMC/NCA)	250 – 1,500	150 – 260	Power	53.3

From Table 1.1, three candidates remain: EDLC supercapacitors, lithium-ion capacitors (LIC), and high-power lithium-polymer batteries.

1.2.3 Supercapacitor Detailed Analysis

Supercapacitors are treated as the primary candidate, with lithium-polymer cells used as a benchmark. EDLC devices are selected within the supercapacitor class due to favorable power capability.

$$E = \frac{1}{2}CV^2 = \frac{1}{2}C(V_{max}^2 - V_{min}^2) \tag{1.2.1}$$

Where E is energy in joules, C is capacitance in farads, and V is voltage in volts.

From Equation (1.2.1), voltage sag significantly affects usable energy capacity, necessitating careful consideration of voltage ranges. The upper limit is set by FS-EV maximum voltage regulation (600 V per FS-EV 4.1.1), while the lower limit is determined by inverter and motor minimum operating requirements. Based on the selected powertrain configuration, a conservative minimum voltage of 400 V is assumed.

$$C = \frac{2E}{V_{max}^2 - V_{min}^2} = \frac{2 \cdot 320 \text{ kJ}}{600 \text{ V}^2 - 400 \text{ V}^2} = 3.2 \text{ F} \tag{1.2.2}$$

To achieve the required capacitance of 3.2 F at 600 V, cells are connected in series (FS-EV 4.1.1 voltage limit). The general relation for non-identical cells reduces to the equally rated case as:

$$\frac{1}{C_{total}} = \sum_{i=1}^{n} \frac{1}{C_i} \;\Rightarrow\; C_{series} = \frac{C_i}{n} \tag{1.2.3}$$

Where C_i is the individual cell capacitance, and n is the number of cells in series or parallel.

For the design specification, assuming a cell voltage of 3 V, 200 cells are required in series to reach 600 V (maximum per FS-EV 4.1.2). To achieve the required capacitance of 3.2 F, cells must provide 640 F nominal capacitance.

Another key parameter is the Equivalent Series Resistance (ESR), which becomes an important consideration for series-connected supercapacitor cells. The total voltage sag under load is calculated as:

$$V_{sag} = I_{peak} \cdot ESR_{total} = \frac{P}{V_{min}} \cdot ESR_{cell} \cdot n \tag{1.2.4}$$

Where I_{peak} is the peak current drawn from the pack, and ESR_{total} is the total ESR of the pack equal to the cell ESR multiplied by the number of cells, n.

1.2.4 Supercapacitor Cell Selection

Initial evaluation favored SC3, which offered a good balance between mass and required capacitance while facilitating easy segmentation with its standard 3 V cell voltage. However, further supplier investigation revealed SC2 as a lower-mass alternative. Ultimately, SC1 was selected due to its significantly lower ESR, which minimises voltage sag during the acceleration event, despite a mass penalty relative to other candidates.

Table 1.2: Commercial supercapacitor cell comparison for FS application. Specifications from manufacturer datasheets. Cell count, total capacitance, and voltage sag calculated for 600 V pack with 80 kW peak power at 400 V minimum.

ID	Part Number	Cap. (F)	Volt. (V)	ESR (mΩ)	Cell Mass (kg)	Cells (n)	Total Mass (kg)	Total Cap. (Eq. 1.2.3) (F)	Volt. Sag (Eq. 1.2.4) (V)
SC1	C46W-3R0-0600	600	3.0	0.70	0.139	200	27.8	3.0	28.0
SC2	C35S-3R0-0600	600	3.0	1.40	0.104	200	20.8	3.0	56.0
SC3	CHQ-3R0607R-TW	600	3.0	1.30	0.135	200	27.0	3.0	52.0
SC4	SCCY1KB707SLBLE	700	2.7	1.30	0.163	223	36.3	3.14	58.0
SC5	SCCY83B607SLBLE	600	2.7	1.60	0.135	223	30.1	2.69	71.4

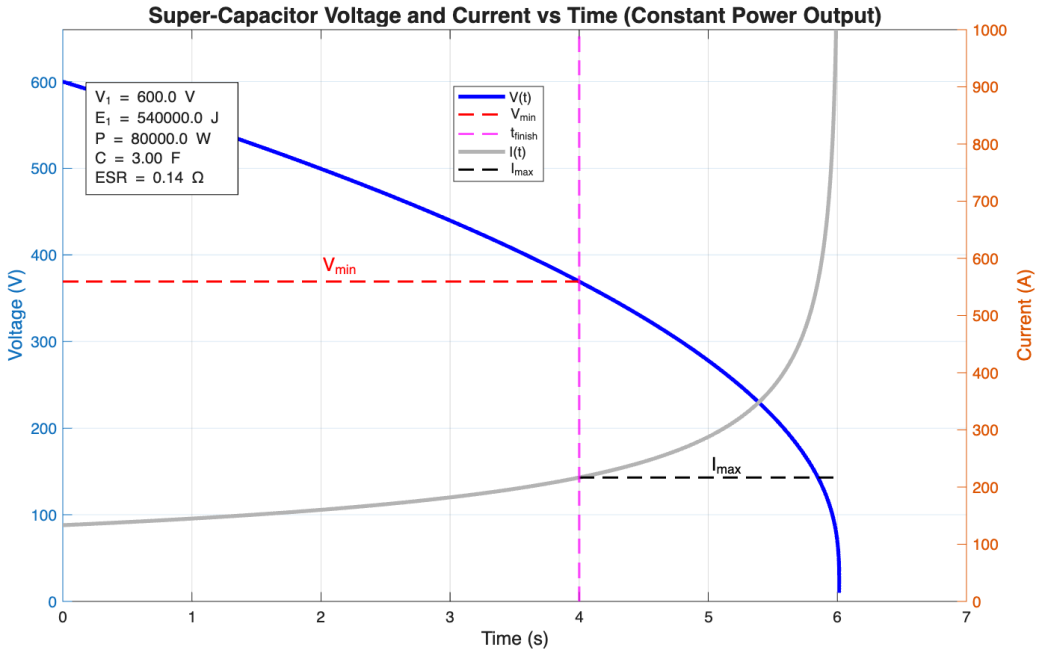

Figure 1.1: Selected supercapacitor (SC1) discharge characteristics showing voltage and current evolution over time during constant 80 kW power discharge.

1.2.5 Technology Selection Decision

The three candidates (EDLC, LiPo, LIC) are compared on mass, volume, cost, performance, and availability.

LIC technology is excluded due to limited commercial data for 600 V implementations and added conversion complexity.

High-power LiPo remains the benchmark because it is widely used in Formula Student.

Comparison proceeds via quantifiable metrics of mass, volume, and cost. A weighted scoring system is applied using the following formulation:

$$\text{Score} = \frac{\text{Best Value in Category}}{\text{Component Value}} \cdot \text{Weight}$$

Based on combined quantifiable and performance metrics, EDLC supercapacitors have been selected for this accumulator design. The technology delivers a substantial mass and cost advantage (22.7% overall scoring benefit) while offering consistent, repeatable performance.

Table 1.3: Comparison of EDLC supercapacitor and high-power Li-Po battery technologies for acceleration-only application. Weighted scoring system applied with mass (3×), price (2×), and volume (1×) weightings.

Technology	Cell Component	Total Mass (kg)	Price	Volume (L)
EDLC Cap.	C46W-3R0-0600	27.80	£4,000	38.70
LiPo Battery	Melasta SLPB9145180	40.00	£5,500	22.00
Weighted Scoring Analysis				
Metric	**Weighting**	**EDLC Score**	**LiPo Score**	**Best**
Total Mass	3×	3.00	2.09	EDLC
Price	2×	2.00	1.45	EDLC
Volume	1×	0.57	1.00	LiPo
Total Score		**5.57**	**4.54**	**EDLC**
			EDLC Advantage:	**+22.7%**

1.3 Electrical System Design

1.3.1 System Architecture Overview

Figure 1.2 shows the top-level accumulator architecture. This section focuses on segment-level electrical design: series-connected segments, fuse-separated HV stages, and daisy-chained AMS slaves (NXP MC33664). The LV domain includes the BMS master (FRDM33664BEVB), which interfaces with the AMS chain via the Isolated TPL Protocol and the vehicle ECU (STM32 Nucleo-F4) via a CAN Bus. Outside of the accumulator safety and charging blocks are shown for completeness but are outside this report's detailed scope. Galvanic isolation is implemented between all HV-referenced AMS slaves and LV control electronics through the isolated TPL interface; no direct conductive path exists from accumulator HV to ECU communication lines.

1.3.2 Electrical Power Systems

1.3.2.1 Pack Configuration & Power Distribution

Supercapacitors are connected via busbars rather than direct cell-to-cell welding for thermal expansion management and assembly accessibility. Busbar material selection minimises $\rho_e \cdot \rho_m$, where ρ_e is electrical resistivity and ρ_m is mass density. Although copper exhibits superior electrical performance, aluminium 1005 was specified for compatibility with aluminium cell terminals and to reduce overall system mass. This choice satisfies FS-EV 4.5.11 by using aluminium as an intentional current-path conductor rather than relying on fasteners.

Busbar connection area is matched to the terminal cross-section (terminal diameter $d_t = 10$mm), with average busbar length $L \approx 50$mm and target resistance 0.1mΩ per connection. All connections use direct metal-to-metal compression without compressible materials (FS-EV 4.5.12). The required

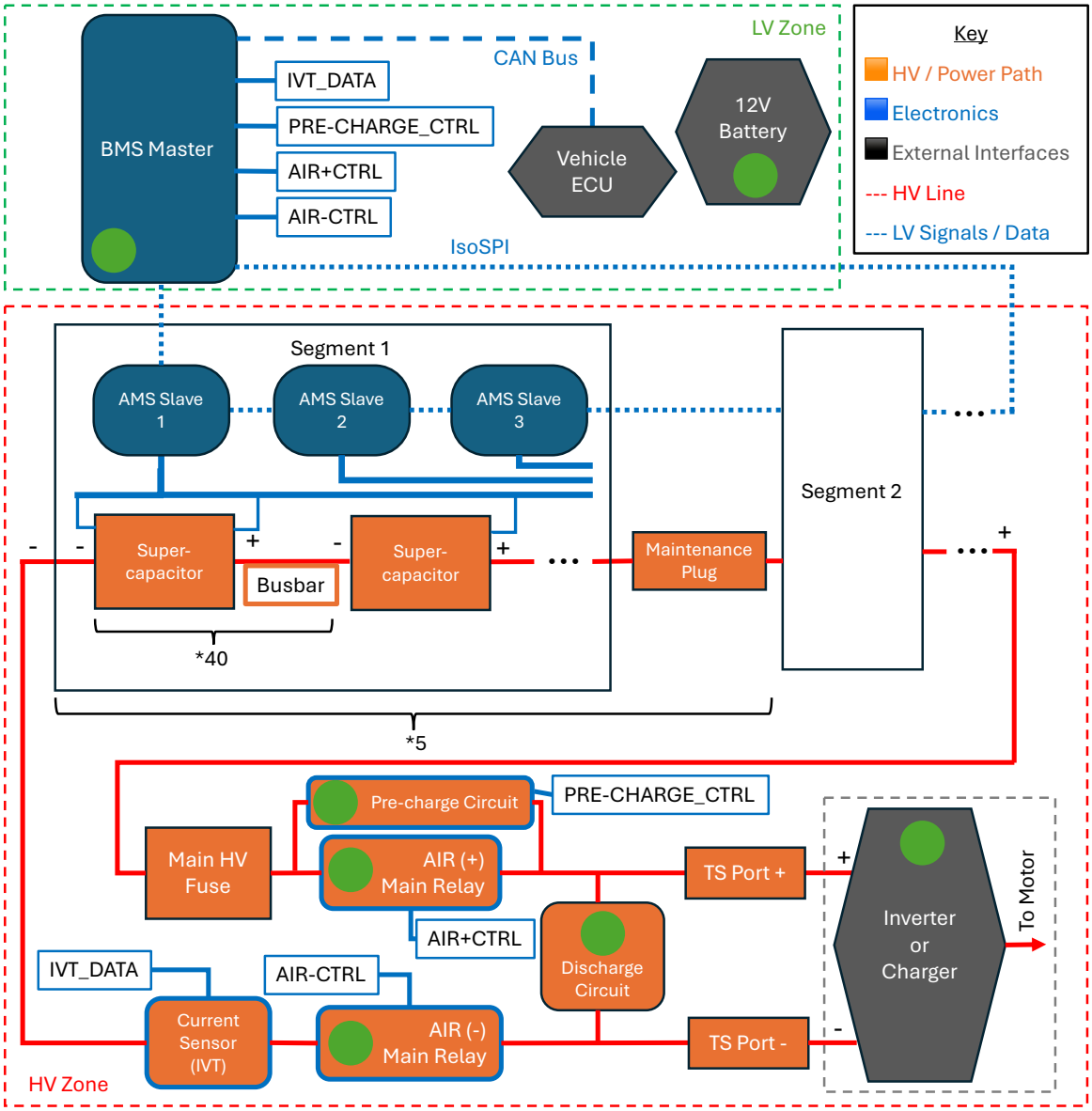

Figure 1.2: Top-level electrical system architecture showing energy flow from supercapacitor cells through busbars and segments to the inverter, alongside control and communication pathways within the AMS. Green dots represent 12V battery connection

thickness is calculated as:

$$t = \frac{\rho_e L}{R d_t} = 1.41 \text{ mm} \approx 1.45 \text{ mm (standard 15 gauge)}$$

1.3.2.2 Safety & Protection Systems

This subsection is intentionally limited to safety functions inside the accumulator casing. The implemented mandatory measures are segment-level fusing and accumulator grounding/isolation provisions at the casing boundary, consistent with FS-EV requirements for protected current paths and galvanic isolation.

Grounding is treated as a floating HV system with insulation monitoring against chassis (FS-EV 4.3.1). Fuse placement is integrated per segment to localize faults and limit fault energy within the con-

tainer. For EMI robustness and rule-compliant layout practice, communication uses differential signaling and segregated HV/LV routing to satisfy FS-EV 4.3.3 physical separation requirements. Vehicle-level shutdown-chain implementation, AIR actuation hardware outside the container, and charging safety circuitry are outside this report scope.

1.3.3 Electronic Monitoring & Control Systems

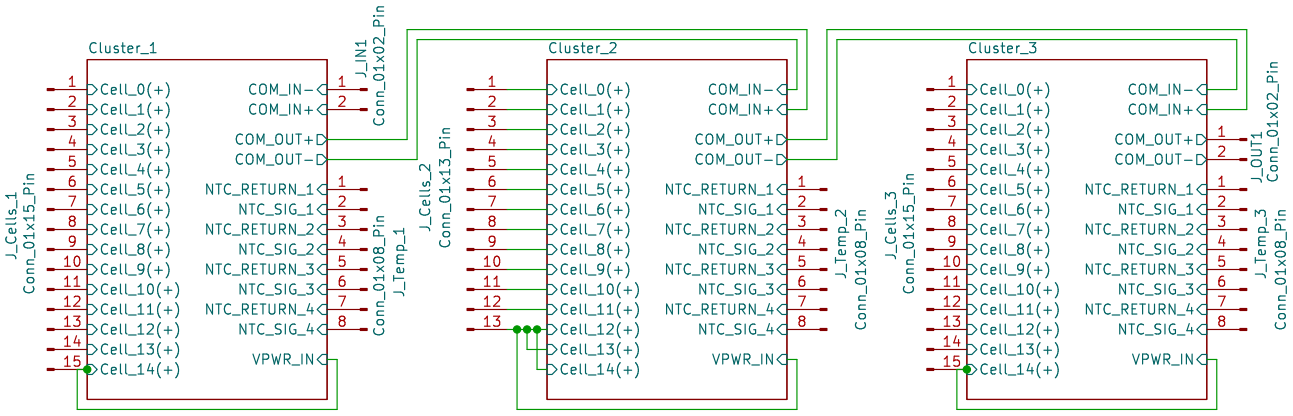

Figure 1.3: Complete segment AMS PCB schematic showing MAX17853 configuration, voltage sensing circuits, and cell balancing topology for 40-cell segment monitoring.

The controller IC is powered directly by the local cell stack via the `VPWR` pins and therefore floats at the segment potential. Functional safety support is provided through open-wire detection using internal current sources at the measurement taps and redundant internal voltage references for ADC cross-checking, aligned with ISO 26262 ASIL-C/D-oriented design practice. The daisy-chain interface follows TPL pin mapping, with `COM_IN` receiving data from the lower segment and `COM_OUT` forwarding data to the upper segment.

The monitoring network adopts a scalable master-slave topology using NXP MC33771 controllers across all five accumulator segments. Communication is implemented with NXP TPL (Twisted Pair Link) differential signaling, whose current-mode transmission provides strong immunity to inverter-generated EMI. Galvanic domain separation in the daisy chain is maintained using 470 pF high-voltage safety capacitors ($C4$, $C5$), which couple communication across stacked segment voltage domains while blocking DC transfer. On-board routing of `COM_IN` and `COM_OUT` is implemented as impedance-controlled differential pairs with a 100 Ω target to preserve signal integrity.

The TPL bus is implemented as a single-ended daisy chain from the BMS master to the first AMS slave; data is then forwarded through all 15 slaves via `COM_OUT` to `COM_IN`. The far end of the chain is terminated using the NXP-recommended end-of-line network to ensure signal integrity and avoid reflections.

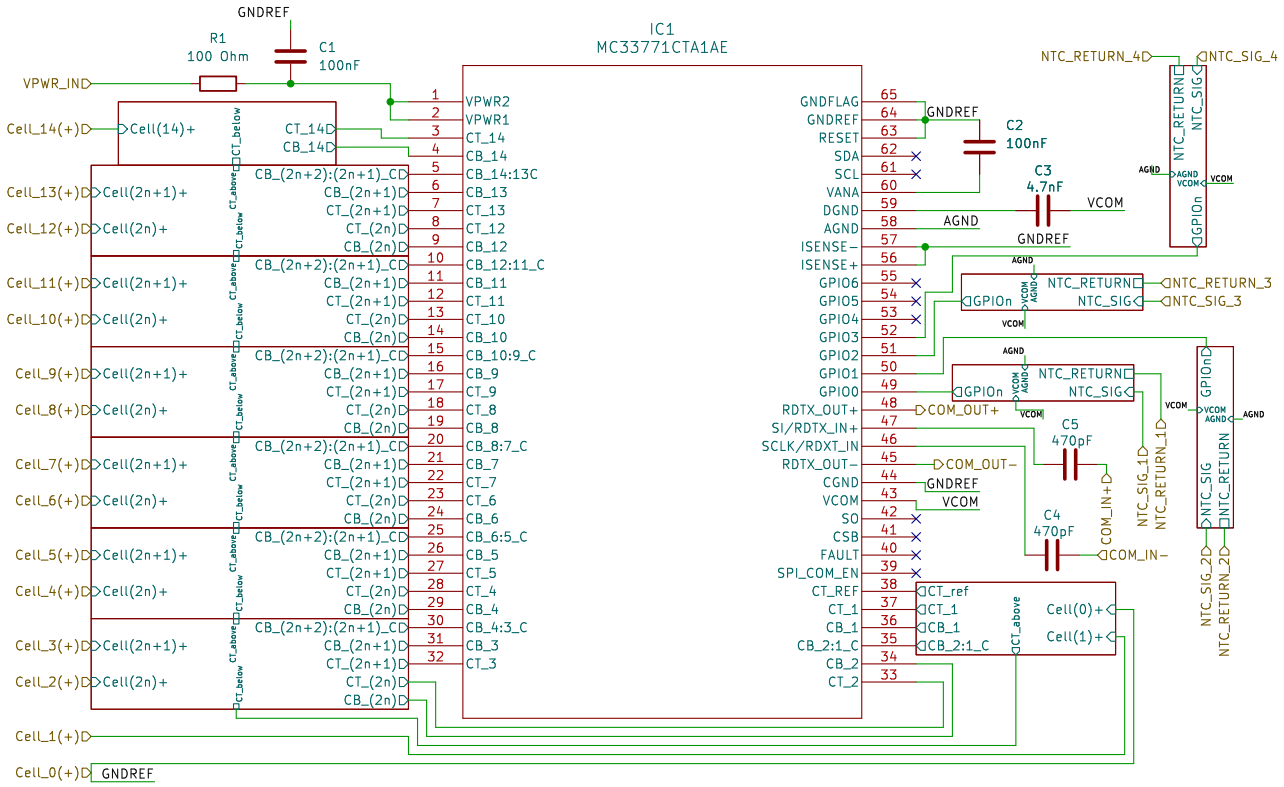

Figure 1.4: Power Management IC (PMIC) circuit providing regulated power supply to the AMS electronics from the high-voltage pack with isolation and protection features.

Within the FS-focused scope, each slave device performs segment voltage and temperature acquisition and reports diagnostic status to the BMS master. The BMS master executes pack-level limit checks, fault aggregation, and communicates accumulator status to the vehicle ECU. This document therefore focuses on the slave measurement chain, master supervision role, and master-ECU interface definition, while omitting full software implementation details.

1.3.3.1 Cell Voltage Monitoring

Cell voltage sensing uses an anti-aliasing filter with $R = 100\,\Omega$ and $C = 47\,\text{nF}$. The corresponding cutoff frequency is

$$f_c = \frac{1}{2\pi RC} = \frac{1}{2\pi(100)(47 \times 10^{-9})} \approx 33.8\,\text{kHz},$$

which attenuates high-frequency inverter switching content while preserving measurement bandwidth for pack diagnostics. Passive balancing is implemented through switchable resistors with $R_{bal} = 33\,\Omega$. At a nominal maximum cell voltage of 3 V, the balancing current is

$$I_{bal} = \frac{V_{cell}}{R_{bal}} = \frac{3\,\text{V}}{33\,\Omega} \approx 90.9\,\text{mA},$$

and the corresponding dissipation per balancing branch is

$$P_{diss} = I_{bal}^2 R_{bal} = (0.0909)^2 \times 33 \approx 0.27\,\text{W}.$$

This thermal load requires resistor packages with sufficient margin, so the format 1210, rated at ??, was chosen for stable operation during balancing intervals.

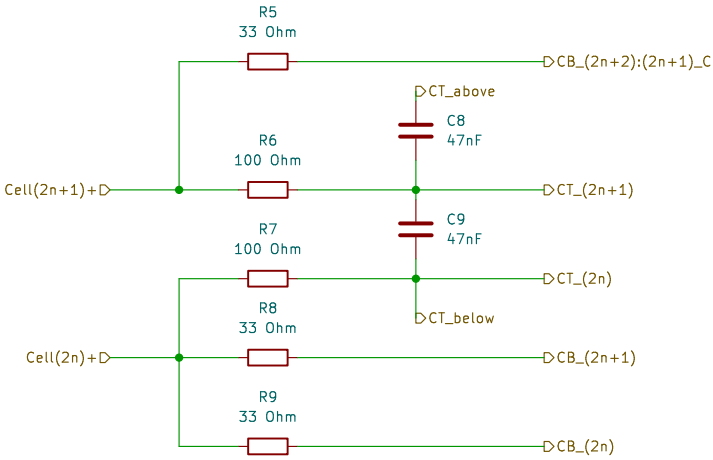

(a) Middle filter circuit for noise suppression and signal conditioning in the AMS communication and sensing lines, ensuring accurate voltage and temperature measurements.

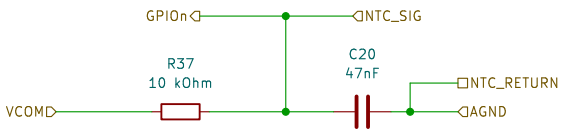

(b) Temperature sensing circuit with NTC thermistor placement strategy and conditioning circuitry for monitoring 30% of cells per FS-EV requirements.

Figure 1.5: Signal conditioning circuits for AMS monitoring

1.3.3.2 Temperature Monitoring

Temperature channels are conditioned with an RC input filter ($R = 10\,\mathrm{k}\Omega$, $C = 47\,\mathrm{nF}$) to suppress transient noise that could otherwise cause false over-temperature flags. NTC thermistors are connected directly to MC33771 GPIO measurement channels, and cell temperature is reconstructed from the digitised ratio-metric voltage. The protection strategy applies a hard fault response with AIR de-energisation when any monitored cell exceeds the configured threshold of $T > 60°$C.

1.3.4 Tolerance Analysis

The supercapacitor datasheet gives a capacitance tolerance of +0–20% (typically +5–10%). This tolerance dominates electrical spread and therefore defines the binning benefit analysis.

Cells are supplied in packs of 90, requiring purchase of three packs and selection of the best 200 cells. For this event, selection is simplified to maximizing capacitance rather than minimizing variance because balancing heat is not expected to be the limiting factor.

The cell capacitances are modelled using a beta distribution:

$$T = 0.2 * Beta(\alpha = 3, \beta = 5)$$

Selecting the highest cells, the expected accumulator capacitance is calculated using Equation (1.2.3). Performing this Monte Carlo binning simulation to find average mean total capacitance and capacitance range, we obtain the following improvements to our initial model:

Table 1.4: Accumulator performance comparison for nominal and binned (average) capacitance scenarios. Relative differences are reported against the nominal case. Constants: constant power = 80 kW, total voltage = 600 V, finish time = 3.5 s, $R_{total} = 0.16\,\Omega$.

Metric	Nominal	Binned	Difference
Capacitance (F)	3	3.26	+8.8%
Initial Energy (kJ)	540	587	+8.8%
Minimum Voltage (V)	404.7	424.2	+4.8%
Maximum Current (A)	197.7	188.6	-4.6%
Capacitance Range	0%	10%	

1.3.5 System Integration

1.4 Mechanical Design and Packaging

The electrical requirement of 200 series-connected cells necessitates segmentation into 5 modules of 40 cells each to maintain voltage domains within FS-EV regulations. All segments are housed within a single Accumulator Container (AC), separated by internal insulating walls and fuse-plug interfaces.

1.4.1 Segment Design

Segment design prioritises modularity and replicability, with each segment containing series-connected cells secured by mechanical holders and electrically isolated by spacing. Cells are separated by busbars rather than direct welding to prevent mechanical stress during thermal expansion cycles, ensuring long-term reliability despite increased harness complexity.

Each segment comprises two 20-cell sub-modules in a 5×4 rectangular grid, leaving a central corridor for sensing and wiring.

Although honeycomb packing is generally denser, it provides only about 1% volume reduction once constrained to a cuboid envelope, so the rectangular layout is retained.

The PCB layout (detailed in Section **??**) is positioned to fit within the segment depth and centered to facilitate harness routing and cell connection while enabling mechanical accessibility via bracket-based mounting to the FR4 matrix board. PCB peripheral spacing accommodates fuse and segment cable routing.

Fuses are mounted to the casing and their exact position varies by segment because of inter-segment packaging constraints. Busbar topology is consistent, but local routing varies to support fuse placement.

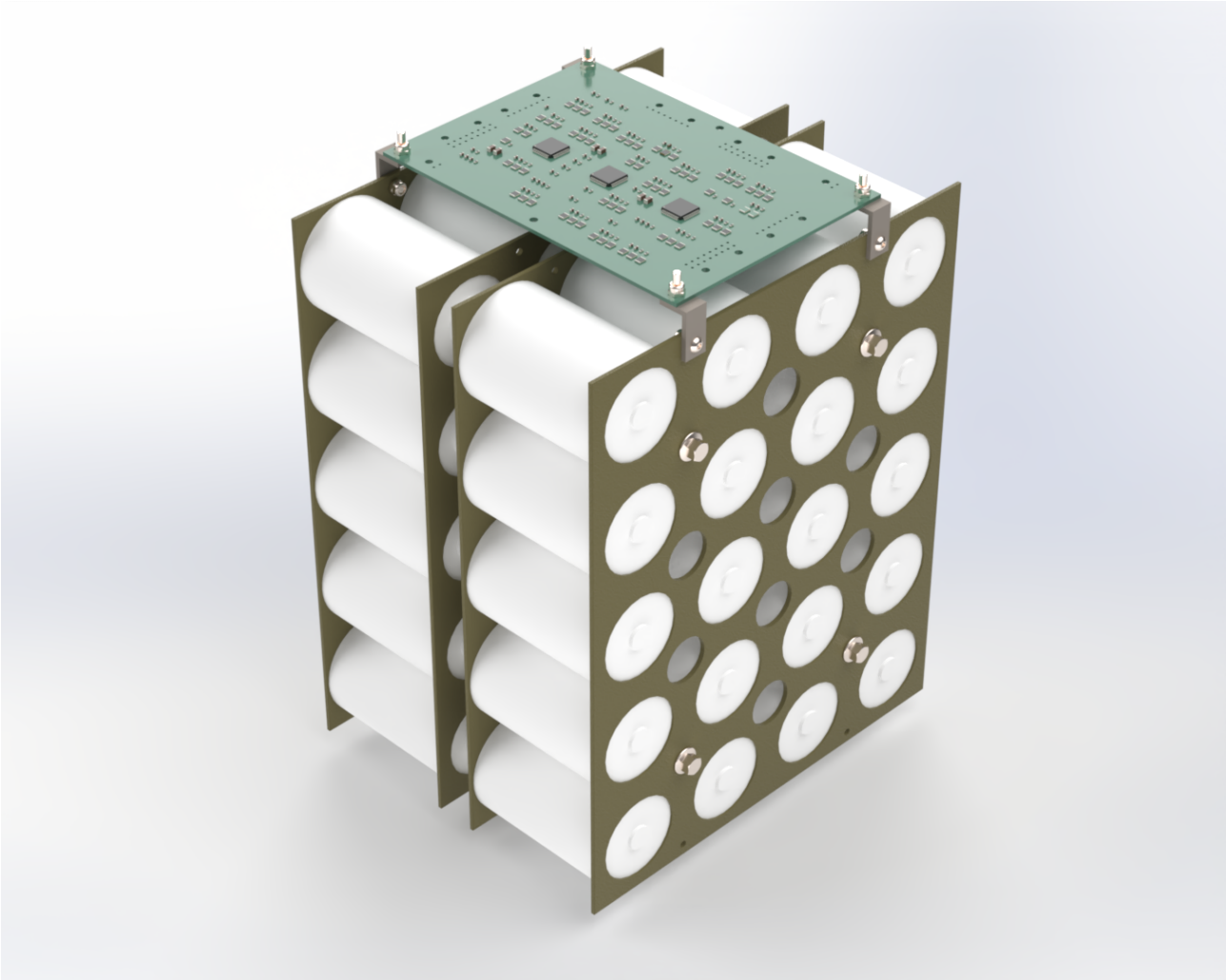

Figure 1.6: Accumulator segment design without enclosure and busbar connections.

1.4.2 Accumulator Container (AC) & Integration with Vehicle

The accumulator is placed between driver and motor, below the inverter, to reduce HV cable mass and locate system mass near the rear axle. This packaging envelope drives the 3–2 (top) segment arrangement.

The external casing is fabricated from stainless steel featuring 0.9 mm walls and a 1.2 mm floor panel to meet underbody impact protection requirements. The three-piece assembly—removable bolted lid, welded lower shell, and base floor—enables service access while maintaining structural integrity.

Detailed manufacturing process planning, quality control workflow, and full BOM costing are not expanded in this report and are deferred to implementation documentation.

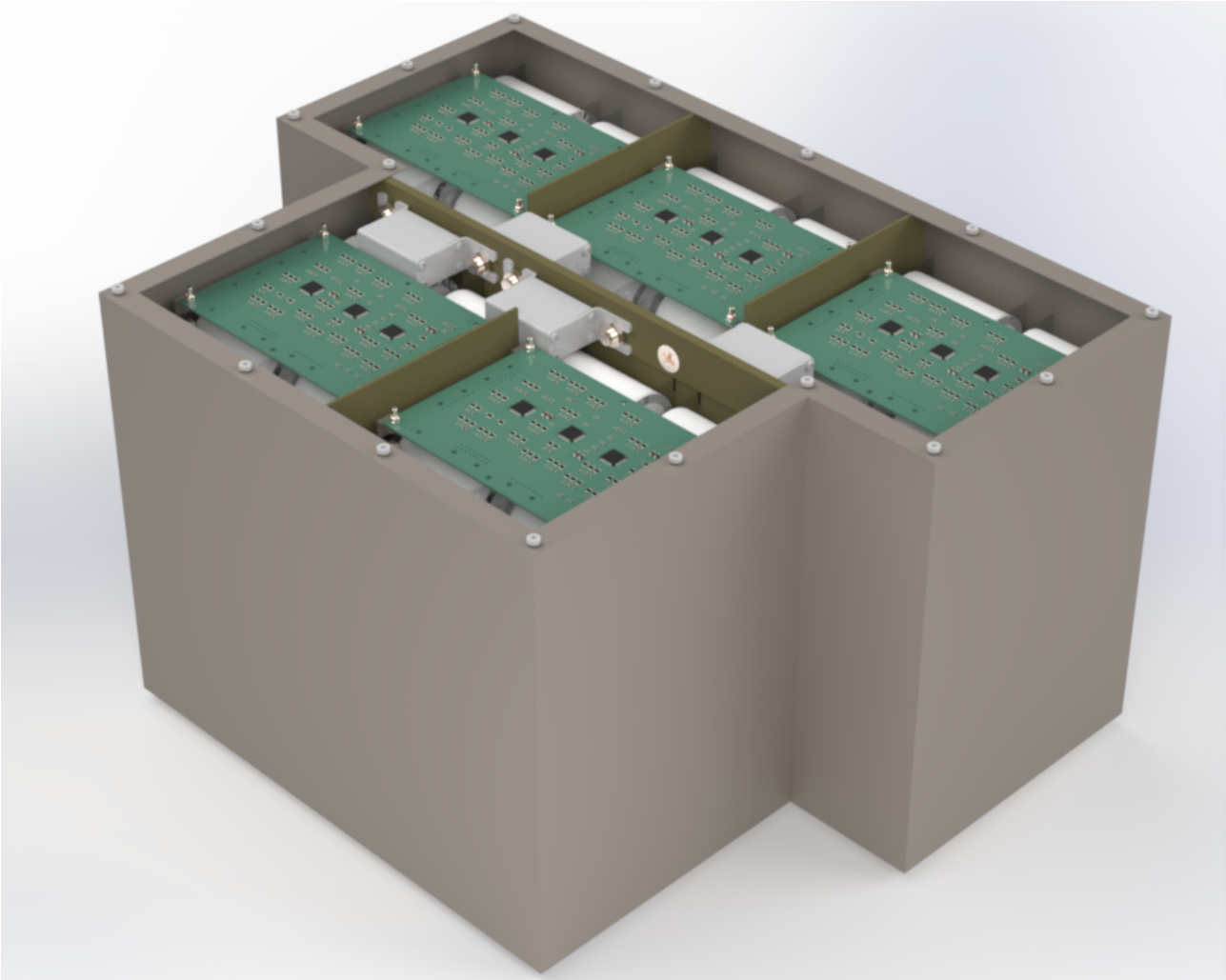

Figure 1.7: Accumulator design with lid removed for visibility.

1.5 Results and Discussion

1.5.1 Design Criteria Achievement

The finalised design satisfies all primary performance criteria:

1. Peak power delivery: 80 kW sustained across the acceleration event.
2. Usable energy capacity: 320 kJ available over the 600–400 V operating window.
3. Total mass: approximately 38.5 kg (cells only; add 0.5 kg for harness, insulation, fasteners).
4. Volume: approximately 39 L, within the vehicle's 3–2 segment packaging envelope.
5. Cost: component cost is favorable relative to lithium-polymer alternatives per Table 1.3 (+ ?%).

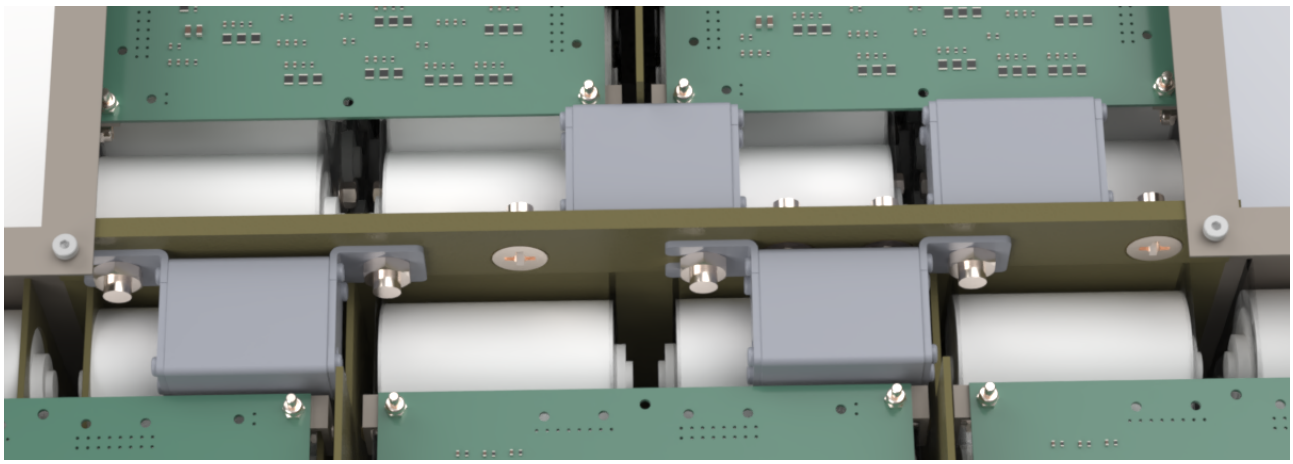

Figure 1.8: Fuse plug placement within the accumulator container.

1.5.2 Principal Design Trade-Offs

The fundamental trade-off in supercapacitor selection is voltage sag versus total system mass. Minimising ESR requires larger-diameter cell terminals and busbars, increasing mass; acceptance of higher sag risks insufficient inverter margin. The design balances this by selecting SC1 (lowest ESR, moderate mass) over lighter alternatives (SC2, SC5) that would create unacceptable voltage drop. This selection prioritises operational robustness and performance consistency over minimal mass.

1.5.3 Comparison with LiPo Baseline

Comparison with lithium-polymer technology demonstrates supercapacitor superiority under the specified acceleration-only duty cycle. While Li-Po offers superior volumetric energy density, the supercapacitor architecture provides ??% better overall score when mass, cost, and power delivery are weighted according to Formula Student competition priorities. Additionally, supercapacitor cycle life (¿1,000,000 cycles) and run-to-run performance consistency offer competitive advantages unlikely to be replicated by battery chemistry in repeated competitive environments.

1.6 Future Improvements and Conclusion

1.6.1 Strategic Refinements for Implementation

The design establishes a coherent architecture suitable for prototyping and integration. Key refinement priorities for implementation include: (1) detailed thermal analysis; (2) full BMS firmware development including fault detection, cell balancing state machines, and communication protocols; (3) manufacturing partner engagement for cost and lead-time validation; and (4) comprehensive

testing including high-voltage insulation verification, fault-injection trials, and track-based dynamic performance characterisation.

1.6.2 Conclusion

The accumulator system design successfully combines proven supercapacitor technology with modular electrical and mechanical architecture to meet Formula Student acceleration-event requirements. The analysis demonstrates that EDLC supercapacitors deliver superior performance to lithium-polymer alternatives under the specified duty cycle, with ??? better weighted score across mass, cost, and power density criteria. The design provides clear implementation pathways for component sourcing, manufacturing, and vehicle integration. Subsequent development phases focus on prototype validation, thermal characterisation in realistic vehicle operating conditions, and iterative refinement based on test data.

References

[1] Thomas B. Reddy. *Linden's Handbook of Batteries*. 4th. Primary source for Pb-acid, NiMH, and general Li-ion ranges. McGraw-Hill Education, 2011.

[2] Yu Miao et al. "Current Li-Ion Battery Technologies in Electric Vehicles and Opportunities for Advancements". In: *Energies* 12.6 (2019). Source for LTO, LFP, and NMC comparisons, p. 1074.

[3] Noshin Omar et al. "Lithium ion capacitor: A review of technology and thermal behaviors". In: *International Journal of Energy Research* 38.12 (2014). Source for Li-ion Capacitor (LIC) specific data, pp. 1529–1542.

[4] Unmanned Systems Technology. *High-Capacity Batteries for Drones & Robotics: Technology Review*. `https://www.unmannedsystemstechnology.com`. Source for High-Discharge Li-Po (Drone) performance data. 2024.