Accumulator System Design for Formula Student Acceleration Event

Paul Vogelberg

February 10, 2026

Acronyms and Abbreviations

AC	Accumulator Container
AMS	Accumulator Management System
ESR	Equivalent Series Resistance
FS	Formula Student
HV	High Voltage
IMD	Insulation Monitoring Device
LV	Low Voltage
SOC	State of Charge
TSAL	Tractive System Active Light

Contents

0.1 Introduction . . . 1

0.1.1 Role of Accumulator . . . 1

0.1.2 Design Assumptions and Target KPIs . . . 1

0.1.3 Derived Technical Requirements . . . 1

0.1.4 Project Scope . . . 1

0.2 Technology Selection . . . 2

0.2.1 Design Requirements and Selection Criteria . . . 2

0.2.2 Energy Storage Media Survey . . . 2

0.2.3 Supercapacitor Detailed Analysis . . . 3

0.2.4 Supercapacitor Cell Selection . . . 4

0.2.5 Technology Selection Decision . . . 5

0.3 Electrical System Design . . . 7

0.3.1 System Architecture Overview . . . 7

0.3.2 Electrical Power Systems . . . 7

0.3.2.1 Pack Configuration & Power Distribution . . . 7

0.3.2.2 Safety & Protection Systems . . . 8

0.3.2.3 Grounding & EMI Architecture . . . 8

0.3.3 Electronic Monitoring & Control Systems . . . 8

0.3.3.1 Cell Voltage Monitoring . . . 9

0.3.3.2 Temperature Monitoring . . . 10

0.3.3.3 Current Sensoring & Pack Voltage Monitoring . . . 11

0.3.3.4 Power Management & Master Controller . . . 11

0.3.4 BMS . . . 11

0.3.5 System Integration & Validation . . . 11

0.3.5.1 Modular Interconnection Design . . . 11

0.3.5.2 Tolerance Analysis & Design Margins . . . 11

0.4 Mechanical Design and Packaging . . . 12
0.4.1 Segment Design . . . 12
0.4.2 Accumulator Container (AC) & Integration with Vehicle . . . 12
0.4.3 Manufacturing . . . 12
0.5 Design Verification and Validation . . . 13
0.5.1 Verification Approach . . . 13
0.5.2 Requirements Traceability and Compliance . . . 13
0.5.3 Analytical Verification . . . 13
0.5.4 Circuit Simulation Validation . . . 13
0.5.5 Benchmarking and Comparison . . . 13
0.5.6 Sensitivity Analysis . . . 13
0.5.7 Design Review and Expert Validation . . . 13
0.5.8 Recommendations for Physical Testing . . . 13
0.6 Results and Discussion . . . 14
0.6.1 Performance Metrics Summary . . . 14
0.6.2 Trade-Offs and Design Decisions . . . 14
0.6.3 Comparison with Alternative Designs . . . 14
0.7 Future Improvements & Conclusion . . . 15
0.7.1 Design Improvements . . . 15
0.7.2 Accumulator Conclusion . . . 15
0.8 Overall Conclusions . . . 16
.1 Technical Specifications . . . 17
.2 Calculations and Derivations . . . 17
.3 Test Data . . . 18
.4 Design Artifacts . . . 19

0.1 Introduction

In this report, I will present my findings for the design of an accumulator system for the Formula Student electric vehicle, for the theoretical scenario in which the acceleration event is the complete weighting of the competition. The report is structured into two main parts: a technical report detailing the design process and decisions, and a business and entrepreneurial analysis evaluating the commercial viability of the accumulator design.

0.1.1 Role of Accumulator

0.1.2 Design Assumptions and Target KPIs

0.1.3 Derived Technical Requirements

0.1.4 Project Scope

I will propose an accumulator system design which will encompass:

- Accumulator cells and pack architecture
- Accumulator Container (AC) mechanical design
- Accumulator Management System (AMS) electrical architecture
- High-voltage safety systems (contactors, fuses, IMD, interlocks)
- Thermal management strategy (integrated with electrical design)
- Performance simulation and verification

0.2 Technology Selection

0.2.1 Design Requirements and Selection Criteria

Due to the nature of the acceleration-only event, the primary design driver is peak power delivery rather than total energy capacity. This shifts the focus towards technologies with high power density. To best compare different energy storage technologies, the following selection criteria were established: (1) power output, (2) total energy capacity, (3) mass, (4) volume, and (5) price.

1. FS Rules regulate the maximum power output of the accumulator system at 80 kW (FS-EV 7.2.4 CHECK). We can assume constant max power output as Michael checked that the time when traction is an issue in our design is negligible compared to the total event (TODO: confirm with Michael)
2. To obtain total energy capacity requirements, I assumed the event duration of 3.5, with a conservative time of 4s. Total event duration was based on top performances in FS competitions, which our car should hopefully match or exceed, since we are designing the car purely for an acceleration-only event.

With these assumptions, we can simply calculate total power using: $E = P \cdot t$, giving $E = 80$ kW $\times$ 4 s $= 320$ kJ $= 89$ Wh. Then, we simply want to reduce the mass (3), volume (4) and price (5) of the accumulator system as much as possible to improve vehicle dynamics and value.

0.2.2 Energy Storage Media Survey

The next step is find the most suitable energy storage technology for our application. We can shortlist the technologies which has the lowest mass (the most imporant factor) for the required power and energy. Below is a table listing the energy and power density, and for our application the estimated weight by considering the limiting factor (either power or energy density).

Table 1: Comparative performance of electrochemical energy storage technologies. Values represent commercially available cell ranges [1, 2, 3, 4]. Minimum mass calculated for 80 kW power and 89 Wh energy requirements.

Technology	**Power Density (W/kg)**	**Energy Density (Wh/kg)**	**Limiting Density**	**Min. Mass (kg)**
Supercapacitor (EDLC)	1,000 – 15,000	5 – 10	Energy	8.9
Li-ion Capacitor (LIC)	2,000 – 10,000	10 – 20	Power	8.0
High-Power Li-Po	2,000 – 8,000	100 – 180	Power	10.0
Lithium Titanate (LTO)	3,000 – 5,100	50 – 80	Power	15.7
Lithium Iron Phosphate (LFP)	200 – 2,000	90 – 160	Power	40.0
Li-ion (NMC/NCA)	250 – 1,500	150 – 260	Power	53.3

From the table above, it is clear that the 3 main technologies which need to be further investigated are Supercapacitors, Li-ion capacitors and high-power Li-Po batteries, as they have the lowest mass for our application.

0.2.3 Supercapacitor Detailed Analysis

I first want to explore supercapacitors, and then compare them to Li-Po batteries later as a benchmark for top performance.

Supercapacitors store energy as charge electrostatically, allowing for very high power density and rapid charge/discharge cycles. The highest energy density supercapacitors are EDLCs (Electric Double Layer Capacitors). (TODO: either add source or table with different supercap chemistries and their properties)

$$E = \frac{1}{2}CV^2 = \frac{1}{2}C(V_{max}^2 - V_{min}^2) \tag{0.2.1}$$

Where E is energy in joules, C is capacitance in farads, and V is voltage in volts.

From Equation (0.2.1), it is clear that voltage sag has a large impact on usable energy capacity, and that we must consider voltage ranges. The upper limit is set by the maximum voltage allowed in FS-EV rules (600 V), while the lower limit is set by the inverter and motor minimum desirable voltage. With the motor selected by David, we can assume a minimum voltage of 400V (TODO: check with David and insert motor name and min voltage).

$$C = \frac{2E}{V_{max}^2 - V_{min}^2} = \frac{2 \cdot 320 \text{ kJ}}{600 \text{ V}^2 - 400 \text{ V}^2} = 3.2 \text{ F} \tag{0.2.2}$$

To achieve the required capacitance of 3.2 F at 600 V, we must connect multiple cells together. For equally rated cells, the total capacitance for series connections is given by:

$$C_{series} = \frac{C_i}{n} \tag{0.2.3}$$

Where C_i is the individual cell capacitance, and n is the number of cells in series or parallel.

So for our design, assuming cell voltage of 3 V, we need 200 cells in series to reach 600 V. Then, to achieve the required capacitance of 3.2 F, we need 640F cell capacitance.

Another key paramter is the Equivalent Series Resistance (ESR), which for many supercapacitors in series becomes an important cell consideration. The total voltage sag under load can be calculated as:

$$V_{sag} = I_{peak} \cdot ESR_{total} = \frac{P}{V_{min}} \cdot ESR_{cell} \cdot n \tag{0.2.4}$$

Where I_{peak} is the peak current drawn from the pack, and ESR_{total} is the total ESR of the pack equal to the cell ESR multiplied by the number of cells, n.

0.2.4 Supercapacitor Cell Selection

Table 2: Commercial supercapacitor cell comparison for FS application. Specifications from manufacturer datasheets. Cell count, total capacitance, and voltage sag calculated for 600 V pack with 80 kW peak power at 400 V minimum.

ID	Part Number	Cap. (F)	Volt. (V)	ESR (mΩ)	Cell Mass (kg)	Cells (n)	Total Mass (kg)	Total Cap. (Eq. 0.2.3) (F)	Volt. Sag (Eq. 0.2.4) (V)
SC1	C46W-3R0-0600	600	3.0	0.70	0.139	200	27.8	3.0	28.0
SC2	C35S-3R0-0600	600	3.0	1.40	0.104	200	20.8	3.0	56.0
SC3	CHQ-3R0607R-TW	600	3.0	1.30	0.135	200	27.0	3.0	52.0
SC4	SCCY1KB707SLBLE	700	2.7	1.30	0.163	223	36.3	3.14	58.0
SC5	SCCY83B607SLBLE	600	2.7	1.60	0.135	223	30.1	2.69	71.4

Initially, SC3 was considered the best option, striking a good balance between mass and necessary capacitance, whilst also providing easy segmnetation with its standard cell voltage of 3V. Then, further investigation into other suppliers revealed SC2 to be a lower mass option. However, when considering the voltage sag under load, SC1 was ultimately selected due to its significantly lower ESR, even if this came with a significant mass penalty.

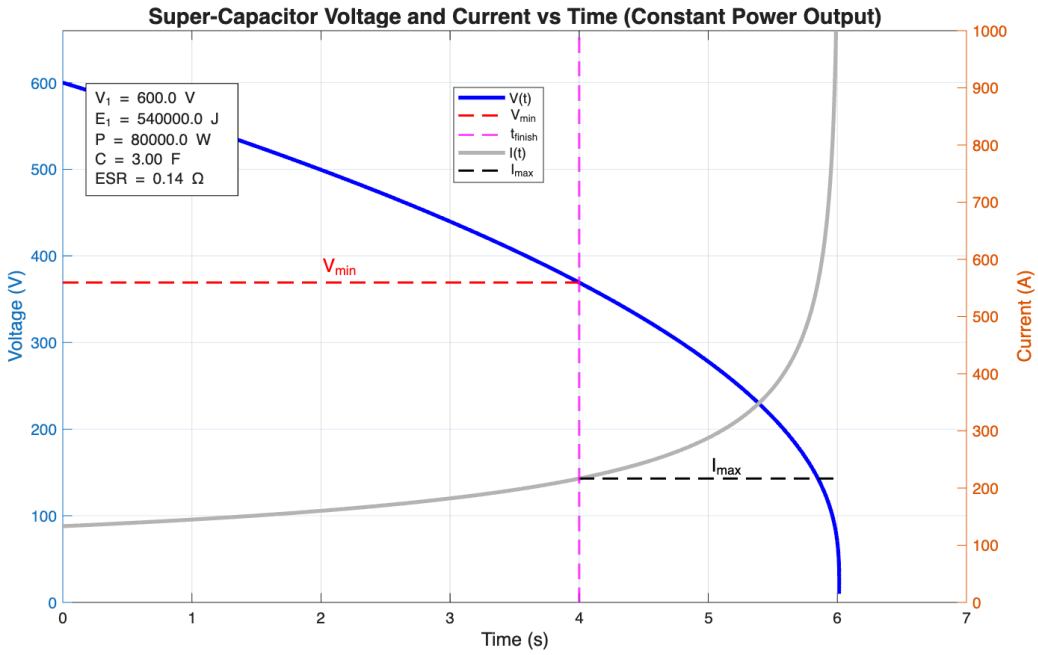

Figure 1: Selected supercapacitor (SC1) discharge characteristics showing both voltage and current over time during a constant power discharge of 80 kW.

0.2.5 Technology Selection Decision

In this section, I want to compare the 3 different technologies (EDLC, Li-Po and LIC) based on their mass, volume, price, performance and availability.

Li-io Capacitors (LIC) have major availability issues, and data is not publically avaialable on cells built for such an application. Since this is a design project, and I cannot source reliable test data. Furthermore, their voltage mass cell density is actually worse than EDLC supercapacitors, even if their energgy is considerably better. To achieve 600V, one must use a DC-DC converter, but the added weight would lead to the overall mass becoming similar as before, whilst also drastically increasing complexity. For these reasons, I have decided to not consider LICs further in this report.

High-power Li-Po batteries are already utilised widely within Formula Student for top perfoming teams. With this in mind, I decide that the best approach would be to use best-in class Li-Po cells as a benchmark for supercapacitor performance.

First, I want to consider the easily quantifiable metrics of mass, volume and price. I employed a weighted scoring system using the following equation:

$$\text{Score} = \frac{\text{Best Value in Category}}{\text{Component Value}} \cdot \text{Weight}$$

Table 3: Comparison of EDLC supercapacitor and high-power Li-Po battery technologies for acceleration-only application. Weighted scoring system applied with mass (3×), price (2×), and volume (1×) weightings.

Technology	**Cell Component**	**Total Mass (kg)**	**Price**	**Volume (L)**
EDLC Cap.	C46W-3R0-0600	27.80	£4,000	38.70
LiPo Battery	Melasta SLPB9145180	40.00	£5,500	22.00

Weighted Scoring Analysis				
Metric	**Weighting**	**EDLC Score**	**LiPo Score**	**Best**
Total Mass	3×	3.00	2.09	EDLC
Price	2×	2.00	1.45	EDLC
Volume	1×	0.57	1.00	LiPo
Total Score		**5.57**	**4.54**	**EDLC**
			EDLC Advantage:	**+22.7%**

The performance of supercapacitors due to non-negligible voltage sag is important to analyse. Using figure 1, we can see that the final voltage under load is approximately 370V for a conservative 4s peak discharge. However, the inverter and motor can handle this voltage (TODO: confirm with David to see actual performance loss). The increased current drawn at lower voltages will increase temperature rise, but this is still comfortably within acceptable limits (TODO: add an equation confirming this). On the other hand, supercapacitors have a significant advantage in cycle life (1,000,000 cycles) and charge rate (charge time is equal to discharge time). Critically, they deliver consistent performance over their lifetime and for each run, unlike Li-Po batteries.

Taking both quantifiable and performance metrics into account, I have decided to select EDLC supercapacitors for the accumulator design, as they provide a significant mass and price advantage whilst providing consistent performance.

0.3 Electrical System Design

0.3.1 System Architecture Overview

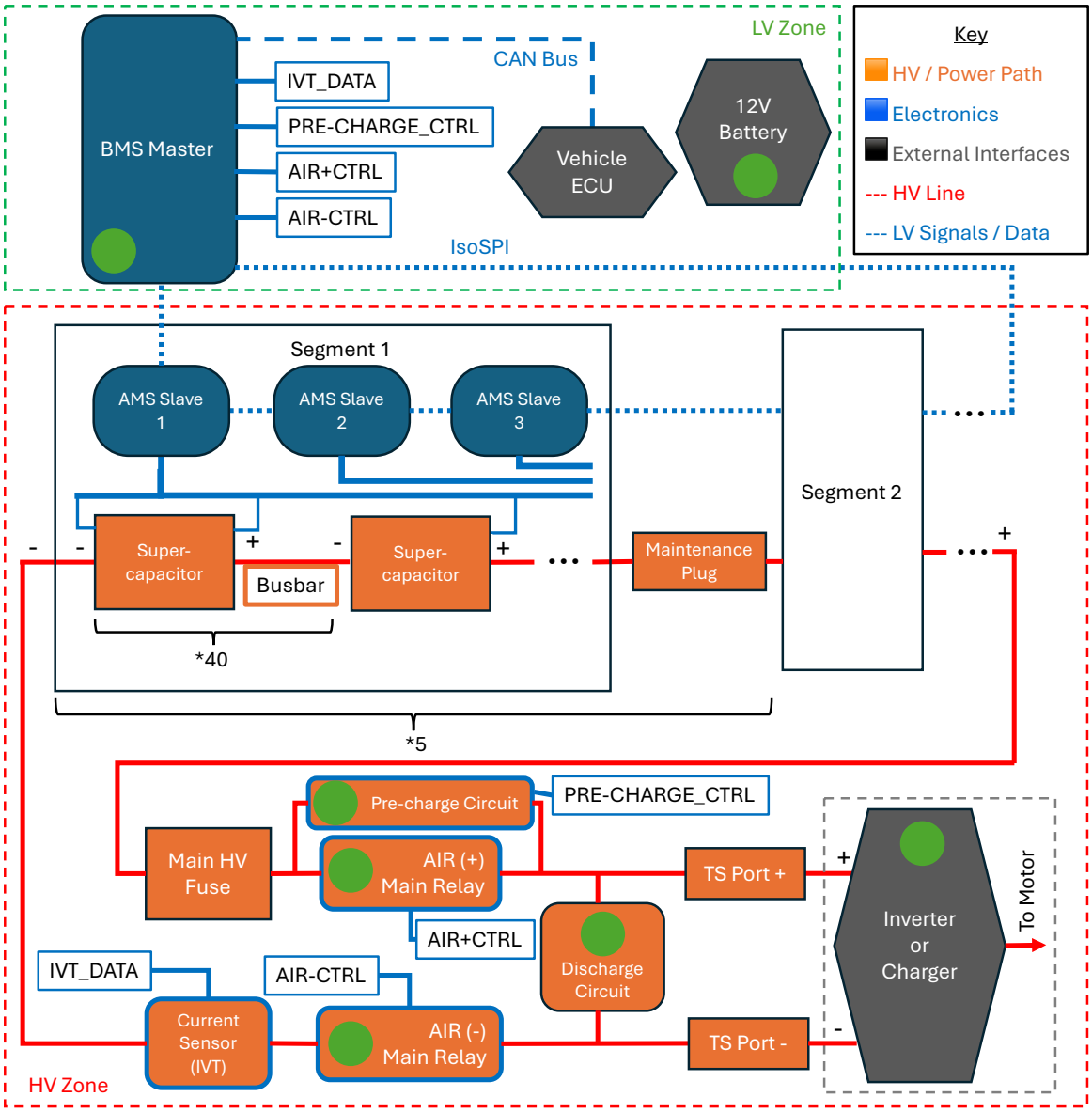

Figure 2: Top-level electrical system architecture showing energy flow from supercapacitor cells through busbars and segments to the inverter, alongside control and communication pathways within the AMS.

0.3.2 Electrical Power Systems

0.3.2.1 Pack Configuration & Power Distribution

For thermal reasons outlined here (TODO: insert reference to segment design in mechanical section), the supercapacitors need to be connected via busbars, rather than directly welded in series terminal to terminal. The busbar design material needs to minimise $\rho_e \cdot \rho_m$, where ρ_e is the electrical resistivity and ρ_m is the mass density of the busbar material. Copper is generally considered

the best material, but for supercapacitors with aluminium terminals, aluminium 1005 busbars provide a metallurigically compatible connection. Laser or ultrasonic welding (TODO: confirm which one is available at Oxford) can be used. If we maximise busbar connection area to the terminal area (with diameter, $d_t = 10$mm), specify the average busbar length as equal to the diameter of the supercapacitor with some clearance ($L \approx 50$mm), and set a target resistance to $0.1\text{m}\Omega$ (since $ESR = 0.7\text{m}\Omega$, we can calculate the required thickness of a single busbar connection as:

$$t = \frac{\rho_e L}{R d_t} = 1.41 \text{ mm} \approx 1.45 \text{ mm (standard 15 gauge)}$$

0.3.2.2 Safety & Protection Systems

0.3.2.3 Grounding & EMI Architecture

0.3.3 Electronic Monitoring & Control Systems

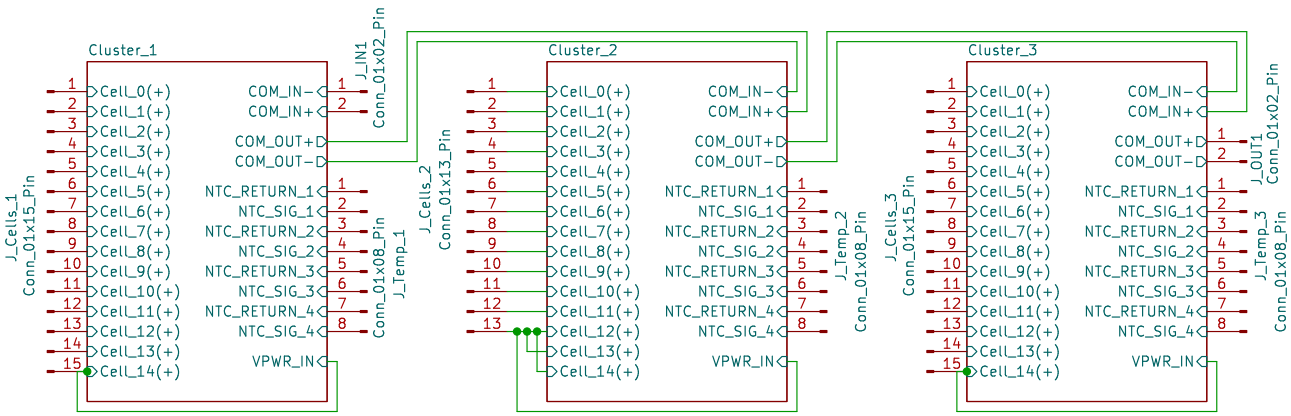

Figure 3: Complete segment AMS PCB schematic showing MAX17853 configuration, voltage sensing circuits, and cell balancing topology for 40-cell segment monitoring.

Power Supply: The controller IC is powered directly by the cell stack it monitors via the `VPWR` pins, "floating" at the local potential of the segment. **Safety Compliance:**

- **Open Wire Detection:** The chip utilizes internal current sources to immediately detect if a voltage tap disconnects.
- **Redundancy:** Includes secondary internal voltage references to verify ADC accuracy, supporting ISO 26262 ASIL-C/D safety requirements.

Daisy Chain Logic: The schematic implements the specific pin mapping for TPL communication, receiving data via `COM_IN` (from the lower segment) and transmitting via `COM_OUT` (to the higher segment).

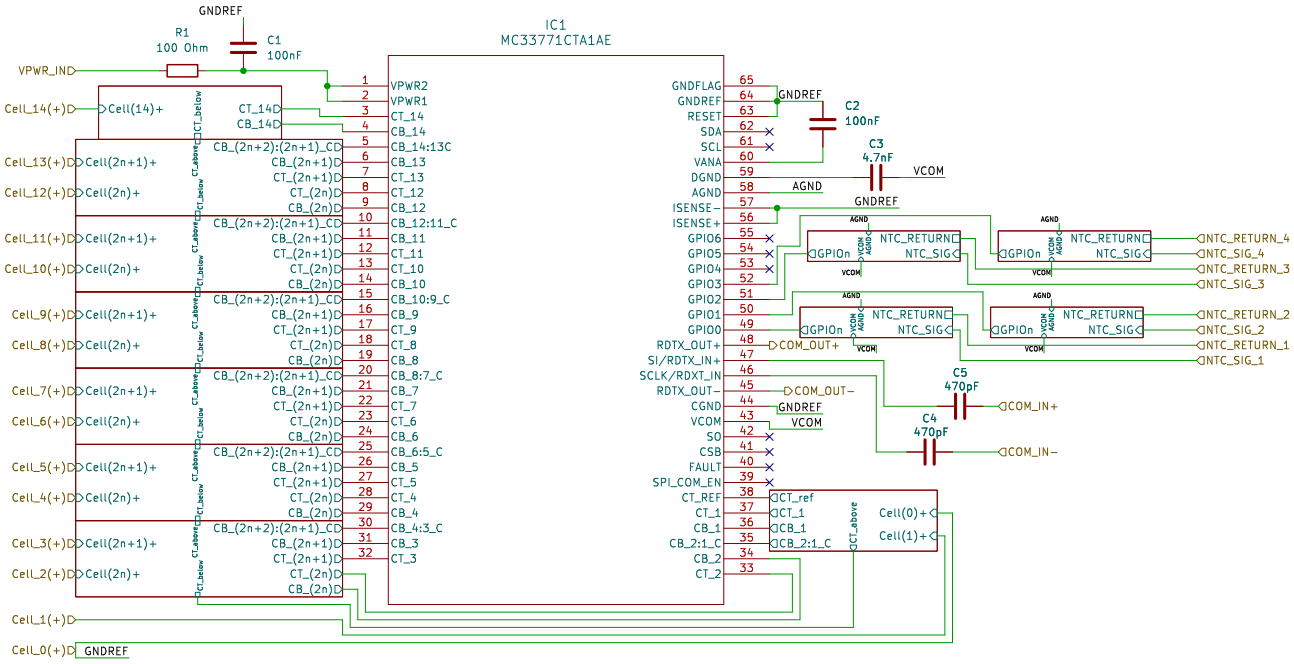

Figure 4: Power Management IC (PMIC) circuit providing regulated power supply to the AMS electronics from the high-voltage pack with isolation and protection features.

Topology: Implements a scalable "Master-Slave" architecture using NXP MC33771 battery cell controllers, supporting modular expansion across all 5 accumulator segments. **Communication Interface:** Utilizes NXP's TPL (Twisted Pair Link) differential protocol. This current-mode transmission method provides high immunity to electromagnetic interference (EMI) generated by the tractive system inverter. **Galvanic Isolation:**

- Daisy-chain communication links are bridged by **470pF High-Voltage Safety Capacitors** ($C4, C5$).
- These capacitors maintain the isolation barrier between stacked voltage domains (e.g., separating Segment 1 at 0–60V from Segment 2 at 60–120V) while blocking DC high voltage.

Layout Strategy: Signal traces for `COM_IN` and `COM_OUT` are routed as differential pairs with $100\,\Omega$ impedance matching to preserve signal integrity.

0.3.3.1 Cell Voltage Monitoring

Anti-Aliasing Filter Design:

- Components: $R = 100\,\Omega$, $C = 47$ nF.
- The cutoff frequency f_c is calculated to reject high-frequency switching noise from the inverter

(typically 8–16 kHz harmonics):

$$f_c = \frac{1}{2\pi RC} = \frac{1}{2\pi(100)(47 \times 10^{-9})} \approx 33.8\,\text{kHz}$$

Passive Balancing Calculations:

- Mechanism: Dissipative balancing is achieved via switchable resistors ($R_{bal} = 33\,\Omega$).
- **Balancing Current:** At a nominal maximum cell voltage of 4.2V:

$$I_{bal} = \frac{V_{cell}}{R_{bal}} = \frac{4.2\,\text{V}}{33\,\Omega} \approx 127\,\text{mA}$$

- **Power Dissipation:** To determine the required component package size:

$$P_{diss} = I_{bal}^2 \times R_{bal} = (0.127)^2 \times 33 \approx 0.53\,\text{W}$$

- **Constraint:** This dissipation necessitates the use of **1210 or 2010 package resistors** (rated for > 0.75W) to ensure thermal stability during balancing cycles.

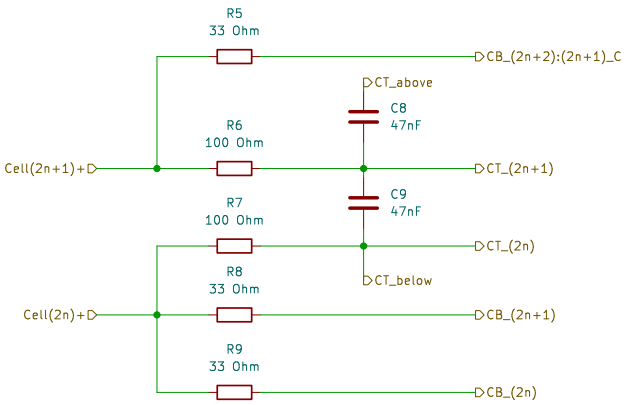

(a) Middle filter circuit for noise suppression and signal conditioning in the AMS communication and sensing lines, ensuring accurate voltage and temperature measurements.

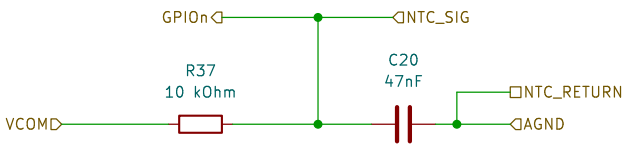

(b) Temperature sensing circuit with NTC thermistor placement strategy and conditioning circuitry for monitoring 30% of cells per FS-EV requirements.

Figure 5: Signal conditioning circuits for AMS monitoring

0.3.3.2 Temperature Monitoring

Signal Conditioning: Inputs are protected by an RC noise filter ($R = 10\,\text{k}\Omega$, $C = 47\,\text{nF}$) to prevent voltage spikes from triggering spurious over-temperature faults. **Measurement Logic:** NTC thermistors connect directly to the MC33771 GPIO pins. The controller digitizes the voltage ratio

to compute cell temperature. **Safety Trigger:** The system is configured to trigger a hard fault and de-energize the AIRs if any cell temperature exceeds the safety threshold ($T > 60°$C).

0.3.3.3 Current Sensoring & Pack Voltage Monitoring

0.3.3.4 Power Management & Master Controller

0.3.4 BMS

0.3.5 System Integration & Validation

0.3.5.1 Modular Interconnection Design

0.3.5.2 Tolerance Analysis & Design Margins

0.4 Mechanical Design and Packaging

Due to the electrical requirement of 200 cells in series, the accumulator will be split into 5 segments of 40 cells each to comply with FS-EV rules regarding maximum voltage per segment (TODO: insert reference to FS-EV rule). Each segment will be housed within the Accumulator Container (AC), separated by an inner wall and electrically with a maintenance plug.

0.4.1 Segment Design

The first step is to design a replicable segment design. Each segment will contain 40 cells connected in series, with cell holders to ensure secure mounting and electrical isolation.
Due to welding considerations, each cell must be separated by a busbar (and not simply like a typical AA battery connected in series), to prevent mechanical stress on the cell with thermal expansion. This leads to a more complex wiring harness, but is necessary for safety and reliability.
Packing density is maximised by arranging cells in a honeycomb pattern compared to a simpler rectangular pattern. However, further analysis showed that due to the uneven endings of the honeycomb arrangement, the overall volume was only reduced by 1% (TODO: insert reference to work here), so a rectangular arrangement was selected for simplicity of manufacturing.
Each segment is best split into 2 modules of 20 cells each, both 5*4 cells in a rectangular arrangement. With this arrangement, the segment becomes an easily packaged cubiod shape.
The CAD model considered the spacing for the thermal and voltage sensors, and the complementary circuit board placed at the top.

0.4.2 Accumulator Container (AC) & Integration with Vehicle

The final agreed upon arrangement of the vehicle is shown below (TODO: add CAD image). The accumulator is placed with its 5 seperate segments

0.4.3 Manufacturing

0.5 Design Verification and Validation

0.5.1 Verification Approach

0.5.2 Requirements Traceability and Compliance

0.5.3 Analytical Verification

0.5.4 Circuit Simulation Validation

0.5.5 Benchmarking and Comparison

0.5.6 Sensitivity Analysis

0.5.7 Design Review and Expert Validation

0.5.8 Recommendations for Physical Testing

0.6 Results and Discussion

0.6.1 Performance Metrics Summary

0.6.2 Trade-Offs and Design Decisions

0.6.3 Comparison with Alternative Designs

0.7 Future Improvements & Conclusion

0.7.1 Design Improvements

0.7.2 Accumulator Conclusion

0.8 Overall Conclusions

.1 Technical Specifications

.2 Calculations and Derivations

.3 Test Data

.4 Design Artifacts

References

[1] Thomas B. Reddy. *Linden's Handbook of Batteries*. 4th. Primary source for Pb-acid, NiMH, and general Li-ion ranges. McGraw-Hill Education, 2011.

[2] Yu Miao et al. "Current Li-Ion Battery Technologies in Electric Vehicles and Opportunities for Advancements". In: *Energies* 12.6 (2019). Source for LTO, LFP, and NMC comparisons, p. 1074.

[3] Noshin Omar et al. "Lithium ion capacitor: A review of technology and thermal behaviors". In: *International Journal of Energy Research* 38.12 (2014). Source for Li-ion Capacitor (LIC) specific data, pp. 1529–1542.

[4] Unmanned Systems Technology. *High-Capacity Batteries for Drones & Robotics: Technology Review*. `https://www.unmannedsystemstechnology.com`. Source for High-Discharge Li-Po (Drone) performance data. 2024.