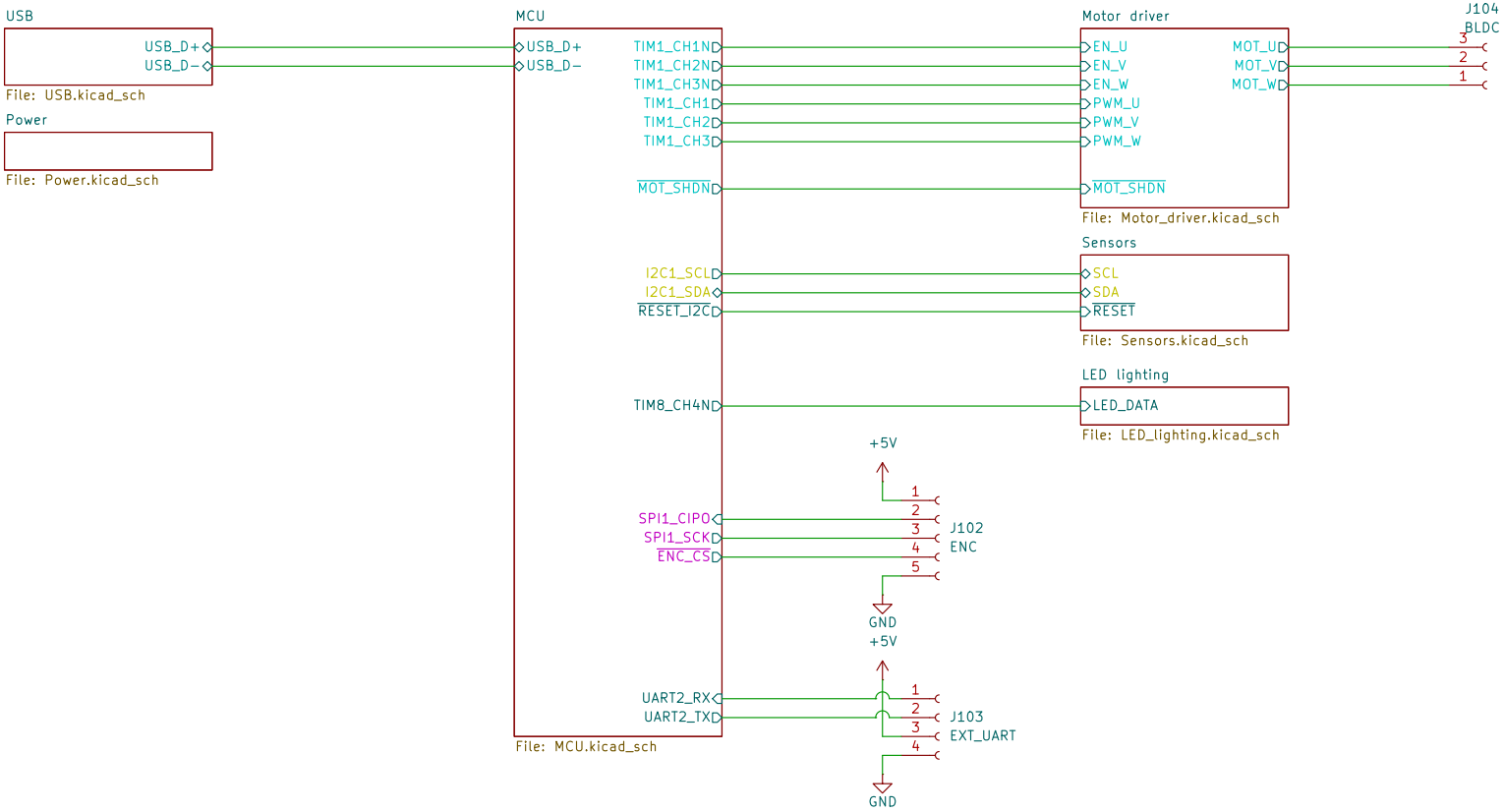

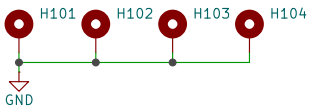

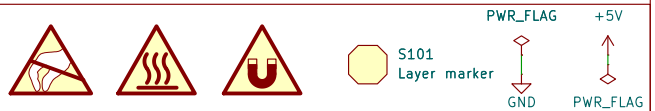

Author: Emiel V

Sheet: /

File: HaptiCAD_base.kicad_sch

Title: Base

Size: A4	Date: 2026-03-16	**Rev: V0.1**
KiCad E.D.A. 10.0.0-88-g866e5998e5		Id: 1/7

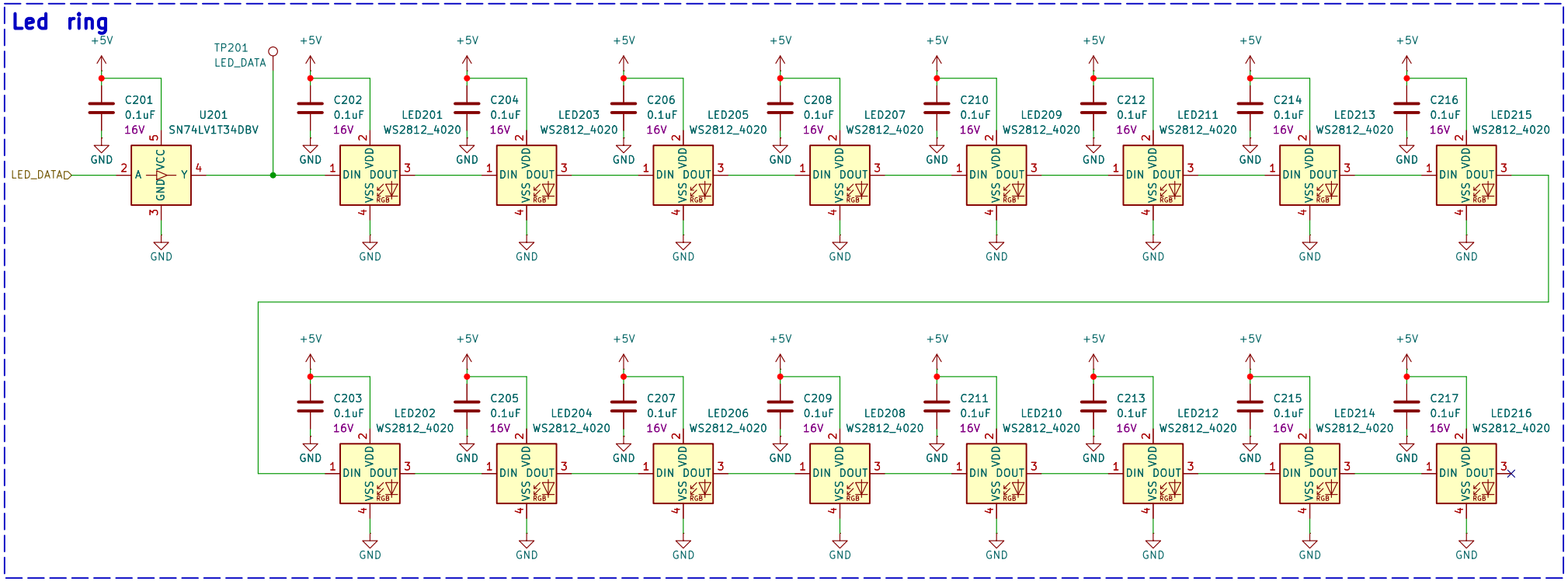

Author: Emiel V

Sheet: /LED lighting/

File: LED_lighting.kicad_sch

Title: LED

Size: A4	Date: 2026-03-16	**Rev: V0.1**
KiCad E.D.A. 10.0.0-88-g866e5998e5		Id: 2/7

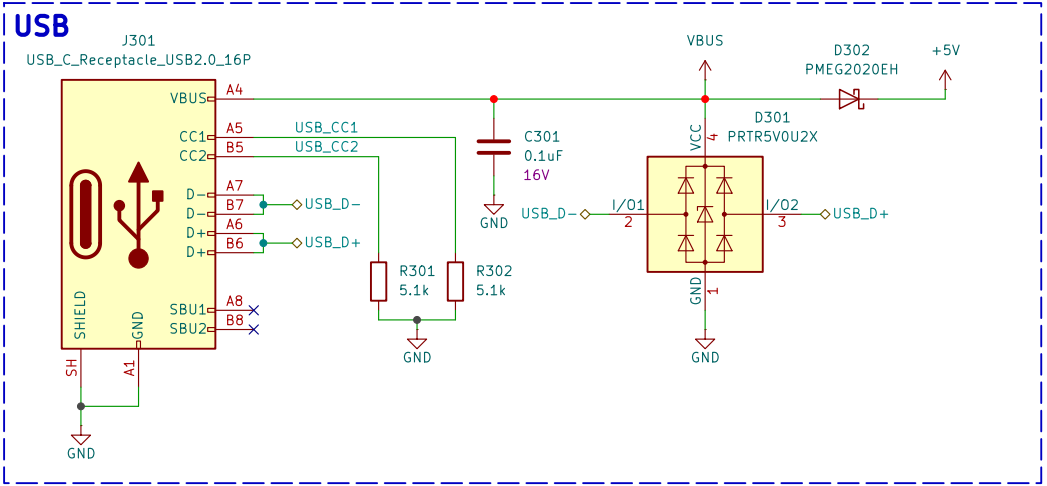

Author: Emiel V

Sheet: /USB/

File: USB.kicad_sch

Title: USB

Size: A5	Date: 2026-03-16	**Rev: V0.1**
KiCad E.D.A. 10.0.0-88-g866e5998e5		Id: 3/7

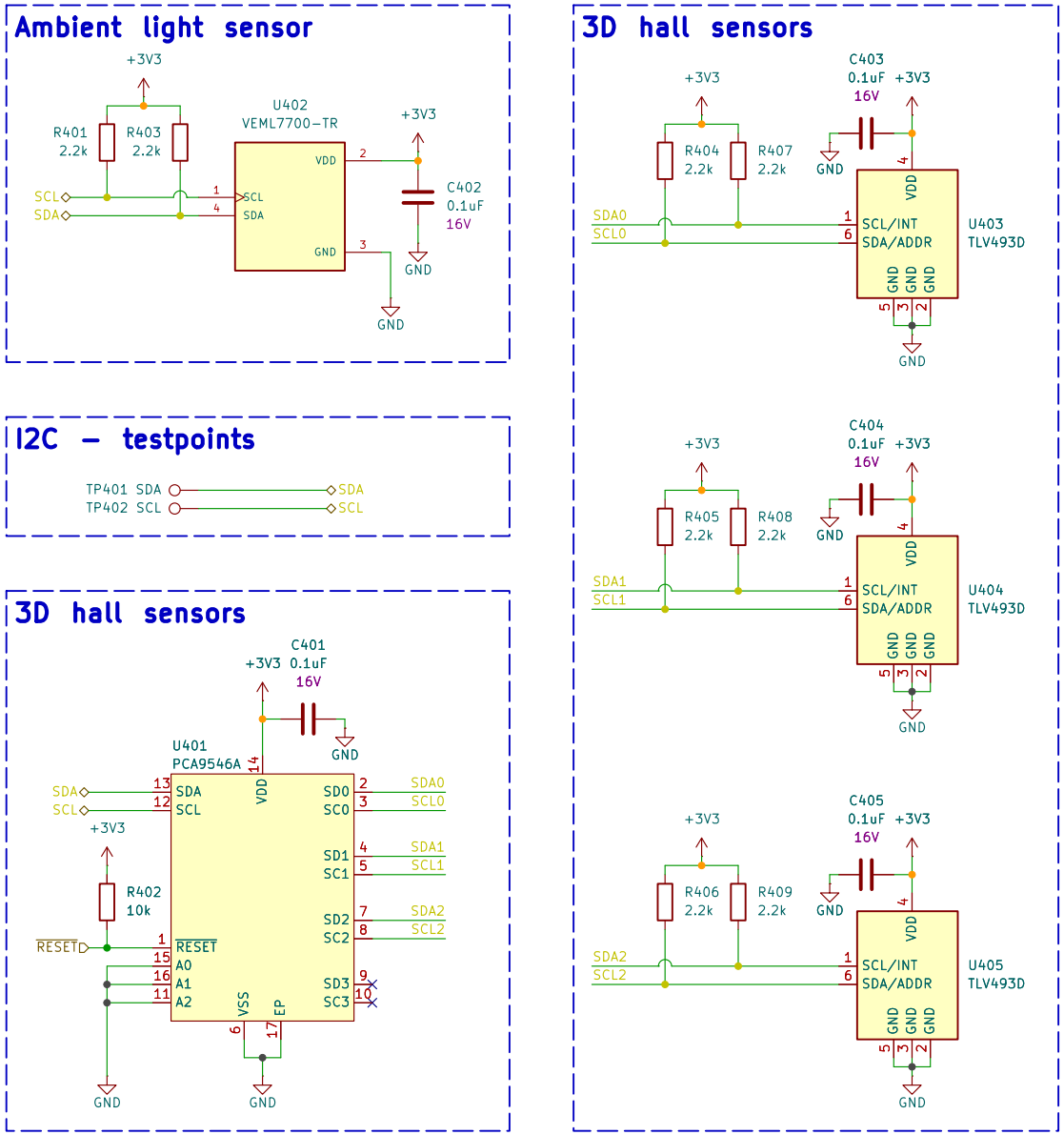

Author: Emiel V

Sheet: /Sensors/

File: Sensors.kicad_sch

Title: Sensors

Size: A4	Date: 2026-03-16	**Rev: V0.1**
KiCad E.D.A. 10.0.0-88-g866e5998e5		Id: 4/7

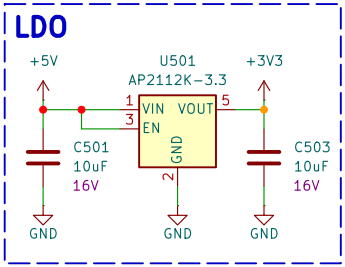

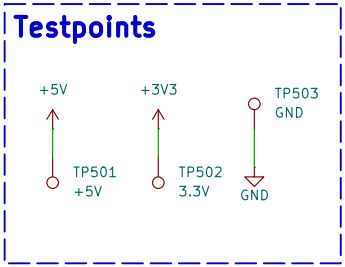

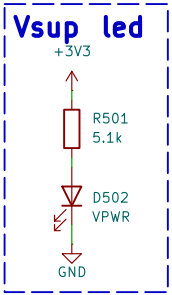

VMOT

PWR_FLAG

Author: Emiel V

Sheet: /Power/

File: Power.kicad_sch

Title: Power

Size: A5	Date: 2026-03-16	**Rev: V0.1**
KiCad E.D.A. 10.0.0-88-g866e5998e5		Id: 5/7

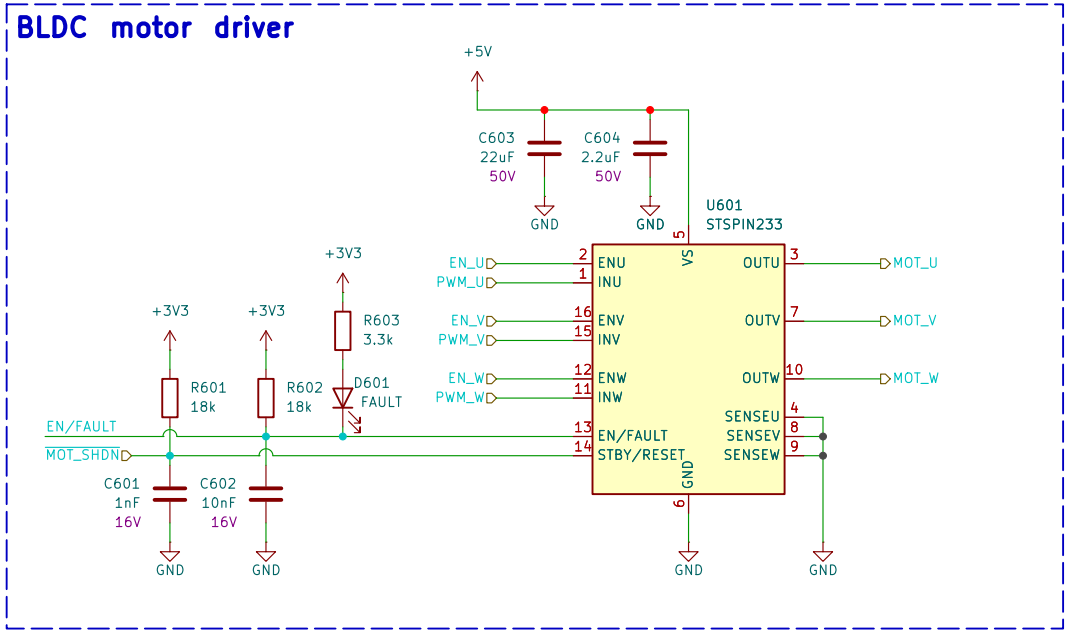

Author: Emiel V

Sheet: /Motor driver/

File: Motor_driver.kicad_sch

Title: BLDC motor driver

Size: A4	Date: 2026-03-16	**Rev: V0.1**
KiCad E.D.A. 10.0.0-88-g866e5998e5		Id: 6/7

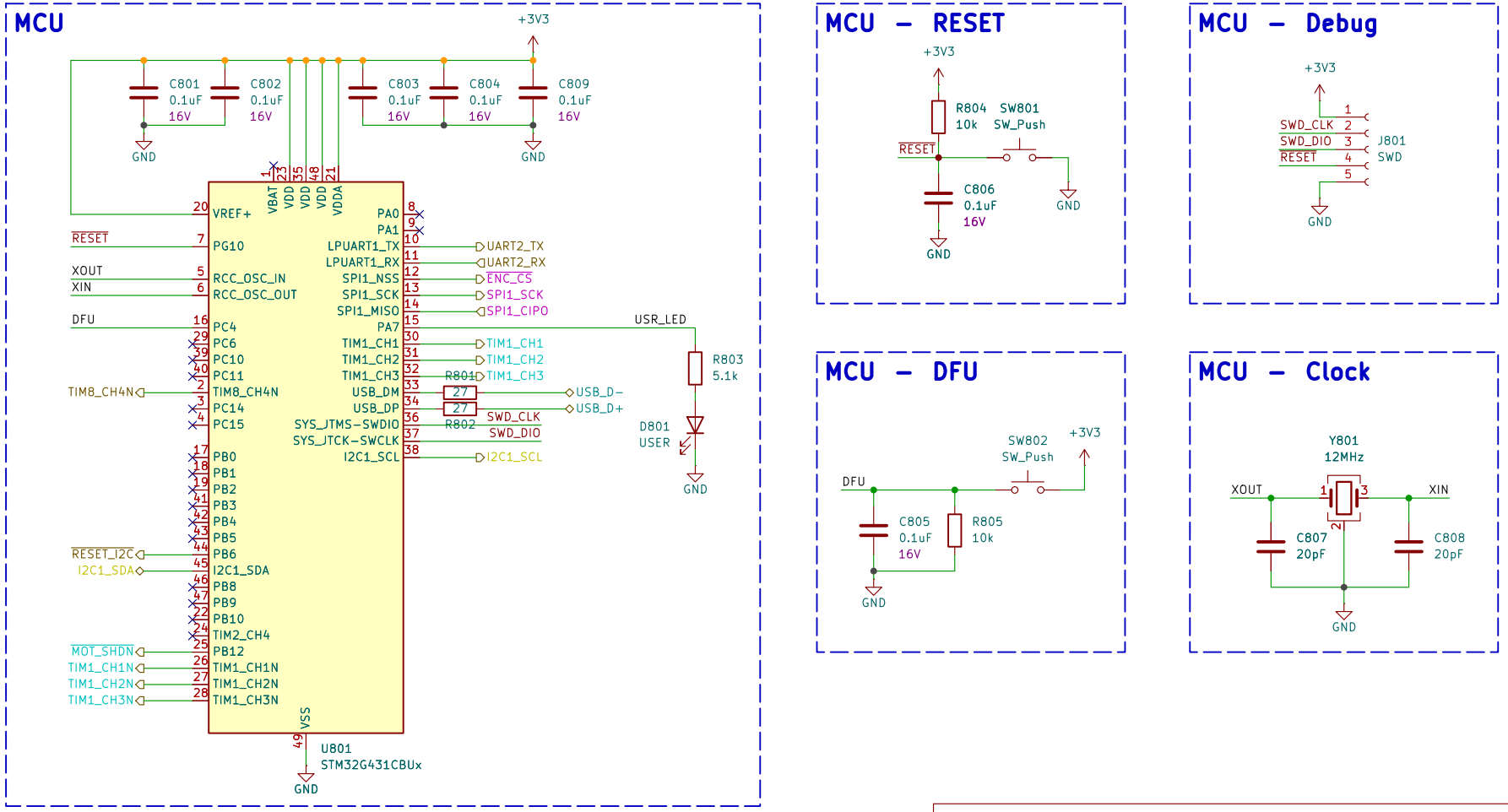

Author: Emiel V

Sheet: /MCU/

File: MCU.kicad_sch

Title: MCU

Size: A4	Date: 2026-03-16	**Rev: V0.1**
KiCad E.D.A. 10.0.0-88-g866e5998e5		Id: 8/7