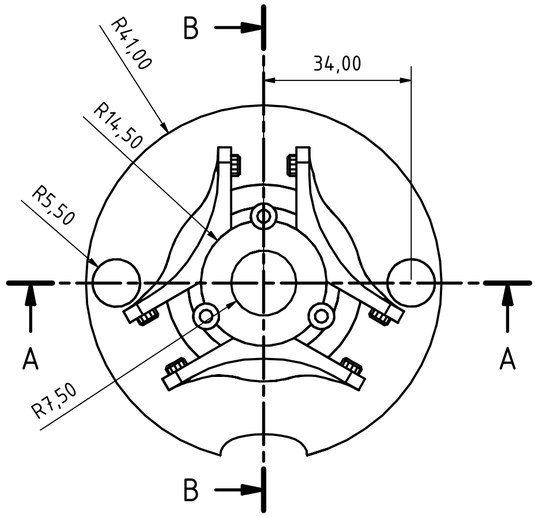

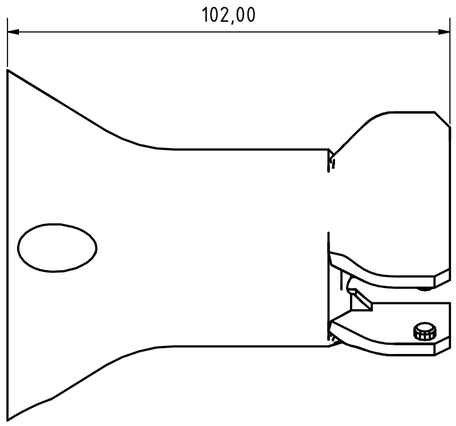

B-B (1 : 1)

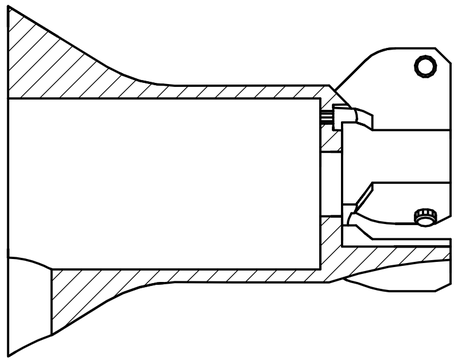

A-A (1 : 1)

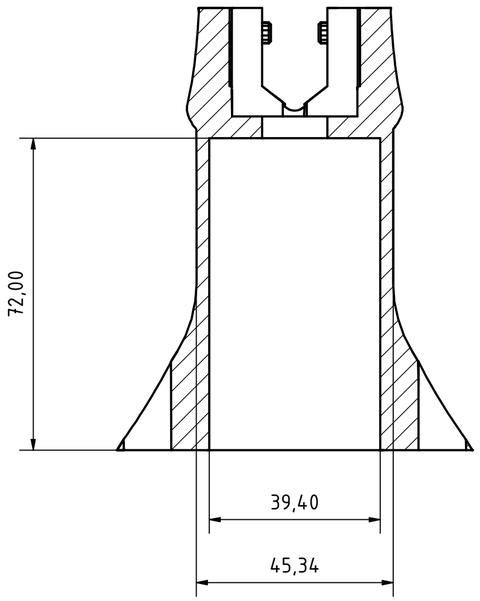

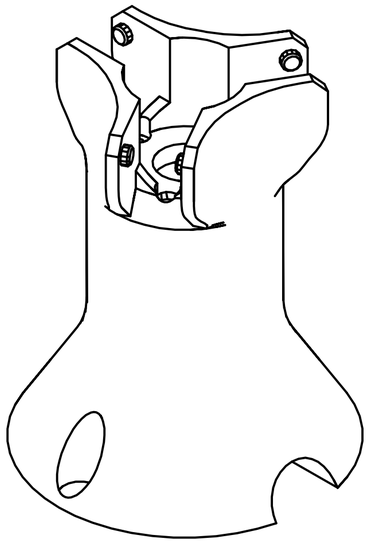

					Date	Name
				Drawn	23-05-2025	Marcu
				Checked		
				Standard		
State	Changes	Date	Name			

Motor_housing

1

A2