Energy: Introduction

February 7, 2025

1 Background

1.1 Where are we now?

Wow, we now have Newton's laws for both translation and rotational motion, and they describe *everything*. In classical, "normal", physics at least, this is no joke. Newton's laws are complete![1] You should give yourself a pat on the back.

That said, while Newton's laws do provide a physically accurate and *complete* description of the world, they are not always the *most convenient* description. The following example will illustrate what I mean:

> We throw two balls down a slope from the same starting point, ignoring air resistance. Ball A is thrown at an angle of 45° upwards. The second ball, B, is thrown with the same speed, but now at an angle of 45° downward (see figure 1). Which ball has the greatest speed when it hits the ground? (Norwegian Physics Olympiad 2022)

Task 1: Solve the problem above using Newton's laws (this will involve quite a bit of algebra!).

If you solve this using Newton's force laws (and do it correctly) you will get the right answer. However, it is tedious. The reason for this is that you are also solving for and finding a bunch of other stuff that you are not actually interested in for solving the actual question. You are finding the velocity of the ball at every given point in time (or space), when all you wanted to know was the speed of the two balls when they hit the ground. You may find this reminiscent of the system of equations that we looked at in the handout on geometric force techniques (in that case, finding all the variables when all you wanted was the sum). Similar to that system of equations, the fact that we are solving for more than we strictly need to answer the question suggests that there is a trick somewhere.

1.2 Introducing Energy

To find this trick, we should go back to the question and think about what we really want to find. The question is asking us about finding the *speed* of each ball, at a given *position* (a given height of 0 above the ground, in this case). Hence, we would really like to find a relationship that tells us what the speed of a particle is at any given point in space. This is different from Newton's laws, which tells us how the velocity (and hence the speed) of an object will change at any given time. While we can find the former from the latter, we would like to find a general expression from the former, to avoid all the unnecessary algebra. To do this, let's start with Newton's 2nd law (for simplicity, we will consider only one dimension, but the generalization to 3D is straightforward if you know simple vector calculus).

$$F = m\frac{d^2x}{dt^2}$$

where acceleration $a = \frac{d^2x}{dt^2}$ (second time derivative of the position). Since we want to switch from looking at changes with time (t) to changes with space (x), let's add an infinitesimal dx, and do some clever rearranging:

[1] When you delve into relativity and quantum mechanics, you will see that Newton's laws are unfortunately, not everything.

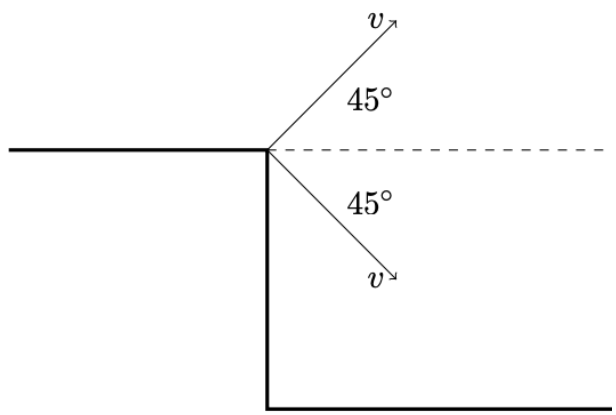

Figure 1: Throwing balls down slope

$$Fdx = m\frac{d^2x}{dt^2}dx \tag{1}$$
$$Fdx = m\frac{dv}{dt}dx \tag{2}$$
$$Fdx = mdv\frac{dx}{dt} \tag{3}$$
$$Fdx = mvdv \tag{4}$$
$$Fdx = \frac{m}{2}d(v^2) \tag{5}$$
$$\frac{m}{2}d(v^2) - Fdx = 0 \tag{6}$$
$$\tag{7}$$

where we have used $v = \frac{dx}{dt}$ in step 1 and 3, and shuffled around the derivatives as fractions in step 2 (a classic physicist's trick!). In step 4, we cleverly observed that $d(v^2) = 2vdv$, which allowed us to make a substitution. If you are unfamiliar with this technique of working with differnetials, and plan on doing a lot of olympiad physics (and physics in general) I would strongly recommend learning it, but it is not strictiyl necessary for understanding the rest of this handout.

With our current expression, we can now integrate it along a path in space. To clarify what this means, we are now integrating along the particle's/body's motion on the x-axis, and integrating over both the force F and the velocity squared v^2 (see figure **??**). Doing this, we get:

$$\frac{m}{2}d(v^2) - Fdx = 0 \tag{8}$$
$$\frac{mv^2}{2} + V(x) = E \tag{9}$$

Where E is the constant of integration and we have defined $F = -\frac{dV}{dx}$, or equivalently $V(x) = \int_{x_0}^{x} Fdx'$[2], where x_0 and x are the start and end points.

Look familiar? This is the expression of conservation of (mechanical) energy, straight from Newton's laws! We call the term $T = \frac{mv^2}{2}$ the *kinetic energy*, since it is associated with the speed, or the movement of

[2]Note that the difference between the similar looking x's here. x_0 is our "starting point" (a fixed point that we can pick), and x is the "final point" of our path, and the point atwhich we are calculating the potential. x' is the integration variable, and will vary as we are integrating over the path.

the particle, and the term $V(x)$ which is only a function of the position of the particle. For a given system must always sum to a constant number, E, the energy.

This means that we have found exactly what we wanted, a relationship that binds together the speed and the position of a particle. We can now go ahead and solve our first question handily (you will get to do so in section 2.2 below).

The relationship we derived is tremendously general, and will end up being extremely useful. Even though it encodes no "new" information compared to Newton's laws, it is oftentimes much simpler to solve physical system by considering just the energy, and not any forces. You will try your hand at this in this handout.

1.3 Some common potentials

Before we solve questions, we should expand a little bit on this mysterious term, the potential, $V(x)$. How do we find it? Well, it will vary for different systems, but let's consider it for the two systems we are familiar with: a constant gravitational field and a spring.

1.3.1 Constant graviational field

In a constant gravitational field (such as that on and close to Earth's surface), the force $F = -mg$, where m is the mass of the body and g is the gravitational acceleration constant. Using our definition of $V(x)$ form above, we find V from F :

$$V(x) = -\int_{x_0}^{x} F dx' \tag{10}$$

$$V(x) = \int_{x_0}^{x} mg dx' \tag{11}$$

$$V(x) = mg(x - x_0) \tag{12}$$

As we will see time and time again, the choice of starting point x_0 is arbitrary since we only ever care about differences in potential. Hence, we can pick a starting point that will give nice, simple equations. A common choice is to pick x_0 to be the ground on Earth, meaning that $x - x_0 = h$, where h is the height above the ground. Thus:

$$V(h) = mgh$$

1.3.2 Spring

For a spring, $F = -kx$. Hence:

$$V(x) = -\int_{x_0}^{x} F dx' \tag{13}$$

$$V(x) = \int_{x_0}^{x} kx' dx' \tag{14}$$

$$V(x) = \frac{kx'^2}{2}\Big|_{x_0}^{x} \tag{15}$$

$$V(x) = \frac{k(x^2 - {x_0}^2)}{2} \tag{16}$$

Again, we can pick x_0 as we wish, and a good choice is to pick $x_0 = 0$[3], and we get:

$$V(x) = \frac{kx^2}{2}$$

[3] In actuality, this means we are setting x_0 to be the natural extension of the spring, and not 0. The details are not so important.

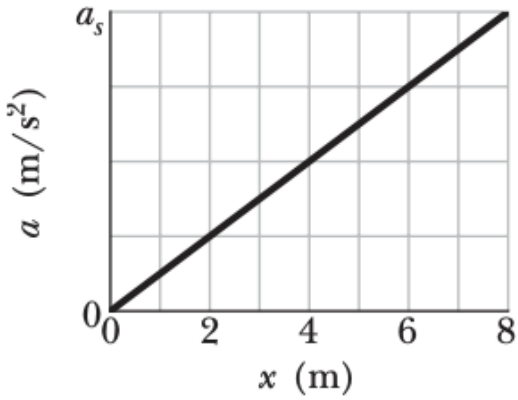

Figure 2: Graph of accelerating brick

1.4 Olympiad applications

What does this mean for solving problems? When starting out as a young physics olympiad, knowing when to attack a problem using forces or energy is, and I don't have a lot of good answers to give here apart from: practice solving problems! You will be amazed at how quickly your brain learns the complex pattern matching to understand when to use which technique. In this handout, most of the problems will introduce you to thinking about and applying energy to solve introductory olympiad problems. In the next handout, we will go through more complex problem solving with energy.

2 Questions

2.1 Check your understanding

1. A ball is thrown vertically upwards. Sketch a graph of
   (a) the kinetic energy of the ball against time.
   (b) the potential energy of the ball against time
   (c) the total energy of the ball against time

   (Adapted from Norwegian Physics Olympiad 2019)

2. A father racing his son has half the kinetic energy of the son, who has half the mass of the father. The father speeds up by 1.0 m/s and then has the same kinetic energy as the son. What are the original speeds of (a) the father and (b) the son? (Halliday & Resnick)

3. A 10 kg brick moves along the x-axis. Its acceleration as a function of its position is shown in figure 2. The scale of the figure's vertical axis is set by as 20.0 m/ s^2. What is the net work performed on the brick by the force causing the acceleration as the brick moves from $x = 0$ to $x = 8.0$ m?

2.2 Trying out the waters

4. We throw two balls down a slope from the same starting point, ignoring air resistance. Ball A is thrown at an angle of 45° upwards. The second ball, B, is thrown with the same speed, but now at an angle of 45° downward (see figure 1). Which ball has the greatest speed when it hits the ground? (Norwegian Physics Olympiad 2022)

5. A small ball of mass m is placed on top of a larger ball of mass $4m$. The balls are dropped from a height h. The small ball then bounces back up to a height of $3h$. What is the greatest possible height the large ball can bounce up to? (Norwegian Physics Olympiad 2018)

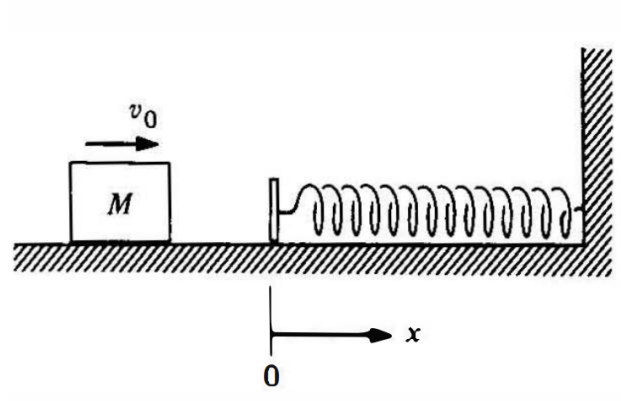

Figure 3: Mass hits spring under friction

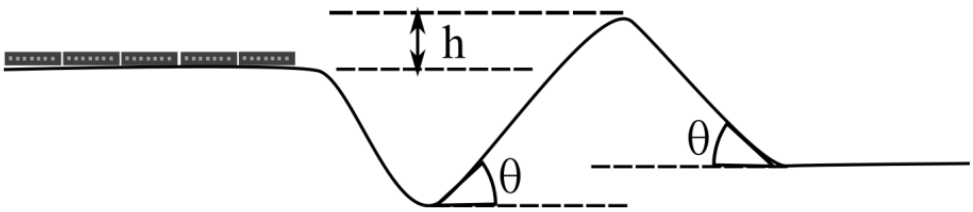

Figure 4: Train on hill

6. A block of mass M slides along a horizontal table with speed v_0. At $x = 0$ it hits a spring with spring constant k and begins to experience a friction force (see figure 3). Find the loss in mechanical energy when the block has first come momentarily to rest. Do this for the case of

   (a) a constant coefficient of friction μ.

   (b) a coefficient of friction which varies like $\mu(x) = b * |x|$ (some tricky maths!)

   Hint: Consider energy! Not forces. (Kleppner & Kolenkow)

7. A train of length L is at rest on a horizontal surface. Then we give it a little speed, so that it just starts to roll down a hill. After a while, the train comes to a mountain that it must roll over. The mountain has a slope θ with the horizontal on both sides. How high above the starting point can the top of the mountain be maximum, so that the train just gets over? The train has no engine, and you should ignore all friction and air resistance. See figure 4. (Norwegian Physics Olympiad 2022)

8. On an inclined plane, two points are marked, A and B. Point A is higher up on the inclined plane than B. We let a block slide down the inclined plane. When it passes A, the speed is v, and when it passes B, the speed is $2v$. Then we let the block slide again. Now the speed at A is $2v$. What will be the speed at B? (Norwegian Physics Olympiad 2023)

9. Two blocks are hanging at opposite ends of a rope that hangs over a frictionless pulley. Block 1 and block 2 have masses m_1 and m_2, respectively, where $m_1 > m_2$. Block 1 is held at rest at a height h above the ground. Then block 1 is released. How much additional height will block 2 be able to gain after block 1 hits the ground? (Norwegian Physics Olympiad 2023)

2.3 Exploring the deep

10. The block shown in the drawing is acted on by a spring with spring constant k and a weak friction force of constant magnitude f (see figure 5. The block is pulled distance x_0 from equilibrium and released.

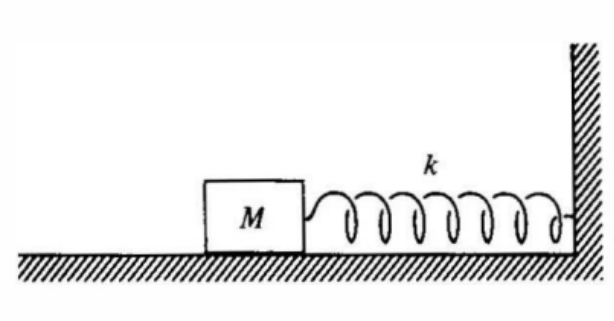

Figure 5: Mass on spring under friction

It oscillates many times and eventually comes to rest

(a) Show that the decrease of amplitude is the same for each cycle of oscillation.

(b) Find the number of cycles n the mass oscillates before coming to rest.

(Kleppner & Kolenkow)