Technical University of Cluj-Napoca
Faculty of Electronics, Telecommunications, and Information Technology

Systems with Analog Integrated Circuits Project

Student:
Pedolu Andreea-Emilia

Coordinator:
Raul Oneț

2025-2026

TABLE OF CONTENTS

1.1 Signal Source……... 2
1.2 Stage 1: Single-ended Noninverting Amplifier……2
I. DC OP……...……2
Correct static operating point……...……..2
DC output level compensation/adjustment…….…..……4
II. AC……...……5
Low frequency gain = specifications……..5
Bandwidth > filter band……..6
CMRR……7
PSRR……...……...8
III. Transient……..……10
SR > specifications……...…10
Linearity > specifications (for THD < 1%)…….....11
2. Stage 2: Filter……...12
I. DC OP……...……..12
Correct static operating point……...12
II. AC……..14
Band pass gain = specifications……14
Bandwidth = specifications……..14
III. Transient……..……15
Linearity > specifications……15
3. PGA……..17
I. DC OP……...……..17
Correct static operating point……...17
II. AC……..……...19
All the stages of gain from specifications implemented……..19
PGA bandwidth (for every gain) > filter bandwidth……21
Linearity> specifications for minimum gain and input maximum amplitude (for THD < 1%)……...…….23
III. Transient……..……25
Linearity > specifications for maximum gain and input minimum amplitude (for THD < 1%)……..…….……25
4. Nonlinear Circuit……..26
I. DC OP……...……...……...26
Correct static operating point……...……26
II. DC sweep + transient……...…….....27
Gain = specifications……..……..27
III. Transient……...…...……30
Implementing the function of circuit……30
Domain of functioning > maximum input amplitude……...30
5. The complete circuit……31

1.1 Signal Source

Based on the given specifications I had to implement the signal source as a single ended voltage source with 0 DC offset voltage with the frequency being within the bandwidth of the bandpass filter (stage 2) and it's equal with 7kHz from the specifications.

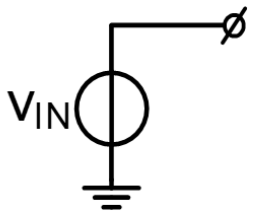

1.2 Stage 1: Single-ended Noninverting Amplifier

Specifications:

Stage 1					
Signal Source	**Minimum Amplitude (for maximum gain PGA)**	**Maximum Amplitude (for minimum gain PGA)**	**Measurement unit**	**Type Stage 1**	**|Gain| stage 1 (linear)**
1	6.22E-02	1.75E-01	V (single ended)	1	18

Requirements:

DC OP	Correct static operating point
	DC output level compensation/adjustment
AC	Low frequency gain = specifications
	Bandwidth > filter band
	CMRR, PSRR
Transient	SR > specifications
	Linearity > specifications (for THD < 1%)

I. DC OP

Correct static operating point

The first stage is represented by a noninverting voltage to voltage amplifier with one operational amplifier and DC compensation.

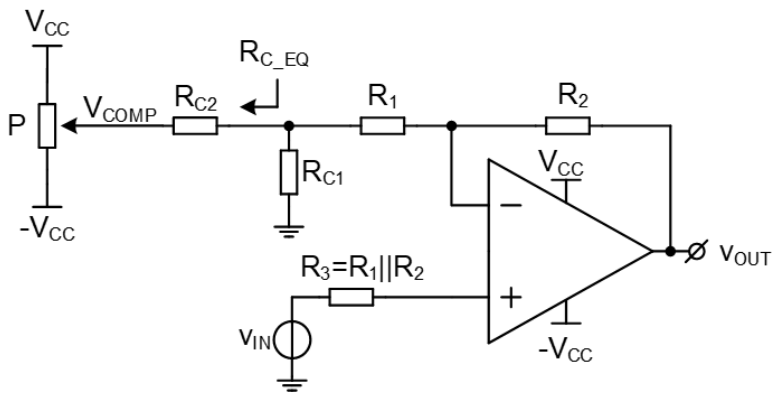

The resistances R_1, R_2, R_3 were calculated by using the next formulas:

$$A_V = 1 + \frac{R_2}{R_1} \tag{1}$$

$$\mathrm{R_3 = R_1 \,||\, R_2} \tag{2}$$

$$\Rightarrow 18 = 1 + \frac{R_2}{R_1} \Rightarrow R_2 = 17 \cdot R_1 \Rightarrow \text{I choose } R_1 = 1\mathrm{k}\,\Omega \Rightarrow \mathrm{R_2 = 17k\Omega}$$

$$\Rightarrow \mathrm{R_3 = 944.13\ \Omega} \Rightarrow \mathrm{R_2 = 16.9k\Omega, R_3 = 1k\Omega} \text{ (from E96 series)}$$

In order to find the values of the resistances $\mathrm{R_{C1}}$ and $\mathrm{R_{C2}}$ we need first to find the offset error of the output voltage. To determine it, I short circuited the voltage source to ground and the output to the inverting input to obtain the effect of the offset voltage without the gain.

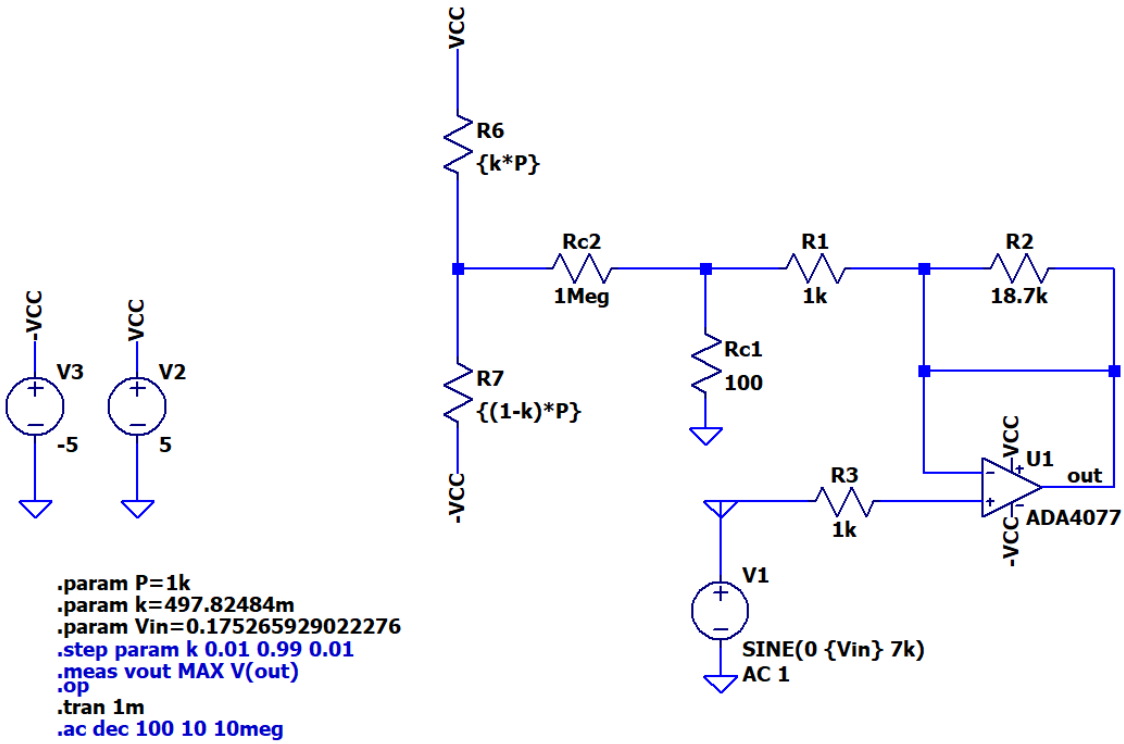

Based on the operating point analysis $\mathrm{V_{in}} = 0\ \mathrm{V} \Rightarrow \mathrm{V_{out}} = 2.59076\ \mu\mathrm{V}$

```
V(out1):        2.59076e-06    voltage
```

I chose $\mathrm{R_{C1}}$ so that $R_{C1} << R_1 \quad \Rightarrow \mathrm{R_{C1}} = 100\Omega$.

The circuit is composed of three parts, the first part is represented by the potentiometer, the second part is represented by the voltage divider and the third part is represented by the negative feedback network.

In order to cascade the circuits the input impedance of the circuits must be very big and the output impedance must be very small. In my case the potentiometer is connected directly to the power supply, so only output resistance is important for the circuit. For the second part I have input and output resistances and for the third part I have only input resistance. The output

resistance of the first part is smaller than the input resistance of the second part, so the output resistance of the first part is not going to affect the circuit at all. Meanwhile the input resistance of the third part is smaller than the output resistance of the second part so it will not affect the circuit at all. In conclusion, I can compute the voltage by approximating it with only the voltage divider formula between R_{C1} and R_{C2}.

$$V_{\mathrm{out}/V_{COMP}} = \frac{\mathrm{R_{C1}}}{\mathrm{R_{C1}+R_{C2}}} \cdot V_{COMP} \text{ (with approximation)} \tag{3}$$

$$V_{OUT/V_{COMP}} = -\frac{R_{C1}}{R_{C1}+R_{C2}} V_{COMP} \frac{R_2}{R_1 + R_{C_EQ}} \text{ (without approximation)} \tag{4}$$

$$R_{C1} << R_{C2} \tag{5}$$

$$V_{OUT/I_B,V_{OS}} \leq V_{OS}(1+\frac{R_2}{R_1}) + I_{OS}R_2 \tag{6}$$

From the datasheet of the operational amplifier $\Rightarrow \mathrm{V_{OS}} = 10\mu\mathrm{V}$, $\mathrm{I_{OS}} = 0.1\mathrm{nA}$

Parameter	Symbol	Test Conditions/Comments	Min	Typ	Max	Unit
INPUT CHARACTERISTICS						
Offset Voltage	V_{OS}					
ADA4077-1/ADA4077-2						
B Grade, SOIC				10	25	μV
Input Offset Current	I_{OS}		−0.5	+0.1	+0.5	nA

From (6) $\Rightarrow \mathrm{V_{out}} = 10\mu\mathrm{V} \cdot \left(1 + \frac{16.9\mathrm{k\Omega}}{1\mathrm{k\Omega}}\right) + 0.1\mathrm{n}A \cdot 16.9\mathrm{k\Omega} \Rightarrow \mathrm{V_{out}} = 180.69\mu\mathrm{V}$

$$\overset{(3)}{\Rightarrow} 180\mu\mathrm{V} = \frac{\mathrm{R_{C1}}}{\mathrm{R_{C1}+R_{C2}}} \cdot 1.8\mathrm{V} \Rightarrow 10000 \cdot \mathrm{R_{C1}} - R_{C1} = R_{C2} \Rightarrow 9999 \cdot R_{C1} = R_{C2}$$

$$\Rightarrow R_{C2} = 999000\Omega = 999.9\mathrm{k\Omega} = 1\mathrm{M\Omega} \text{ (from the E96 resistor series)}$$

Conclusion: The input and output signal has the DC value of 0V. Therefore, they have the same operating point.

DC output level compensation/adjustment

Firstly, I calculated above the value of the of the DC compensation is $\mathrm{V_{out}} = 180.69\mu\mathrm{V}$ which was obtained using the values from the datasheet in order to obtain the general case.

Secondly, I want at the potentiometer the value $\mathrm{V_{out}} = -180.69\mu\mathrm{V}$ to compensate the value of the output error voltage. To obtain the wanted value the potentiometer must be moved very slightly, which is difficult. For this operation to become more practical I choose to search for the value 1.8V because it's easier to find and it's a multiple with the power of 10 of the value $180.69\mu\mathrm{V}$.

If I have k=1 for $\mathrm{V_{out}} = 5V$ and k = x for $\mathrm{V_{out}} = 1.8V$ then by applying the simple rule of three $\mathrm{k} = \mathrm{x} = \frac{1.8 \cdot 1}{5} = 0.36$

In order to verify this, I performed the transient analysis with the step param k varying from 0.01 to 0.99 with a step of 0.01. with the measurement of max V(out) in order to find the precise value of the k. After the analysis k = 497.78996m ≅ 0.497.

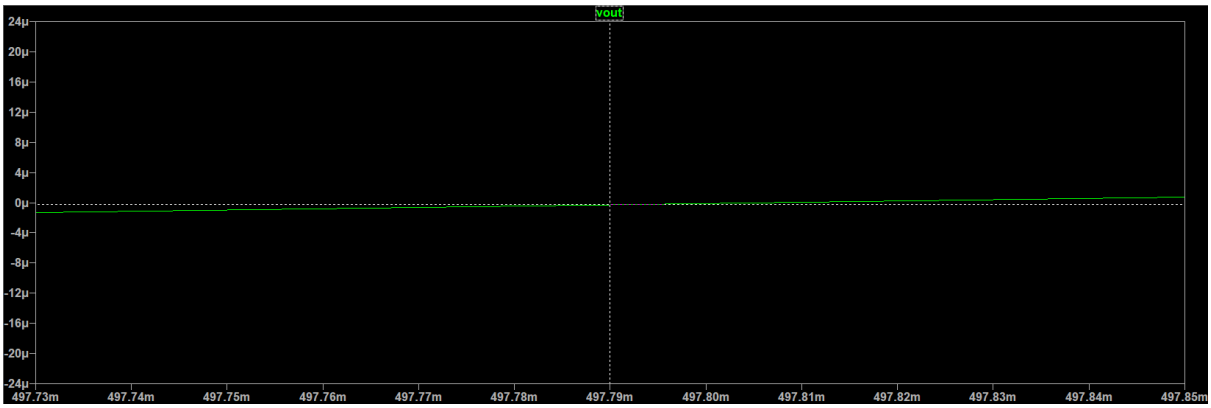

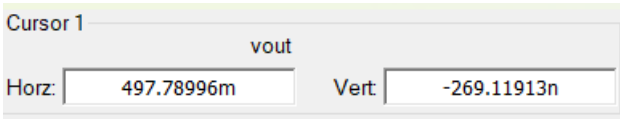

<u>*Conclusion:*</u> The value of the output error compensation is $V_{out} = 180.69\mu V$. For the position of the potentiometer k = 0.497 the value of $V_{out} = 180.69\mu V$. The value for V_{OS} from the datasheet is different from the one obtain in LTSpice. In datasheet $V_{OS} = 10\mu V$, while in LTSpice $V_{OS} = 2.59076\ \mu V$ therefore the value of k was determined via a parametric analysis.

II. AC

<u>Low frequency gain = specifications (=18)</u>

In order to show that at low frequency gain the value of the voltage gain is equal with $18\ \frac{V}{V}$ I performed the AC analysis and the results showed that by not taking in consideration the effect of the resistance R_{C1} the result of the simulation resulted in a wrong value of the gain. So, by using the formula from below I get a more accurate value for the resistance R_2.

$$A_V = \frac{V_{OUT}}{V_{IN}} = 1 + \frac{R_2}{R_1 + R_{C_EQ}} \tag{7}$$

$$R_{C_EQ} \cong R_{C1} \tag{8}$$

$$\overset{(7),(8)}{\Longrightarrow} 18 = 1 + \frac{R_2}{10^3+100} \Rightarrow 17 = \frac{R_2}{1100} \Rightarrow R_2 = 18.7k\Omega \text{ (from E96 resistors series)}$$

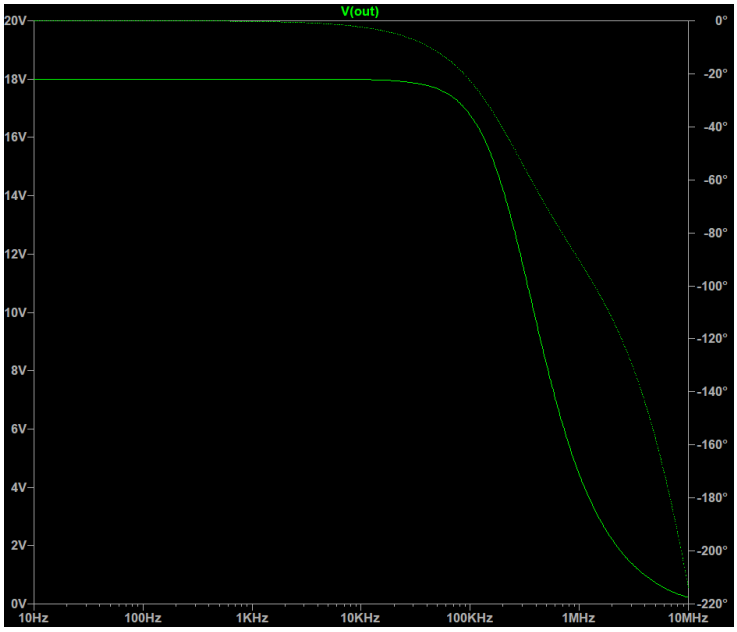

<u>Bandwidth > filter band</u> $\Rightarrow$ Bandwidth > 7000 Hz

I performed AC sweep and measured at -3dB below the DC gain and I found that the cutoff frequency of the circuit has the value 260.6504kHz which is above the frequency of the filter band 7kHz.

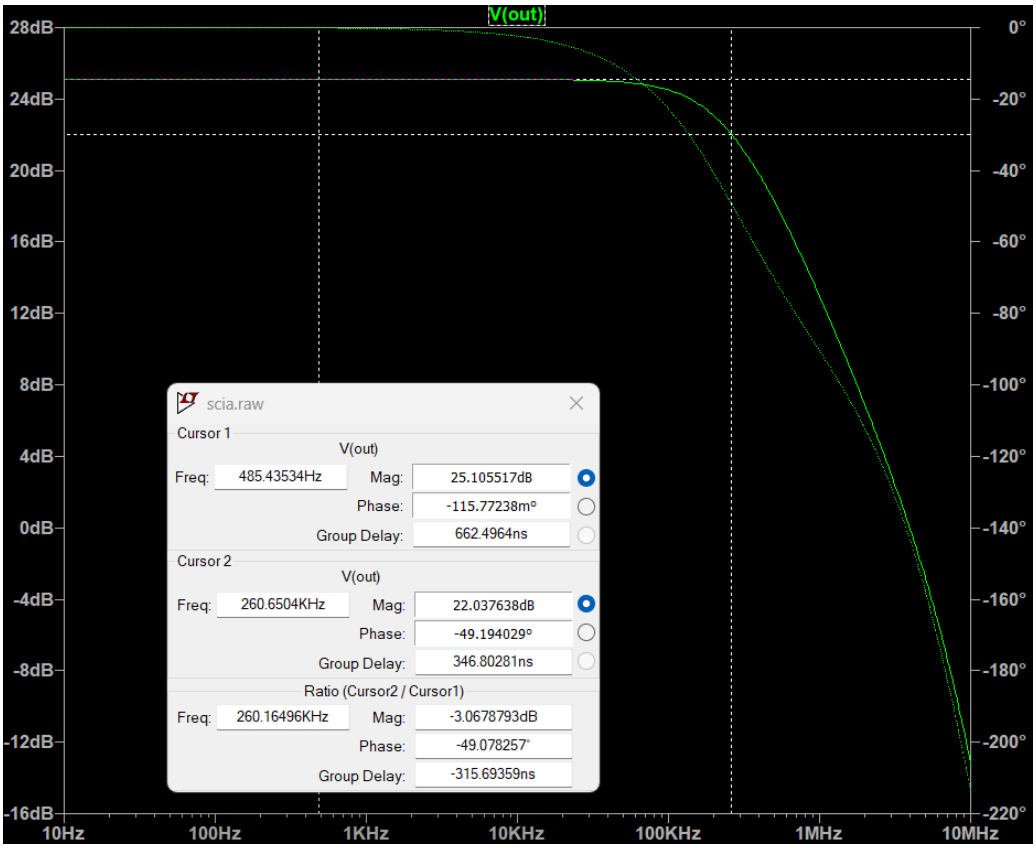

CMRR

CMRR is the division between the differential gain and the common mode gain.

I added the common mode voltage source and I short circuited the feedback of the circuit when performing the AC simulation in order to follow the steps from the laboratory and to find the CMRR of the operational amplifier itself.

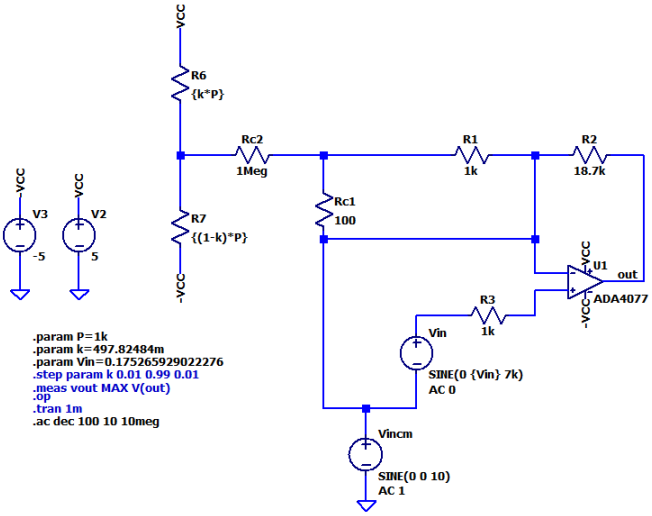

To find the common mode gain I set the AC value of the common mode voltage source to 1 and the value of the differential voltage source to 0 and I obtained the value

$$a_{CM} = 6.6053492mV$$

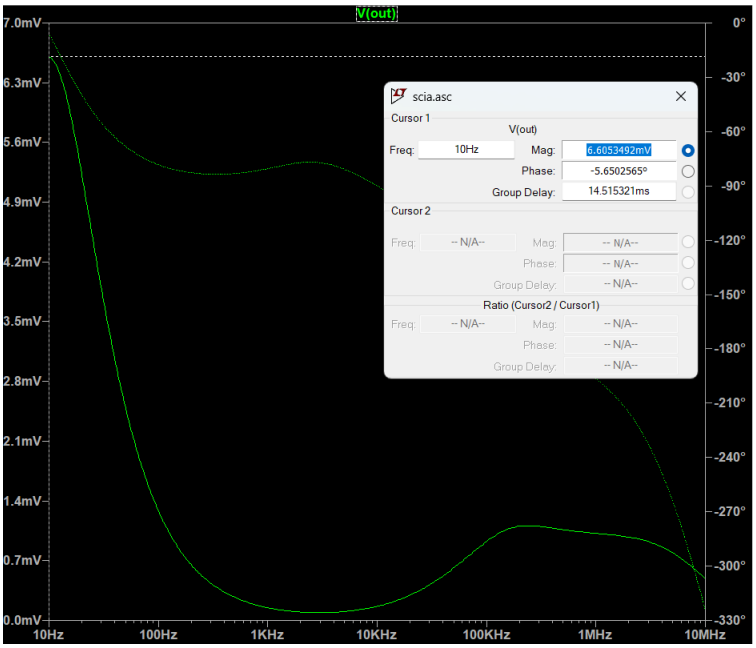

To find the differential mode gain I set the AC value of the common mode voltage source to 0 and the value of the differential voltage source to 1 and I obtained the value

$$a_{diff} = 1.8369575kV$$

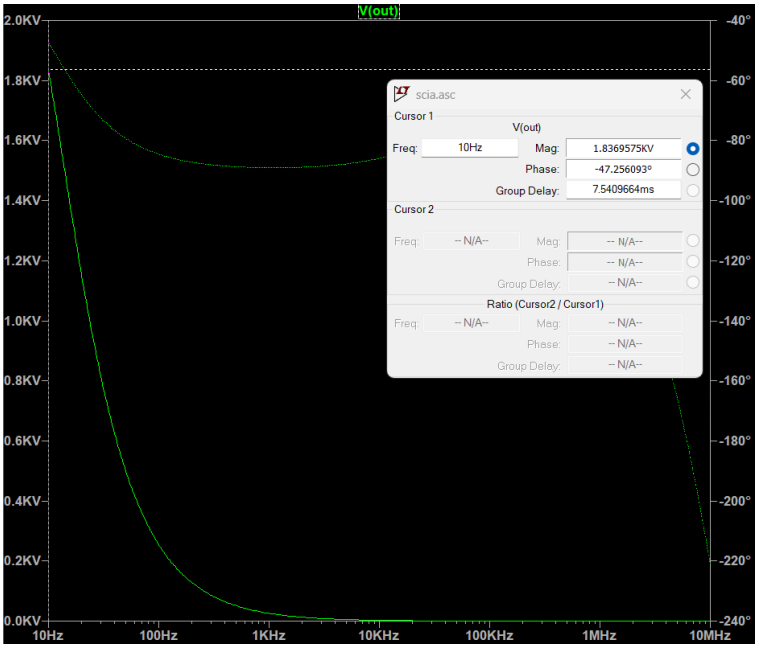

$$\text{CMRR} = \frac{a_{\text{diff}}}{a_{\text{CM}}} = \frac{1.8369575\text{k}V}{6.6053492\text{m}V} \Rightarrow \text{CMRR} = 278101.49689 = 108.88407\ \text{dB}$$

Parameter	Symbol	Test Conditions/Comments	Min	Typ	Max	Unit
Common-Mode Rejection Ratio	CMRR	V_{CM} = −3.8 V to +3 V	122	140		dB

The obtained value of the CMRR is approximately 108.88 dB and the value from the datasheet is 140dB which is a close value.

PSRR

PSRR is the division between the differential gain and the power supply gain.

To find the power supply gain I set the AC value of the power supply voltage source to 1 and the value of the differential voltage source to 0 and I obtained the value $a_{PS} = -61.438206\text{dB}$

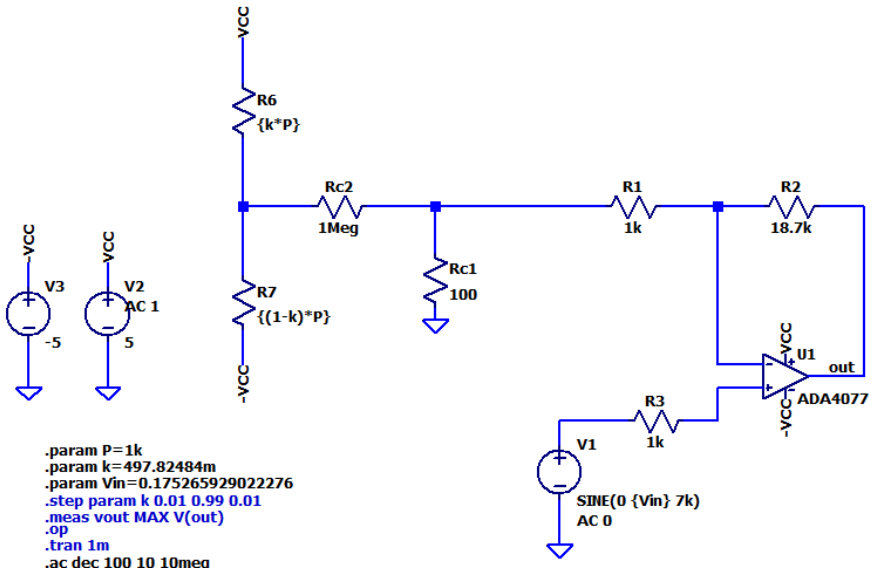

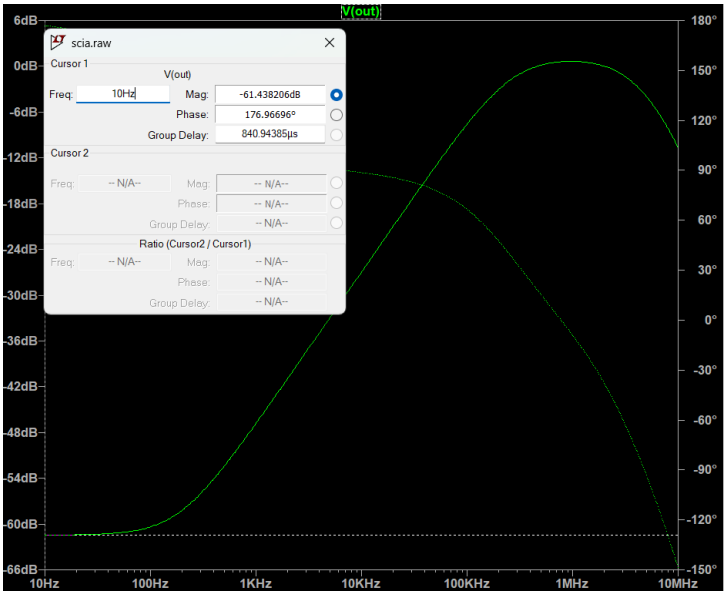

To find the differential gain I set the AC value of the differential voltage source to 0 and the value of the power supply voltage source to 1 and I obtained the value $a_{diff} = 25.105514\text{dB}$

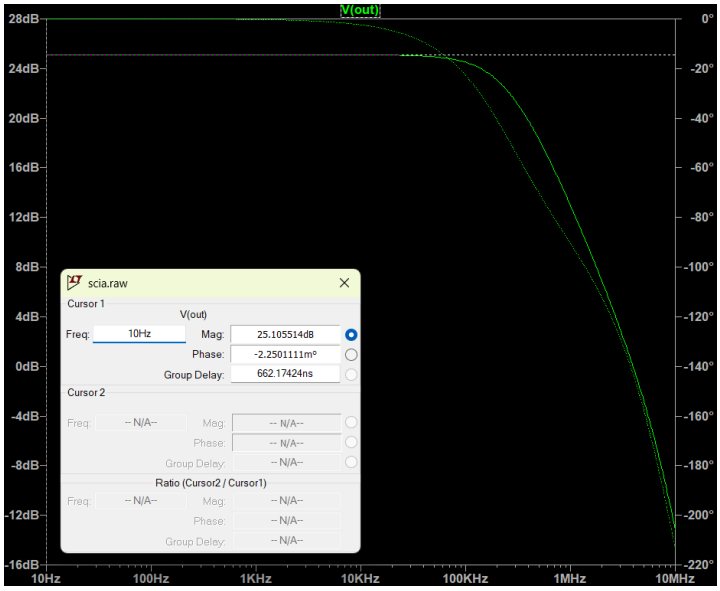

$$\text{PSRR} = \frac{a_{diff}}{a_{PS}} \Rightarrow \text{PSRR} = \frac{25.105514\text{dB}}{-61.438206\text{dB}} \Rightarrow \text{PSRR} = 86.54372\ \text{dB}$$

Parameter	Symbol	Test Conditions/Comments	Min	Typ	Max	Unit
POWER SUPPLY						
Power Supply Rejection Ratio	PSRR	V_S = ±2.5 V to ±18 V	123	128		dB

III. TRANSIENT

SR > specifications

To find the slew rate I set the input voltage source to rectangular signal with a very fast rise time.

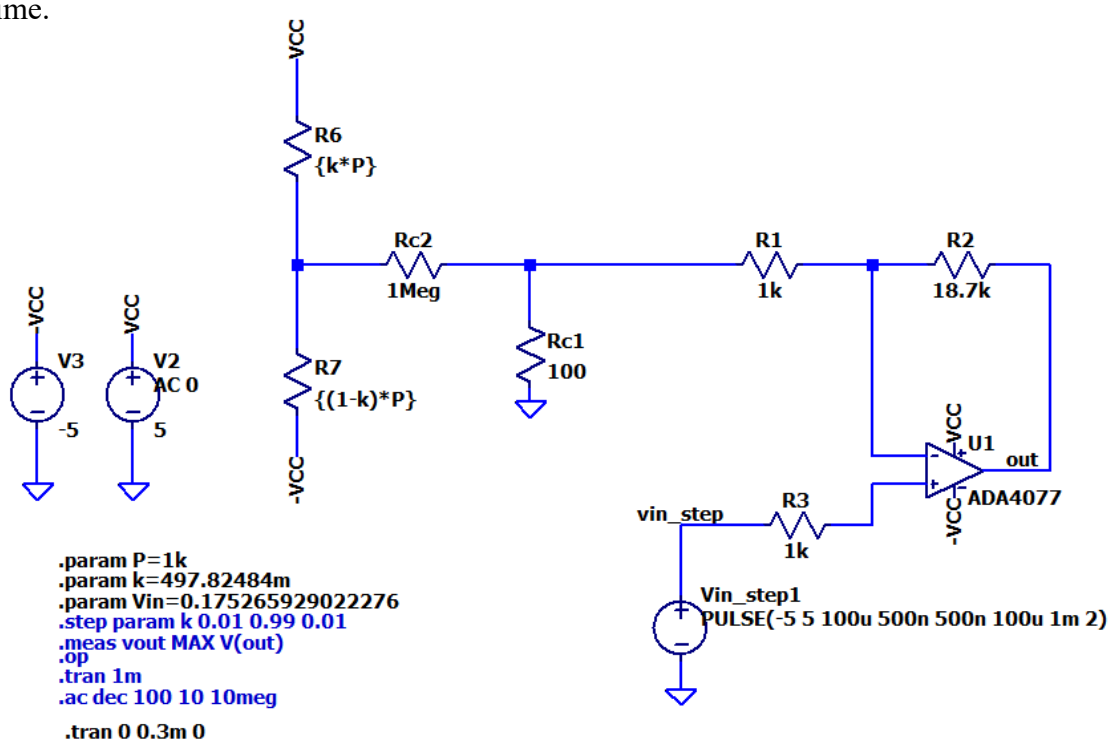

Afterwards, I used two cursors to measure the slew rate and I obtained the value:

$$\mathrm{SR} = 1.10822\,\frac{\mathrm{V}}{\mathrm{us}}$$

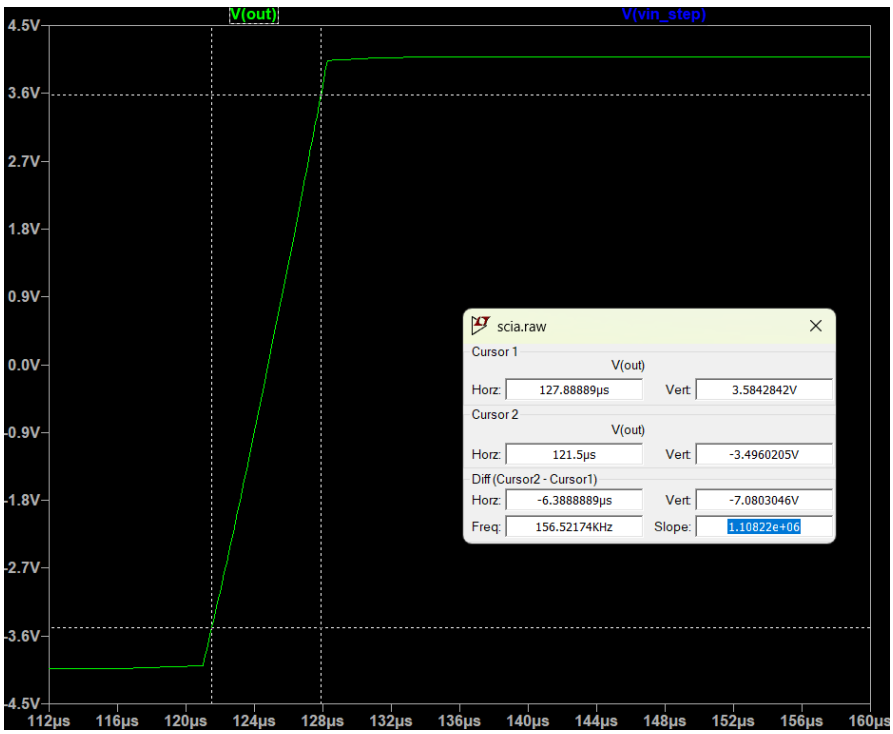

The slew rate is similar to the typical value from the datasheet.

Parameter	Symbol	Test Conditions/Comments	Min	Typ	Max	Unit
Slew Rate	SR	R_L = 2 kΩ		1.2		V/µs

<u>Linearity > specifications (for THD < 1%)</u>

To find the linearity I used the transient analysis and then I applied a sinewave input signal and I checked to see if the output signal keeps the same shape and frequency as the input signal.

If the output signal would not be linear then it would be distorted therefore with the total harmonic distortion measurement I checked the linearity from specifications. If THD < 1% we consider it linear.

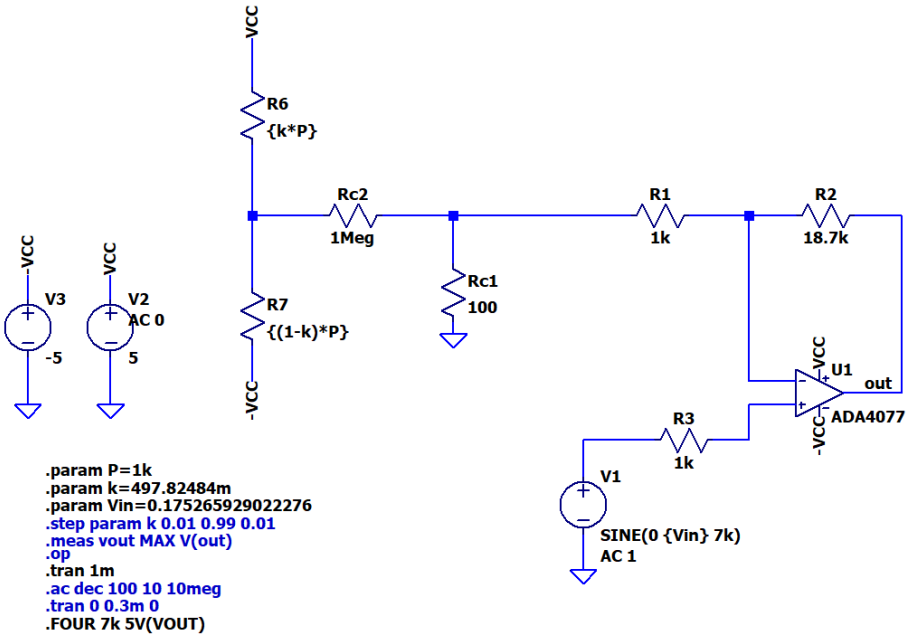

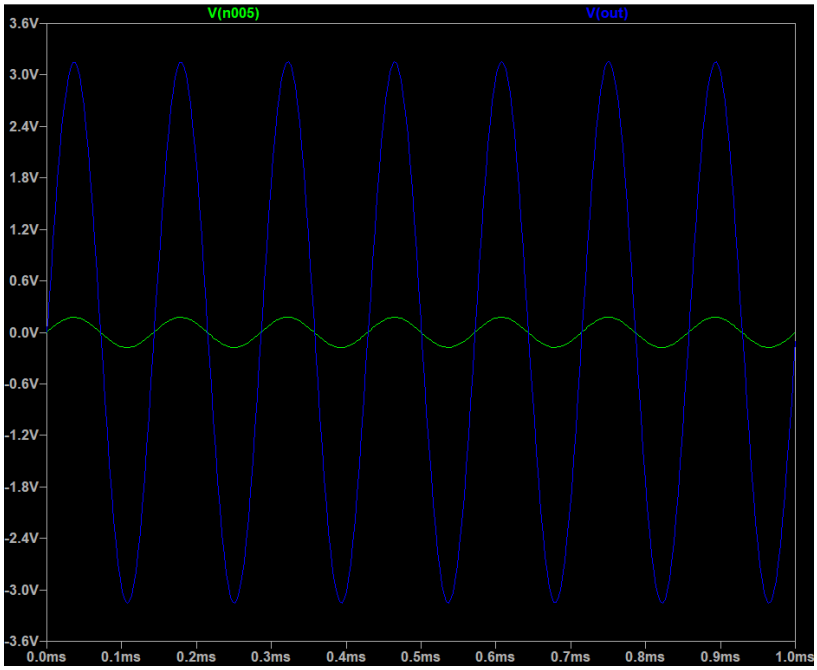

The amplified output signal has an amplitude of 3.151431V.

The value of the total harmonic distortion is 0.062706% which is smaller than 1%. This means that the circuit is linear.

```
Partial Harmonic Distortion: 0.004746%
Total Harmonic Distortion:   0.062706%
```

2. Stage 2: Filter

Specifications:

Stage 2				
Type Stage 2	**|H0| linear gain in the passing band**	**Minimum Input Resistance**	**Bandwidth**	**Quality Factor Q**
10	1	3.50E+03	7.00E+03	0.707

Requirements:

DC OP	Correct static operating point
AC	Band pass gain = specifications
	Bandwidth = specifications
Transient	Linearity > specifications

I. DC OP

Correct static operating point

The second stage is represented by a band pass filter with operational amplifiers and voltage to voltage configuration which also represents Tow-Thomas biquad.

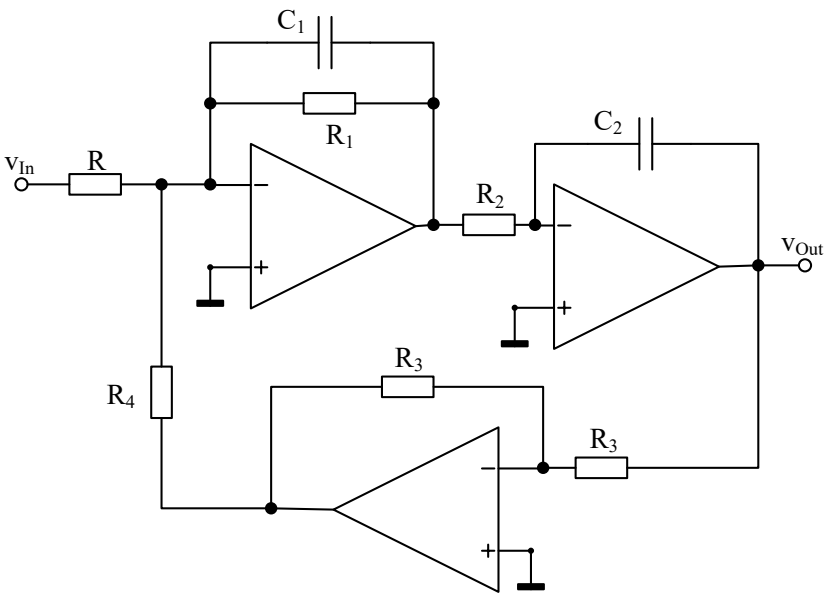

The values of the resistances were calculated using the given excel and changing the values of the parameters to the corresponding ones from the specifications.

$$C_1 = C_2 = C;\ \text{choose the value of C;}$$

$$R_2 = R_4;\ R_2 = \frac{1}{\omega_0 \cdot C};\ R_1 = Q \cdot R_2; R = \frac{R_1}{H_0};\ \text{choose the value of } R_3$$

Input voltage				
w0 [rad/sec]	Q	f0 [Hz]	H0 [dB]	H0 [linear]
3,11E+04	7,07E-01	4,95E+03	0	1

set C1=C2=C [F]	R1 [Ohm]	R2 [Ohm]	R3 [Ohm]	R4 [Ohm]	R [Ohm]
2,50E-09	9,09E+03	1,29E+04	1,00E+04	1,29E+04	9,09E+03

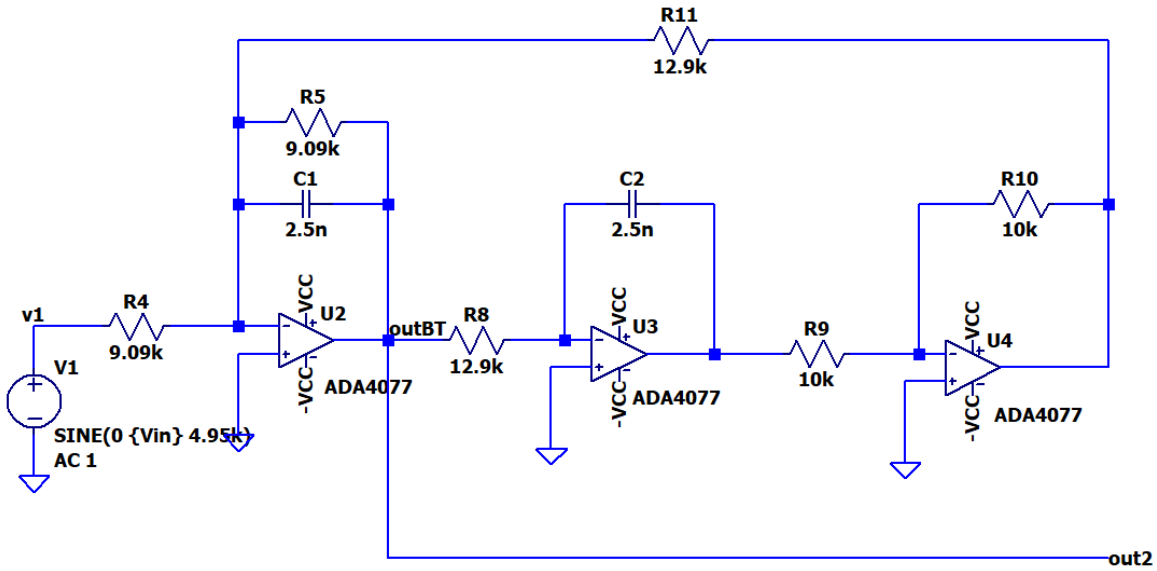

After performing the op analysis, I obtained the next values:

```
V(out2):        -4.25627e-06  voltage
V(v1):          0             voltage
```

The output voltage of the second stage is centered around 0 but, in the picture can be seen the offset value.

II. AC

<u>Band pass gain = specifications</u>

In order to find the band pass gain I performed the AC analysis and I used one cursor placed in the middle of the curve. I obtained the value for the frequency of 4.9870271kHz. The linear gain in the passing band is 1.003091 which is around the value from the specifications.

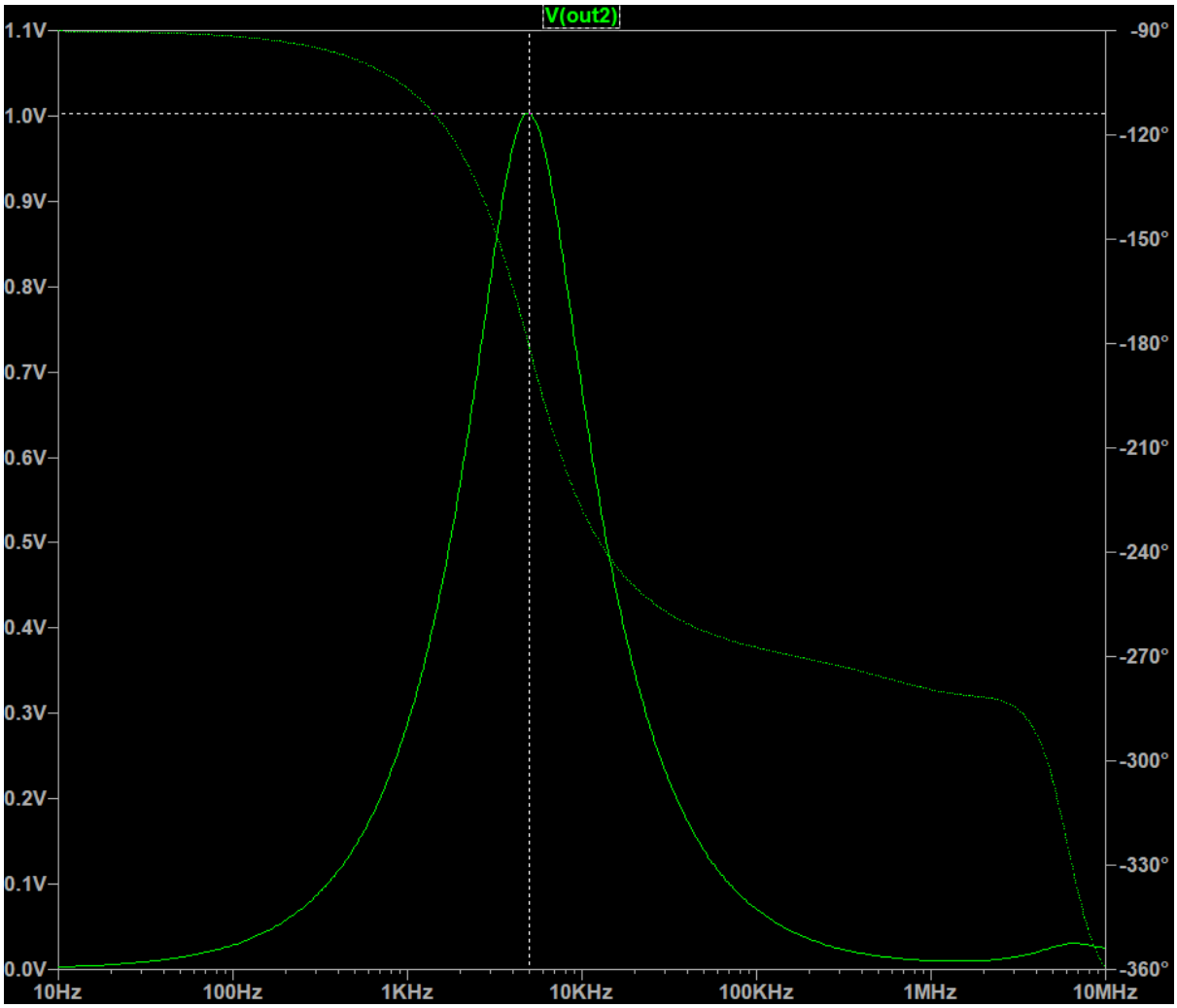

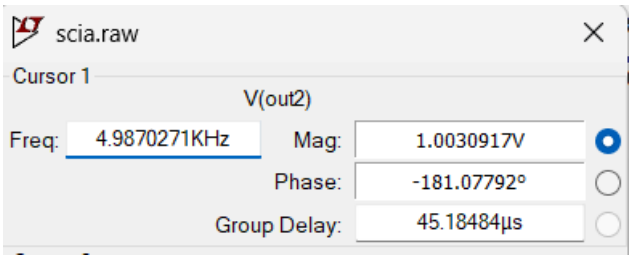

<u>Bandwidth = specifications</u>

In order to find the bandwidth I performed the AC analysis and I used two cursors placed at -3dB and 3bB. I obtained the value for the band of 7.149kHz which is close to the specifications (7kHz).

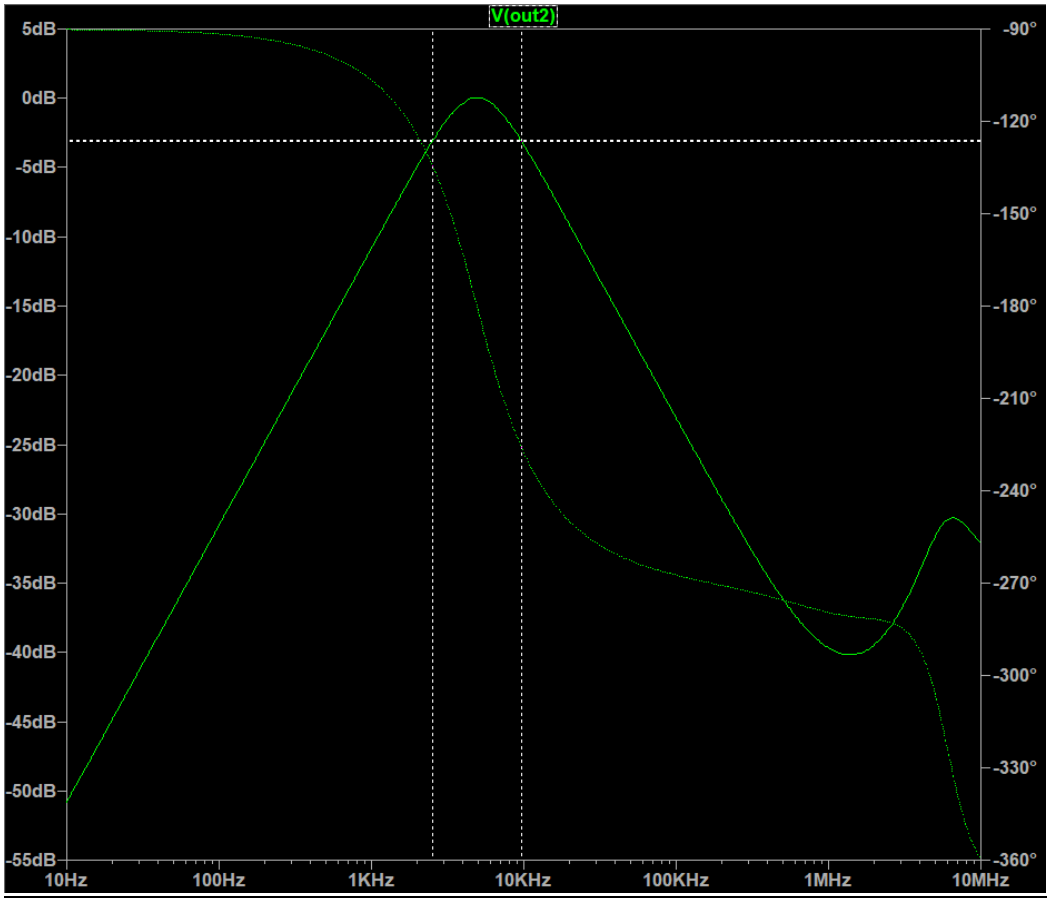

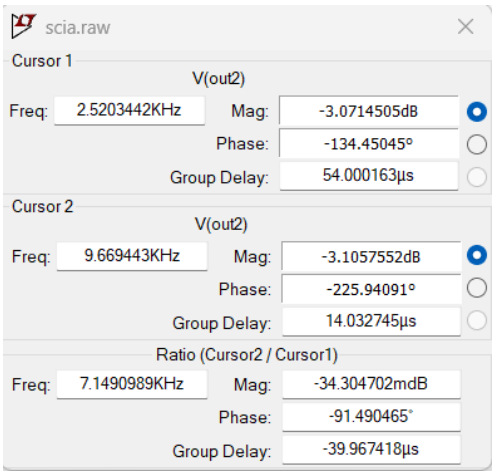

III. Transient

<u>Linearity > specifications</u>

Based on the information from the specifications for a harmonic signal with the frequency equal to the frequency of the band pass filter:

$$output\ amplitude\ =\ (input\ amplitude)\cdot(band\ pass\ gain)$$

At the input voltage source I used a sinusoidal voltage with the value of the output voltage of the first stage.

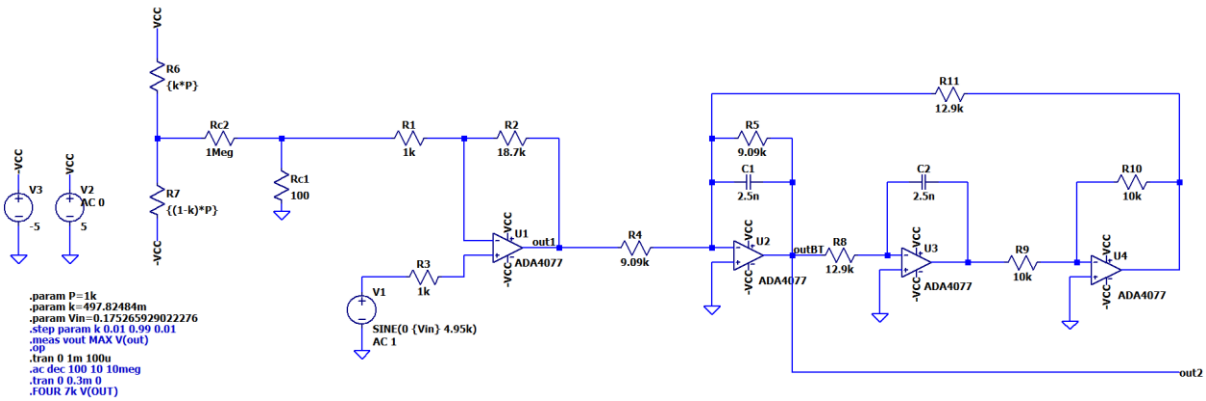

The signal has the same amplitude and shape. The signal Vout2 has an opposite direction than Vout1 because the second stage is composed of 3 inverting amplifiers which are inverting the signal.

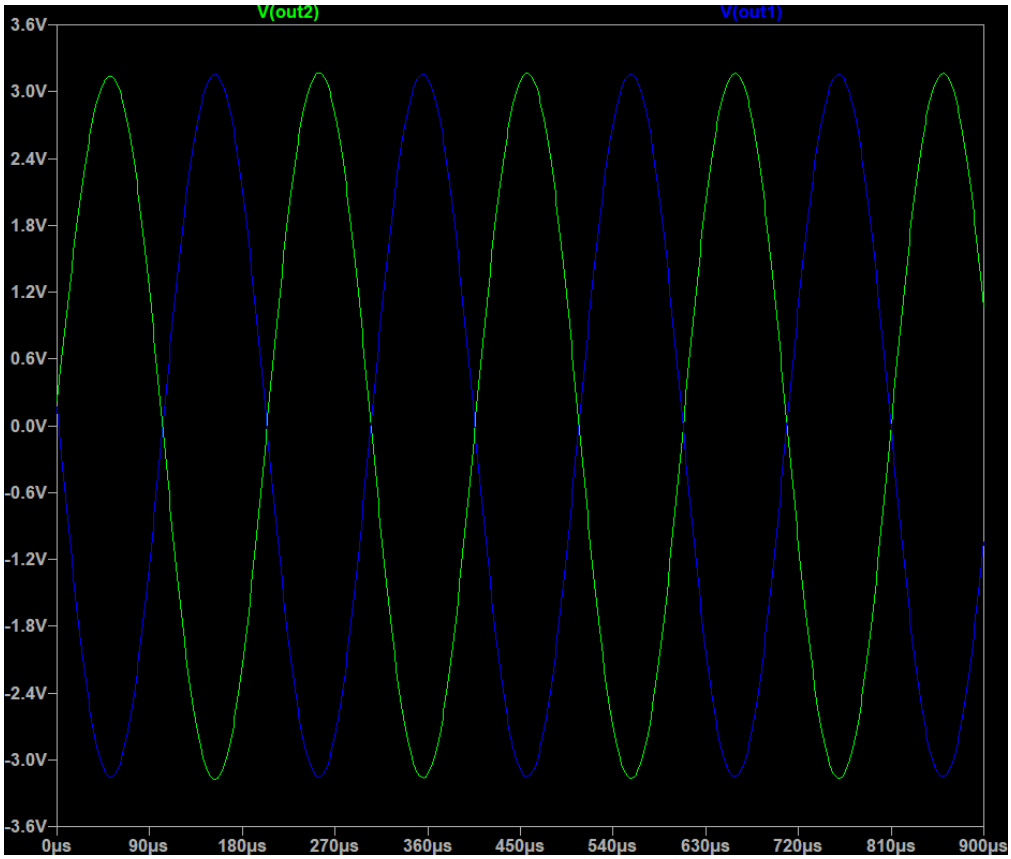

3. Stage 3: PGA

Specifications:

Stage 3					
Type Stage 3	**Minimum gain [dB]**	**Resolution (minimum step size) [dB]**	**Number of steps**	**Maximum gain [dB]**	**Minimum input resistance**
7	4	3	4	13	-

Requirements:

DC OP	Correct static operating point
AC	All the stages of gain from specifications implemented
	PGA bandwidth (for every gain) > filter bandwidth
	Linearity> specifications for minimum gain and input maximum amplitude (for THD < 1%)
Transient	Linearity > specifications for maximum gain and input minimum amplitude (for THD < 1%)

I. DC OP

Correct static operating point

The third stage is represented by a PGA with parallel RG which has 4 gain values.

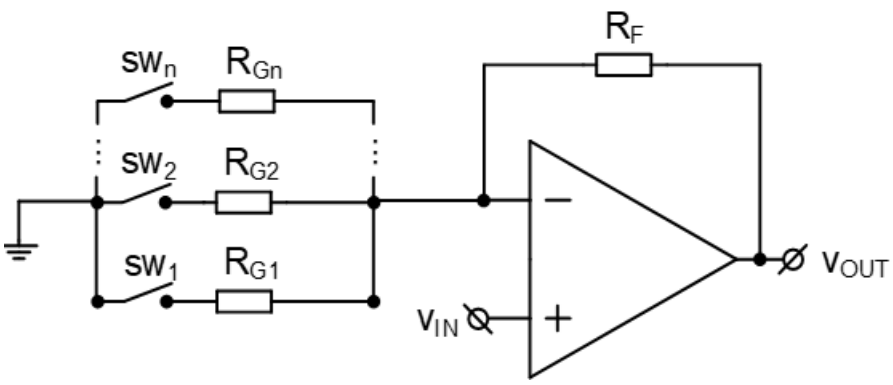

$$\left.\begin{array}{r}\text{Minimum gain} = 4\ [\text{dB}]\\ \text{Maximum gain} = 13\ [\text{dB}]\\ \text{Resolution (minimum step size)} = 3[\text{dB}]\end{array}\right\} \Rightarrow A_0 = \{4\text{dB}, 7\text{dB}, 10\text{dB}, 13\text{dB}\} \Rightarrow$$

$$A_0(\text{linear}) = \{1.58, 2.24, 3.16, 4.47\}$$

Sw4	Sw3	Sw2	Sw1	R_{in}	R_F	Av	BW
V_{DD}	0	0	0	R_{G4}	R_F	$\frac{R_F}{R_{G4}}+1$	$\frac{GBW}{1+\frac{R_F}{R_{G4}}}$
0	V_{DD}	0	0	R_{G3}	R_F	$\frac{R_F}{R_{G3}}+1$	$\frac{GBW}{1+\frac{R_F}{R_{G3}}}$
0	0	V_{DD}	0	R_{G2}	R_F	$\frac{R_F}{R_{G2}}+1$	$\frac{GBW}{1+\frac{R_F}{R_{G2}}}$
0	0	0	V_{DD}	R_{G1}	R_F	$\frac{R_F}{R_{G1}}+1$	$\frac{GBW}{1+\frac{R_F}{R_{G1}}}$

I choose R_F = 10kΩ and the gain for switch 1 the minimum gain.

$$Av = \frac{R_F}{R_{in}} + 1 \quad \Rightarrow \quad \begin{cases} 4.47 = \frac{R_F}{R_{G4}} + 1 \\ 3.16 = \frac{R_F}{R_{G3}} + 1 \\ 2.24 = \frac{R_F}{R_{G2}} + 1 \\ 1.58 = \frac{R_F}{R_{G1}} + 1 \end{cases} \Rightarrow \begin{cases} R_{G4} = \frac{R_F}{3.47} \\ R_{G3} = \frac{R_F}{2.16} \\ R_{G2} = \frac{R_F}{1.24} \\ R_{G1} = \frac{R_F}{0.58} \end{cases} \Rightarrow \begin{cases} R_{G4} = \frac{10k\Omega}{3.47} \\ R_{G3} = \frac{10k\Omega}{2.16} \\ R_{G2} = \frac{10k\Omega}{1.24} \\ R_{G1} = \frac{10k\Omega}{0.58} \end{cases} \Rightarrow$$

$$\Rightarrow \begin{cases} R_{G4} = 2.88k\Omega \\ R_{G3} = 4.62k\Omega \\ R_{G2} = 8.06k\Omega \\ R_{G1} = 17.24k\Omega \end{cases} \Rightarrow \begin{cases} R_{G4} = 2.87k\Omega \\ R_{G3} = 4.64k\Omega \\ R_{G2} = 8.06k\Omega \\ R_{G1} = 17.4k\Omega \end{cases} \text{(from E96 resistor series)}$$

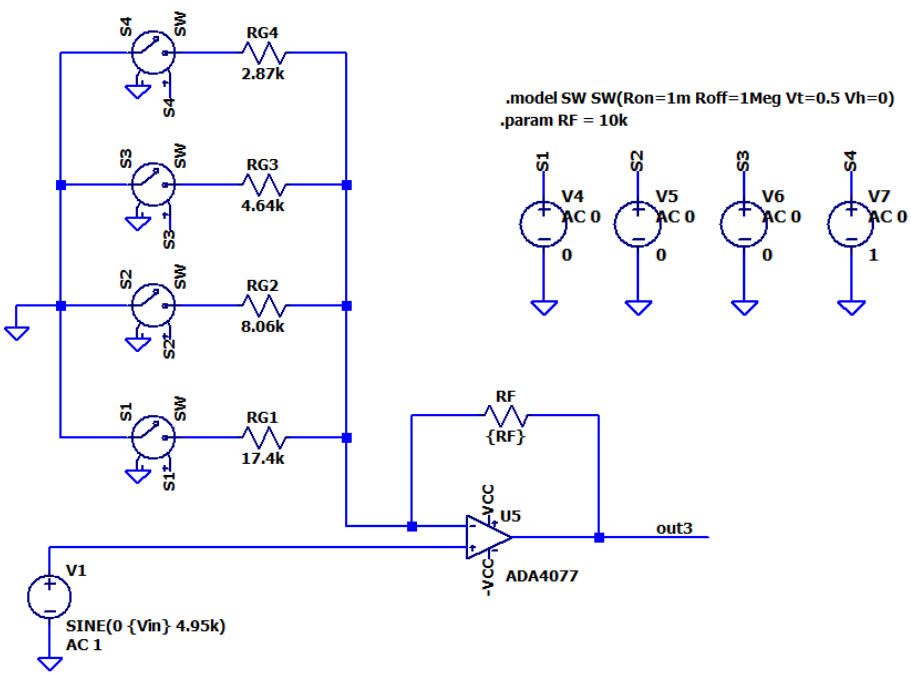

After performing the op analysis, I obtained the value of the output voltage of the third stage which is centered around 0.

```
V(out3):        2.16529e-05    voltage
```

II. AC

<u>All the stages of gain from specifications implemented</u>

When I implemented each stage I performed the AC sweep simulation to check if the DC gain to corresponds to the values from the specifications $A_0 = \{4\text{dB}, 7\text{dB}, 10\text{dB}, 13\text{dB}\}$.

For the frequency response of the circuit to not alter the signal from the filter, the bandwidth of each stage should be bigger than the maximum frequency allowed by the filter. In the second stage, I measured the maximum frequency to be around 9.67KHz therefore, for all stages the bandwidth must be bigger than this value.

In the first stage it was considered the value of the bandwidth from the specification that is, 7kHz, the bandwidth of the circuit from the first stage is around 260kHz, so the simulations were not done again for it, because the condition is fulfilled anyway.

Sw1 – on

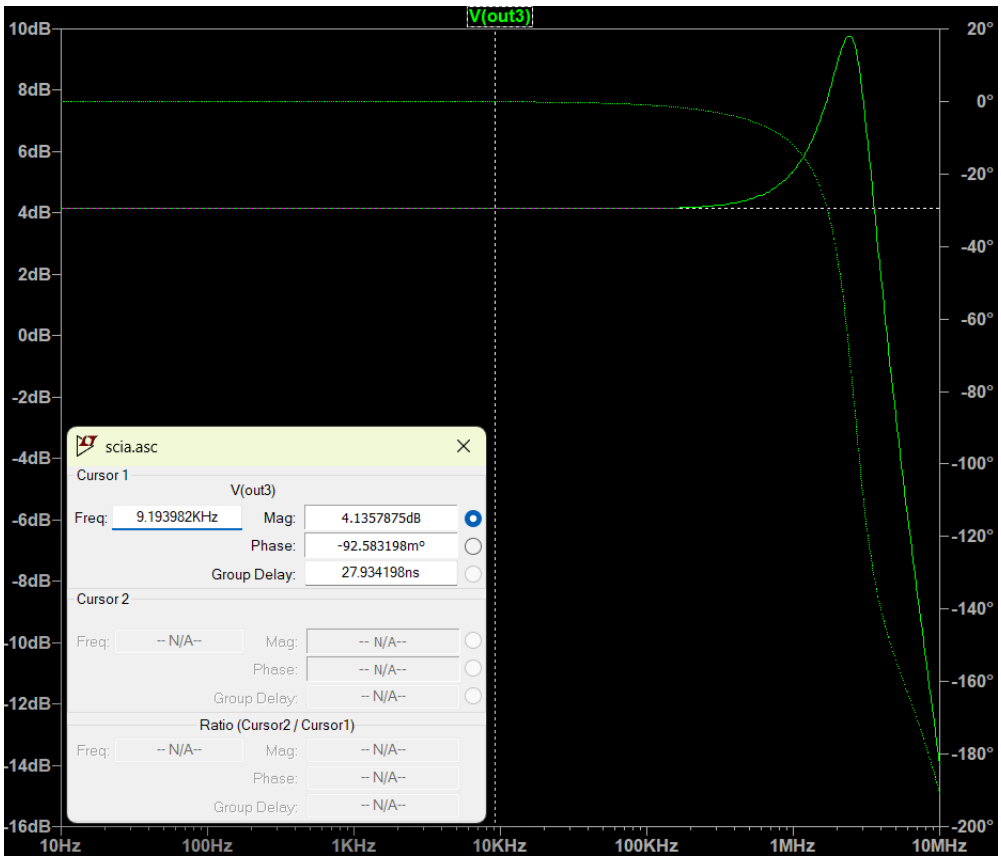

Sw2 – on

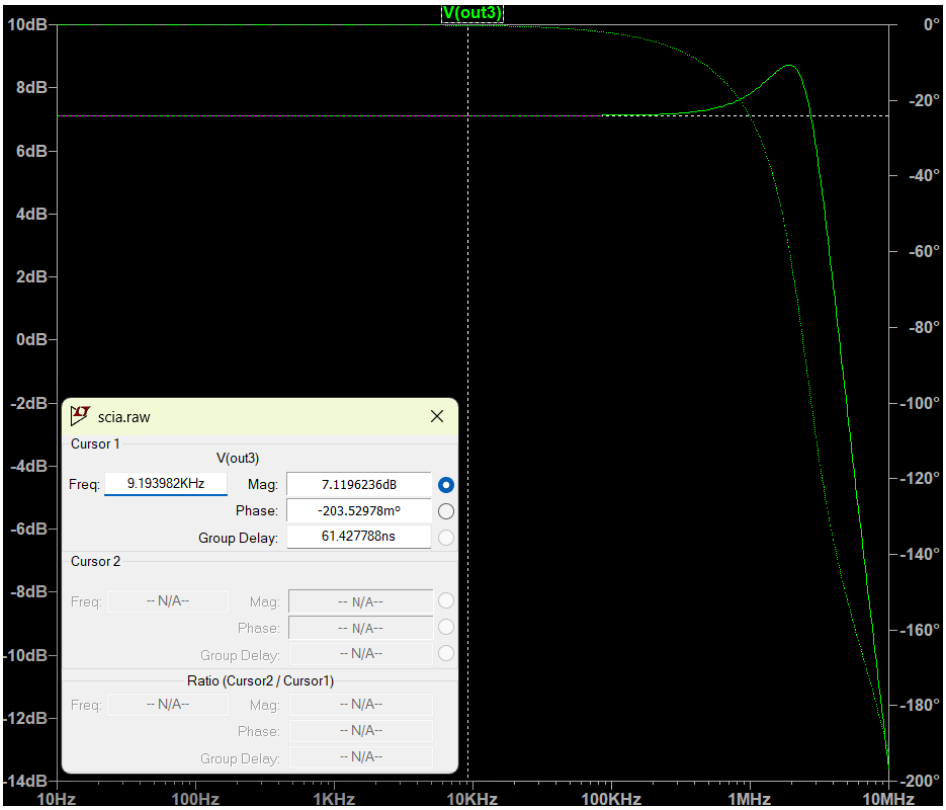
V(out3)
10dB
8dB
6dB
4dB
2dB
0dB
-2dB
-4dB
-6dB
-8dB
-10dB
-12dB
-14dB
0°
-20°
-40°
-60°
-80°
-100°
-120°
-140°
-160°
-180°
-200°
10Hz
100Hz
1KHz
10KHz
100KHz
1MHz
10MHz
scia.raw
Cursor 1
V(out3)
Freq: 9.193982KHz
Mag: 7.1196236dB
Phase: -203.52978m°
Group Delay: 61.427788ns
Cursor 2
Freq: -- N/A--
Mag: -- N/A--
Phase: -- N/A--
Group Delay: -- N/A--
Ratio (Cursor2 / Cursor1)
Freq: -- N/A--
Mag: -- N/A--
Phase: -- N/A--
Group Delay: -- N/A--

Sw3 - on

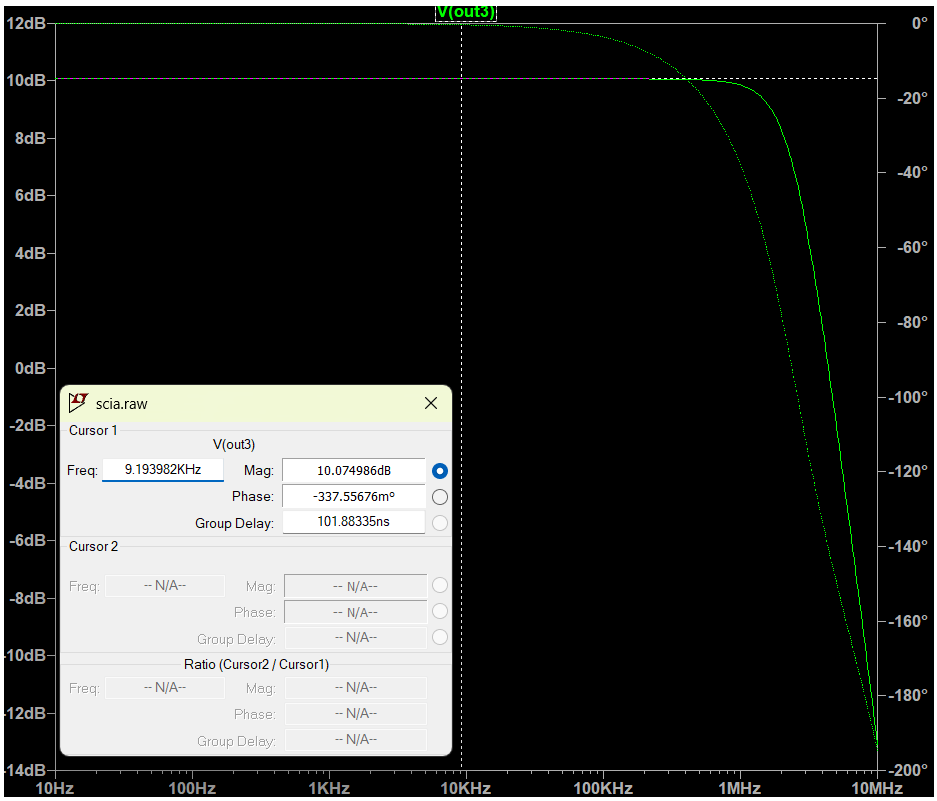
V(out3)
12dB
10dB
8dB
6dB
4dB
2dB
0dB
-2dB
-4dB
-6dB
-8dB
-10dB
-12dB
-14dB
0°
-20°
-40°
-60°
-80°
-100°
-120°
-140°
-160°
-180°
-200°
10Hz
100Hz
1KHz
10KHz
100KHz
1MHz
10MHz
scia.raw
Cursor 1
V(out3)
Freq: 9.193982KHz
Mag: 10.074986dB
Phase: -337.55676m°
Group Delay: 101.88335ns
Cursor 2
Freq: -- N/A--
Mag: -- N/A--
Phase: -- N/A--
Group Delay: -- N/A--
Ratio (Cursor2 / Cursor1)
Freq: -- N/A--
Mag: -- N/A--
Phase: -- N/A--
Group Delay: -- N/A--

Sw4 - on

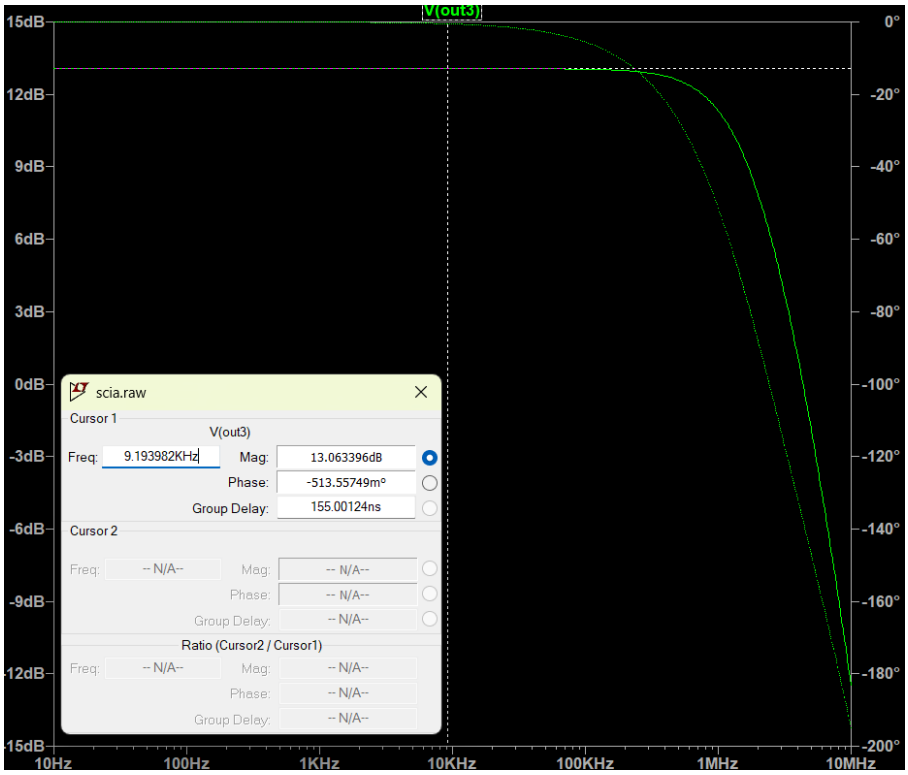

<u>PGA bandwidth (for every gain) > filter bandwidth</u>

For the PGA to work adequately and to not disturb the signal from the third stage, the bandwidth from every gain stage must be bigger than the maximum frequency of the input signal (from the BPF).

Sw1 - on

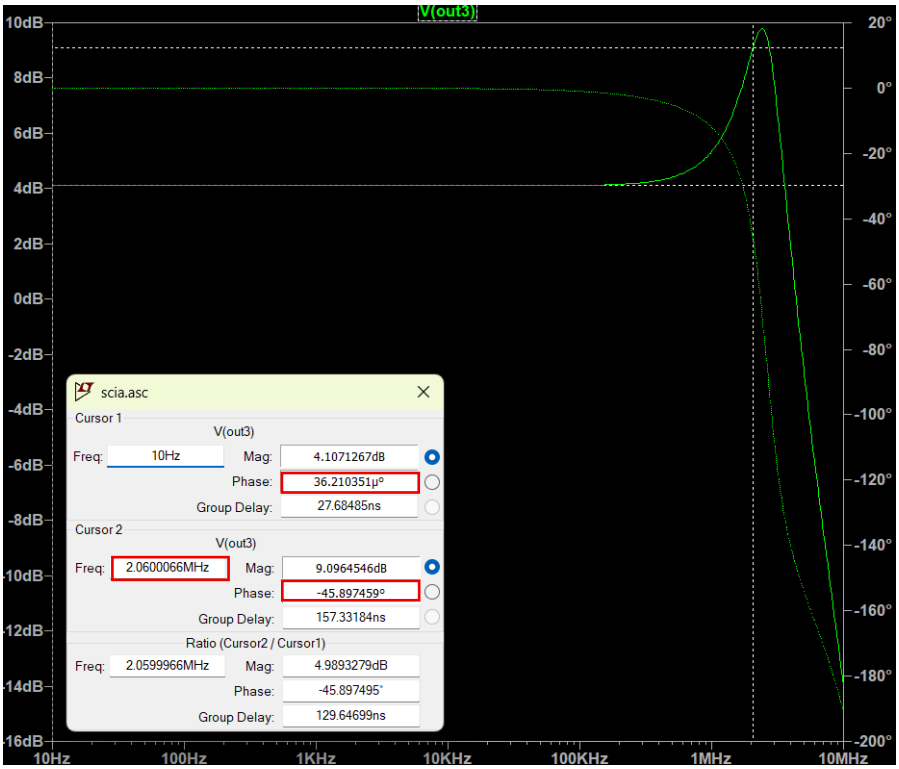

Sw2 - on

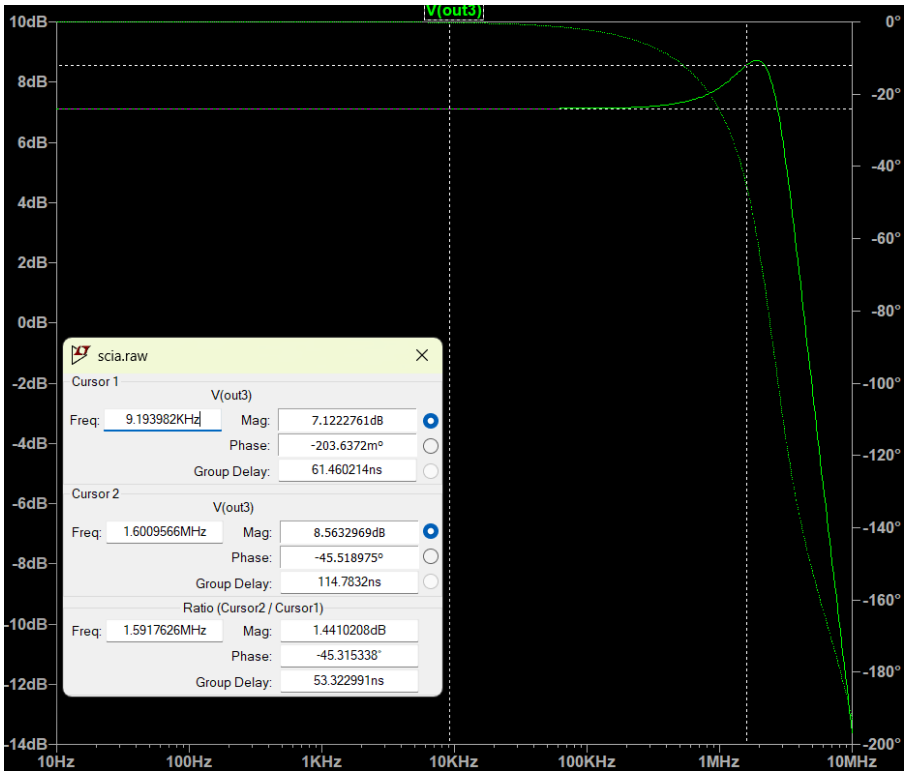
V(out3)
10dB
8dB
6dB
4dB
2dB
0dB
-2dB
-4dB
-6dB
-8dB
-10dB
-12dB
-14dB
0°
-20°
-40°
-60°
-80°
-100°
-120°
-140°
-160°
-180°
-200°
10Hz
100Hz
1KHz
10KHz
100KHz
1MHz
10MHz
scia.raw
Cursor 1
V(out3)
Freq: 9.193982KHz
Mag: 7.1222761dB
Phase: -203.6372m°
Group Delay: 61.460214ns
Cursor 2
V(out3)
Freq: 1.6009566MHz
Mag: 8.5632969dB
Phase: -45.518975°
Group Delay: 114.7832ns
Ratio (Cursor2 / Cursor1)
Freq: 1.5917626MHz
Mag: 1.4410208dB
Phase: -45.315338°
Group Delay: 53.322991ns

Sw3 - on

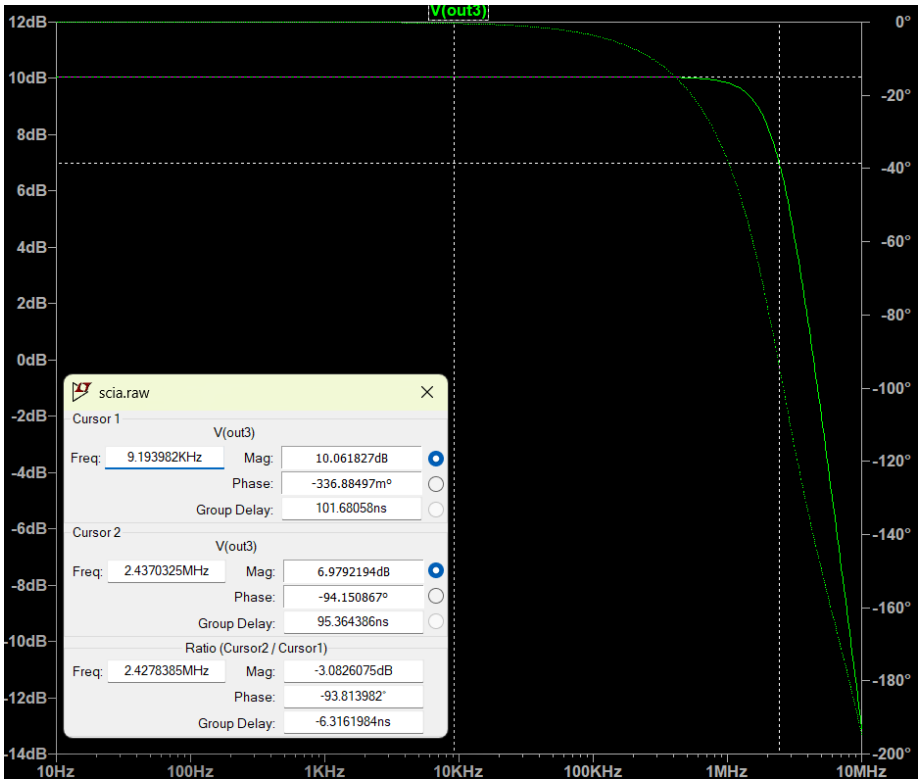
V(out3)
12dB
10dB
8dB
6dB
4dB
2dB
0dB
-2dB
-4dB
-6dB
-8dB
-10dB
-12dB
-14dB
0°
-20°
-40°
-60°
-80°
-100°
-120°
-140°
-160°
-180°
-200°
10Hz
100Hz
1KHz
10KHz
100KHz
1MHz
10MHz
scia.raw
Cursor 1
V(out3)
Freq: 9.193982KHz
Mag: 10.061827dB
Phase: -336.88497m°
Group Delay: 101.68058ns
Cursor 2
V(out3)
Freq: 2.4370325MHz
Mag: 6.9792194dB
Phase: -94.150867°
Group Delay: 95.364386ns
Ratio (Cursor2 / Cursor1)
Freq: 2.4278385MHz
Mag: -3.0826075dB
Phase: -93.813982°
Group Delay: -6.3161984ns

Sw4 - on

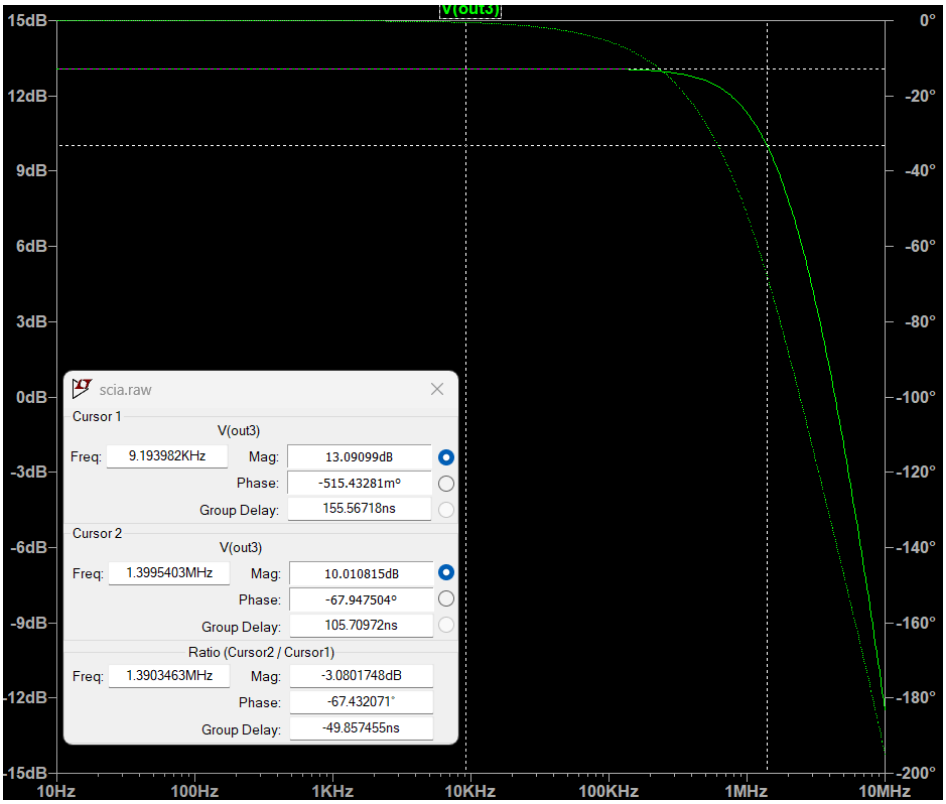

<u>Linearity> specifications for minimum gain and input maximum amplitude (for THD < 1%)</u>

To find the linearity I used the transient analysis and then I applied a sinewave input signal and I checked to see if the output signal keeps the same shape and frequency as the input signal.

If the output signal would not be linear then it would be distorted therefore with the total harmonic distortion measurement I checked the linearity from specifications. If THD < 1% we consider it linear.

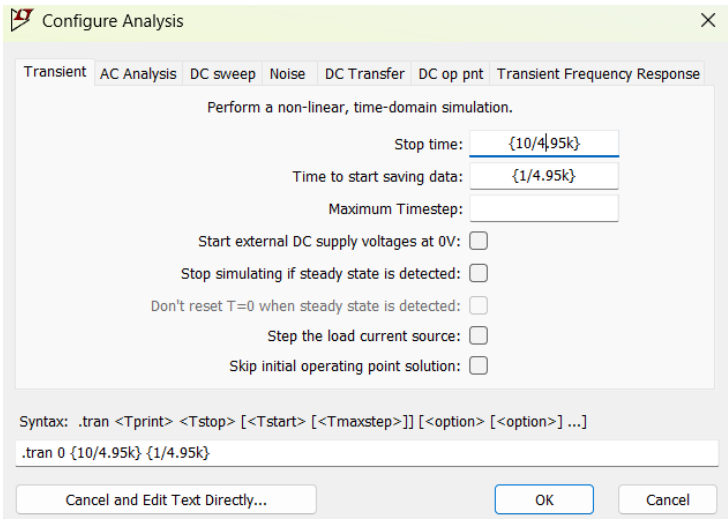

In order to make LTSpice compute the stop time for exactly 10 period of the signal I multiplied the number of periods with the period of the signal which is $\frac{1}{f}$. To avoid taking in consideration the first period, because it's transitory I choose the value for the time to start saving data one period.

I had to change the value from the power supply from 5V to 10V because the operational amplifier is not rail to rail.

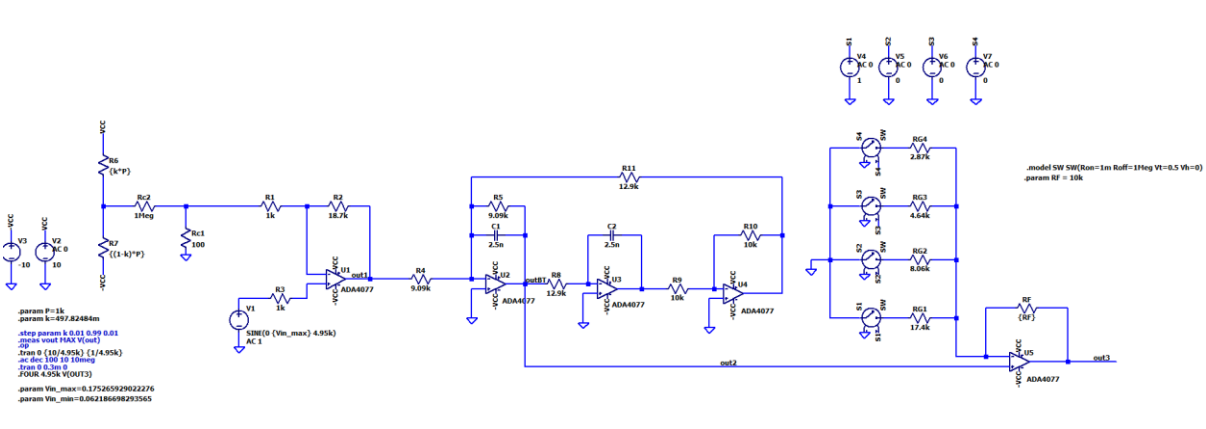

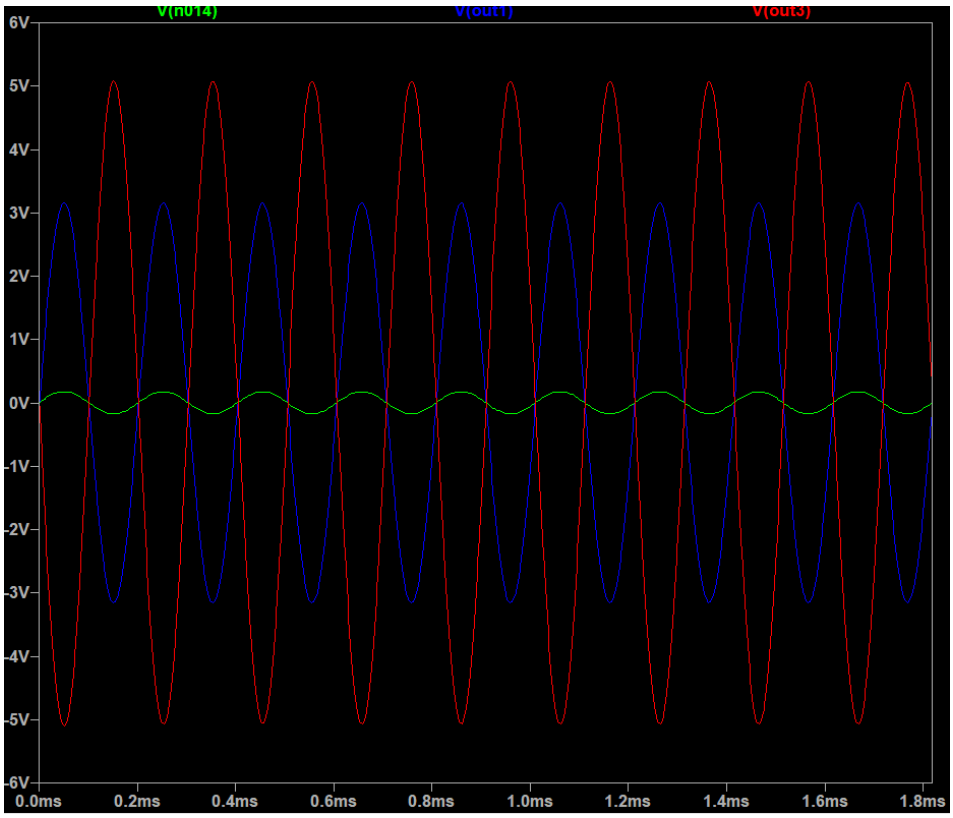

The amplified output signal has an amplitude of 5V.
The value of the total harmonic distortion is 0.013315% which is smaller than 1%. This means that the circuit is linear.

```
Partial Harmonic Distortion: 0.009950%
Total Harmonic Distortion:   0.013315%
```

III. Transient

<u>Linearity > specifications for maximum gain and input minimum amplitude (for THD < 1%)</u>

I had to keep the value of the power supply at 10V because the operational amplifier is not rail to rail.

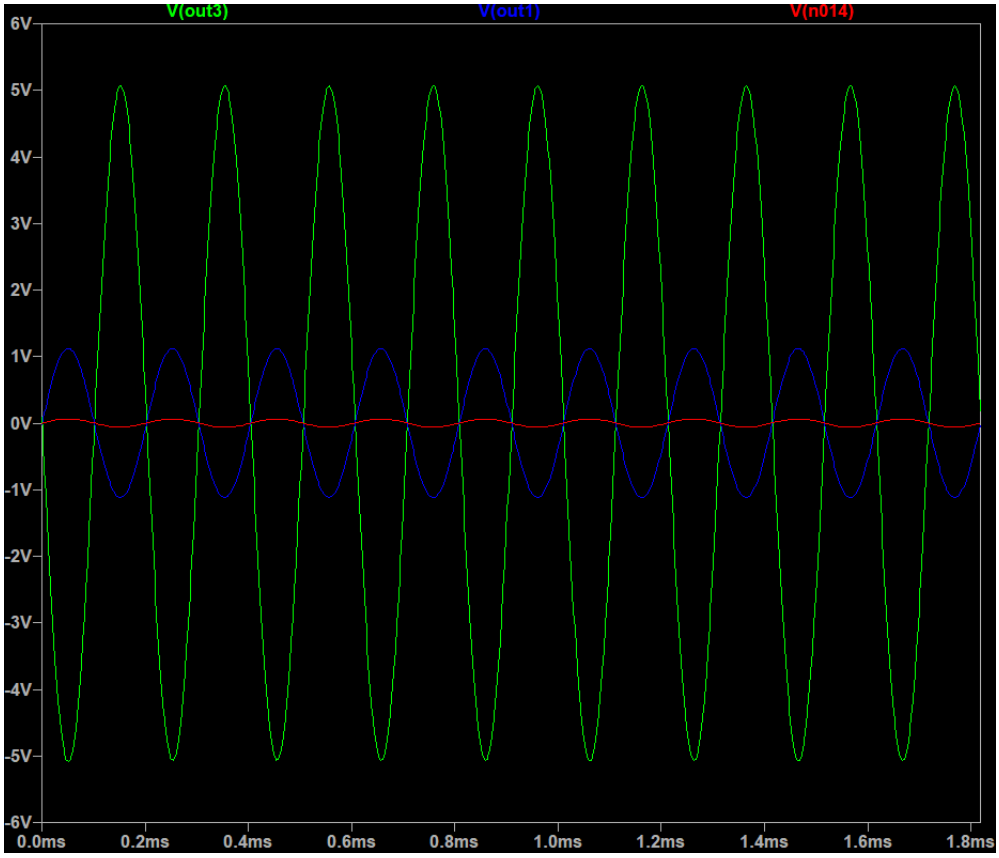

The amplified output signal has an amplitude of 5V.

The value of the total harmonic distortion is 0.045882% which is smaller than 1%. This means that the circuit is linear.

```
Partial Harmonic Distortion: 0.017159%
Total Harmonic Distortion:   0.045882%
```

4. Stage 4: Nonlinear Circuit

Specifications:

Stage 4	
Type stage 4	**|Gain| stage 4 (linear)**
12	1

Requirements:

DC OP	Correct static operating point
DC sweep + transient	Gain = specifications
Transient	Implementing the function of circuit
	Domain of functioning > maximum input amplitude

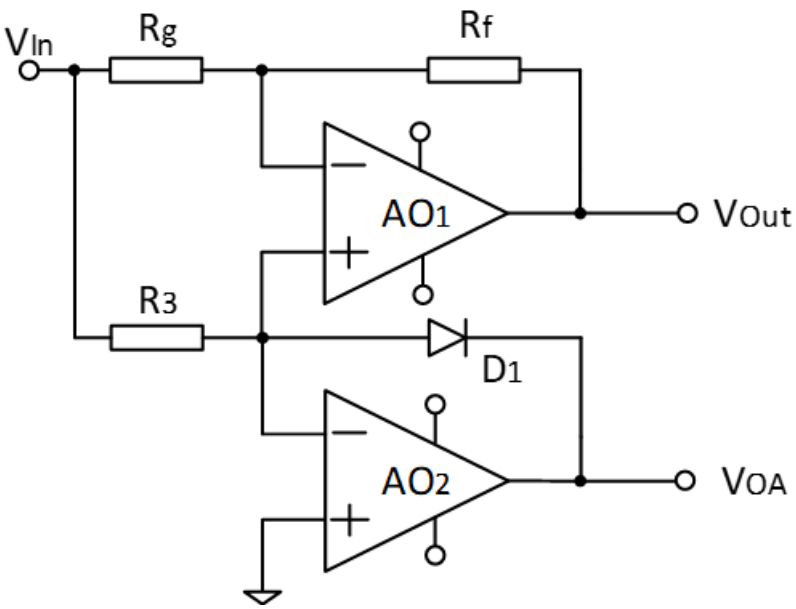

I. DC OP

Correct static operating point

In order to solve the circuit, I firstly assume the diode D1 is off, which means

$$V_{OA} = \begin{cases} V_{OH}, & if\ \ v^+ < v^- \\ V_{OL}, & if\ v^+ > v^- \end{cases}$$

I. $v_{in} < 0 \Rightarrow OA2: v^+ = 0,\ v^- = v_{in} < 0$
$V_{AK} = V_A - V_K = v_{in} - 0 < 0$

II. $v_{in} > 0 \Rightarrow OA2: v^+ = 0,\ v^- = v_{in} > 0$
$V_{AK} = V_A - V_K = v_{in} - 0 > 0$

I.

OA1:

$$\left.\begin{array}{c}\exists NF \Rightarrow v^+ = v^- \\ v^+ = v_{in} \\ v^- = \frac{R_F}{R_G+R_F}\cdot v_{in} + \frac{R_G}{R_G+R_F}\cdot v_{out}\end{array}\right\} \Rightarrow v_{in} = \frac{R_F}{R_G+R_F}\cdot v_{in} + \frac{R_G}{R_G+R_F}\cdot v_{out} \Rightarrow$$

$$\Rightarrow v_{in}\cdot\left(1-\frac{R_F}{R_G+R_F}\right) = \frac{R_G}{R_G+R_F}\cdot V_{out} \Rightarrow v_{in}\cdot\frac{R_G+R_F-R_F}{R_G+R_F}\cdot\frac{R_G+R_F}{R_G} = V_{out} \Rightarrow$$

$$\Rightarrow V_{out} = v_{in} \text{ for } v_{in} < 0$$

II.

OA2:

$$\exists NF \Rightarrow v^+ = v^-$$
$$v^+ = 0$$

OA1:

$$\left.\begin{array}{c}\exists NF \Rightarrow v^+ = v^- \\ v^+ = 0 \\ v^- = \frac{R_F}{R_G+R_F}\cdot v_{in} + \frac{R_G}{R_G+R_F}\cdot v_{out}\end{array}\right\} \Rightarrow \frac{R_F}{R_G+R_F}\cdot v_{in} + \frac{R_G}{R_G+R_F}\cdot v_{out} = 0 \Rightarrow$$

$$\Rightarrow V_{out}\cdot\frac{R_G}{R_G+R_F} = -\frac{R_F}{R_G+R_F}\cdot v_{in} \Rightarrow V_{out} = -\frac{R_G+R_F}{R_G}\cdot\frac{R_F}{R_G+R_F}\cdot v_{in} \Rightarrow V_{out} = -\frac{R_F}{R_G}\cdot v_{in} \Rightarrow$$

$$\Rightarrow V_{out} = -\frac{R_F}{R_G}\cdot v_{in} \text{ for } v_{in} > 0$$

$$V_{out} = \begin{cases} v_{in}, & \text{if } v_{in} < 0 \\ -\dfrac{R_F}{R_G}\cdot v_{in}, & \text{if } v_{in} > 0 \end{cases}$$

After performing the op analysis, I obtained the value of the output voltage of the third stage which is centered around 0.

```
V(out4):        -1.91597e-06   voltage
```

II. DC sweep + transient

<u>Gain = specifications</u>

In order to find the gain I performed the DC sweep analysis and because of the operational amplifiers I obtained convergence errors and the simulation got stuck in an infinite loop.

The operational amplifier used in the simulation have problems when voltage from the simulation was around 5 volts and it kept oscillating around that value.

I performed the transient analysis with a triangular signal then I changed the Ox from time to voltage which represents the input voltage.

The peak of the graph is centered around the middle of the voltage domain, which is around 0V, although there is a glitch.

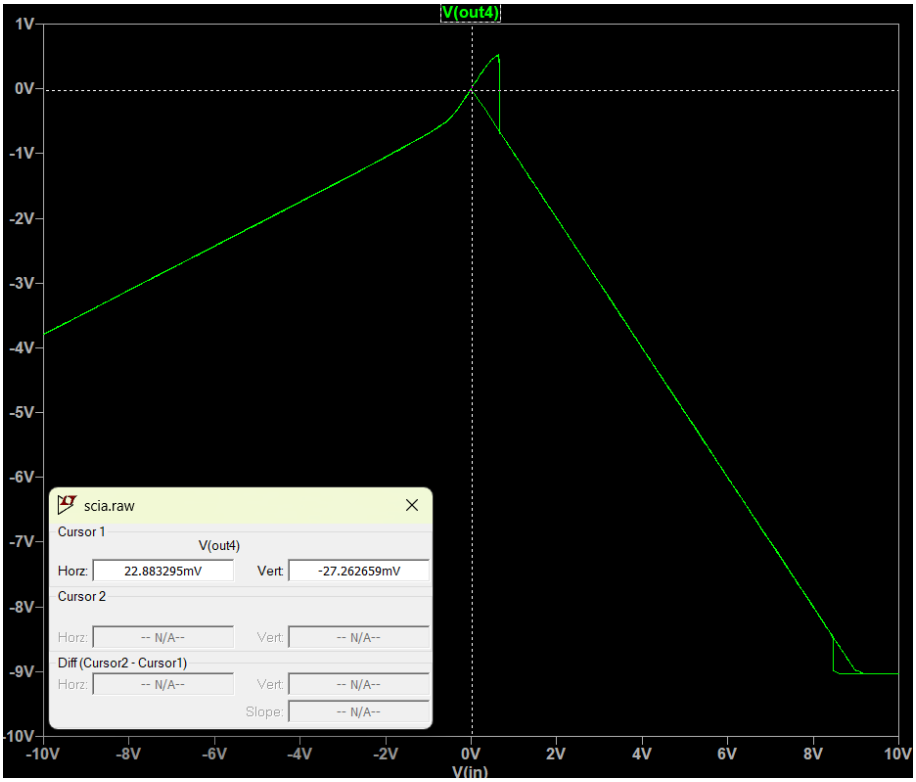

The value of the gain is 1 for the right side of the graph and in the left side the value is close to 1, although it is not perfect because of the limitations of the amplifier.

The signal V(out4) should have the amplitude as V(out3) but due to the slew rate limitation of the operational amplifier the signal can't reach that value and it is distorted.

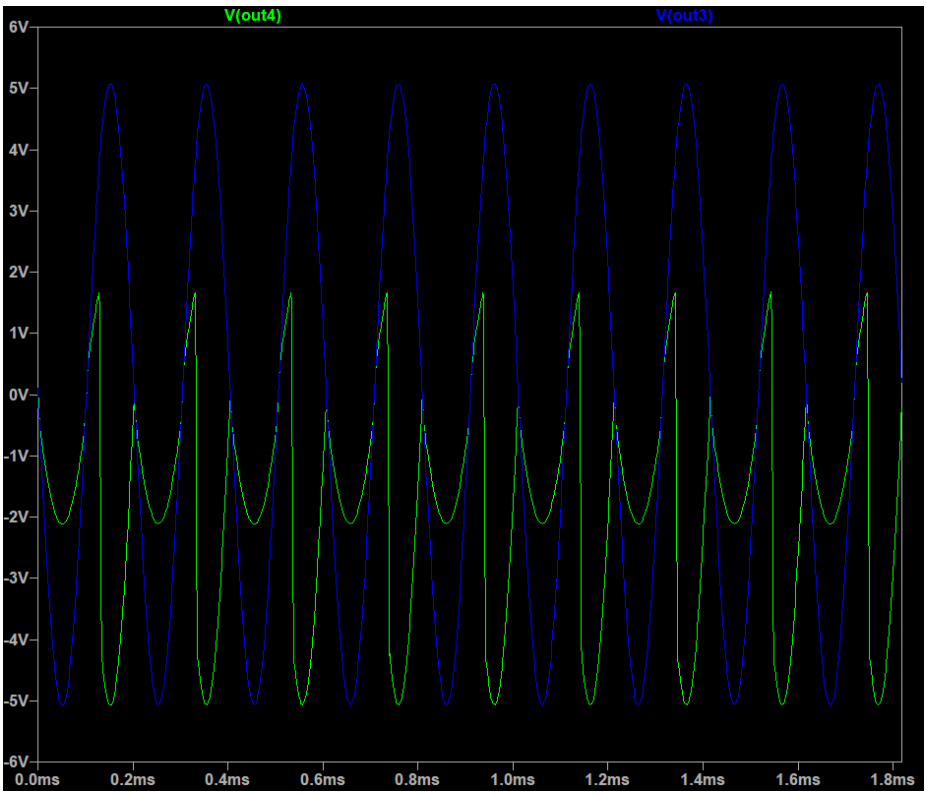

After implementing the circuit with ideal operational amplifiers I obtained the expected shape of the signal that I determined. So because the signals have the same amplitude the gain is $1\frac{V}{V}$ like in the specifications.

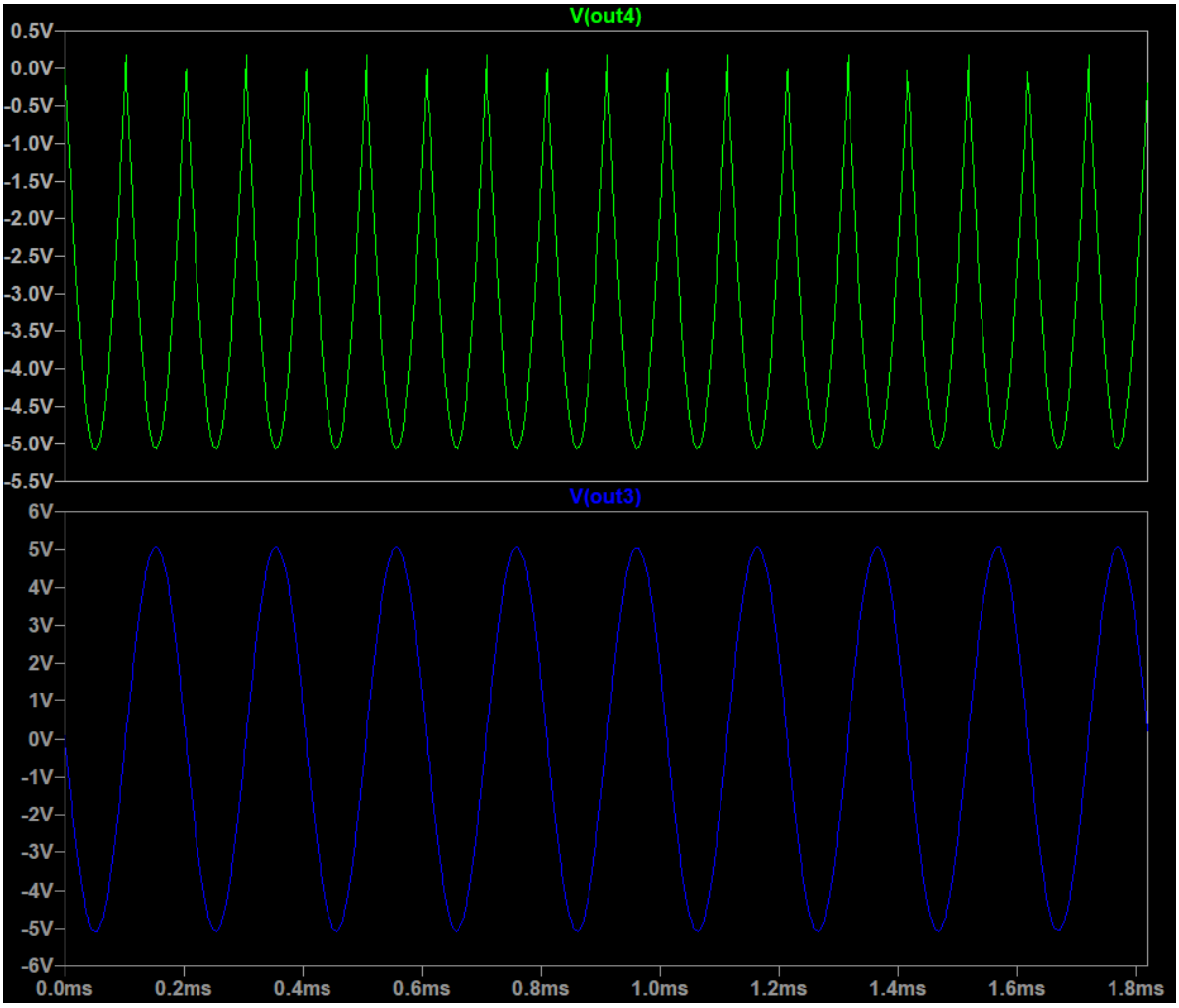

III. Transient

Implementing the function of circuit

In order to prove the functioning of the circuit I performed the DC sweep analysis and the function of the circuit is represented by the next equation.

$$V_{out} = \begin{cases} v_{in}, & \text{if } v_{in} < 0 \\ -\dfrac{R_F}{R_G} \cdot v_{in}, & \text{if } v_{in} > 0 \end{cases}$$

The graphic below respects the equation, because in the negative part of the Ox axis which represents the input voltage the slope of the graphic is negative 1 and for the positive part of Ox the slope is negative because of the minus sign from the gain formula.

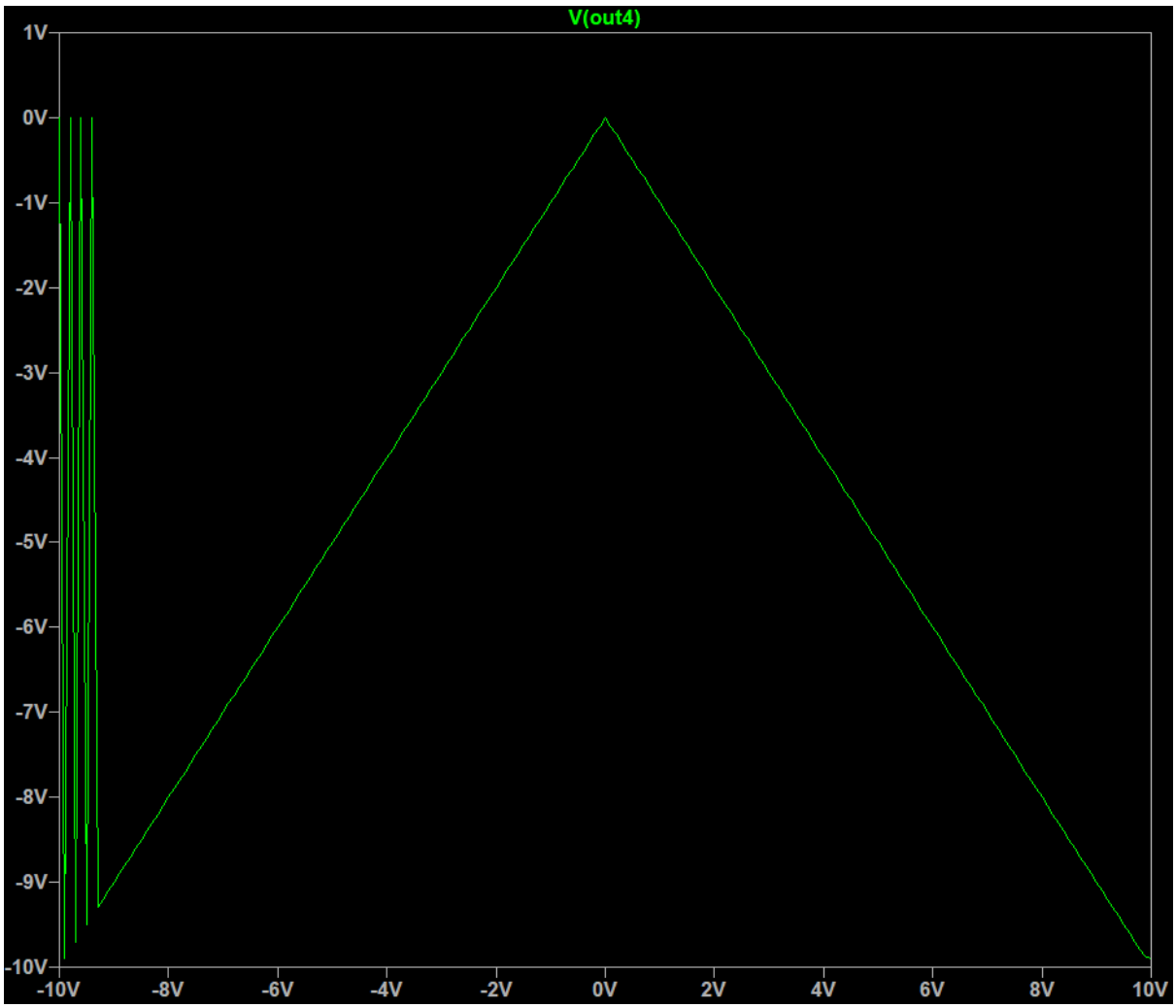

Domain of functioning > maximum input amplitude

The domain of functioning is represented by the interval [-5, 5] and the circuit works for the specified domain but also for the values bigger than the interval, as it can be seen in the picture.

5. The complete circuit

Each block was tested before and below I attached the complete circuit to show that the stages can also work when cascaded, not just individually.

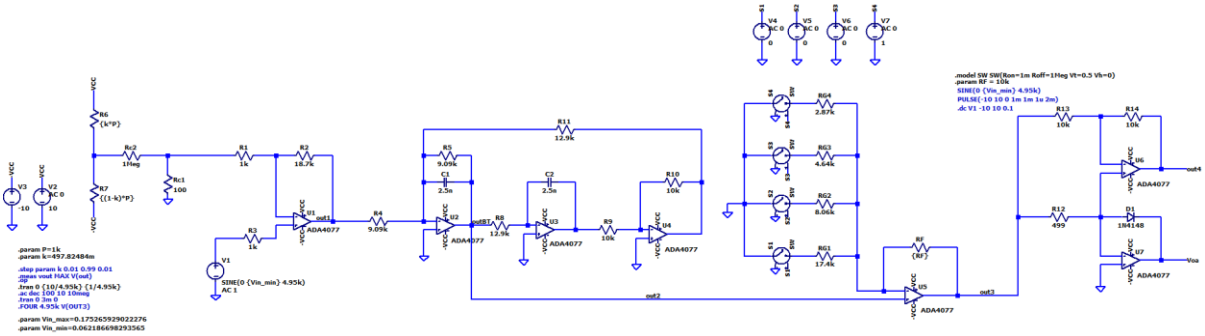
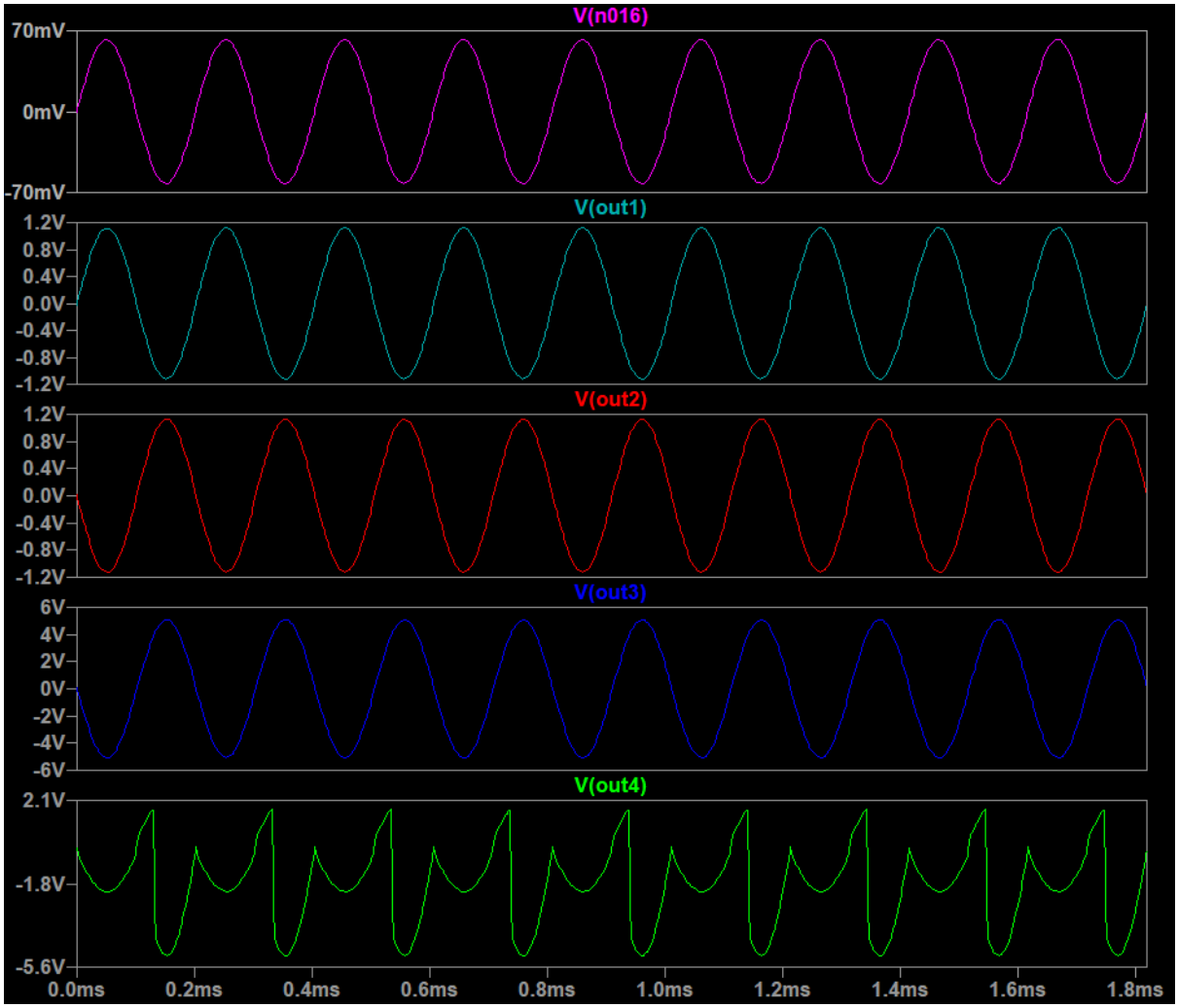
Below are the outputs of each stage of the working circuit.