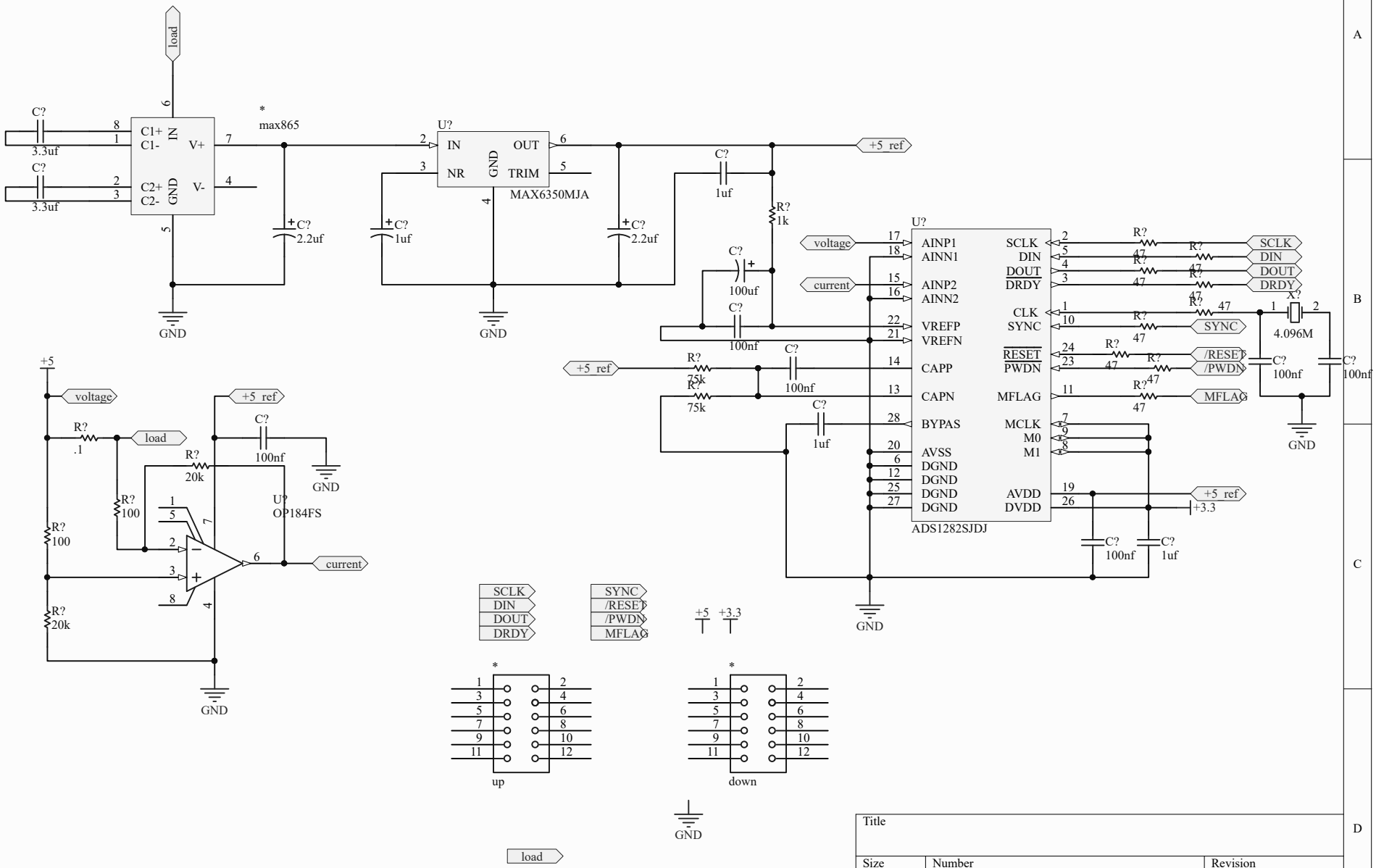

Title		
Size A4	Number	Revision
Date: 29.03.2016		Sheet of
File: sensorboard.SchDoc		Drawn By: