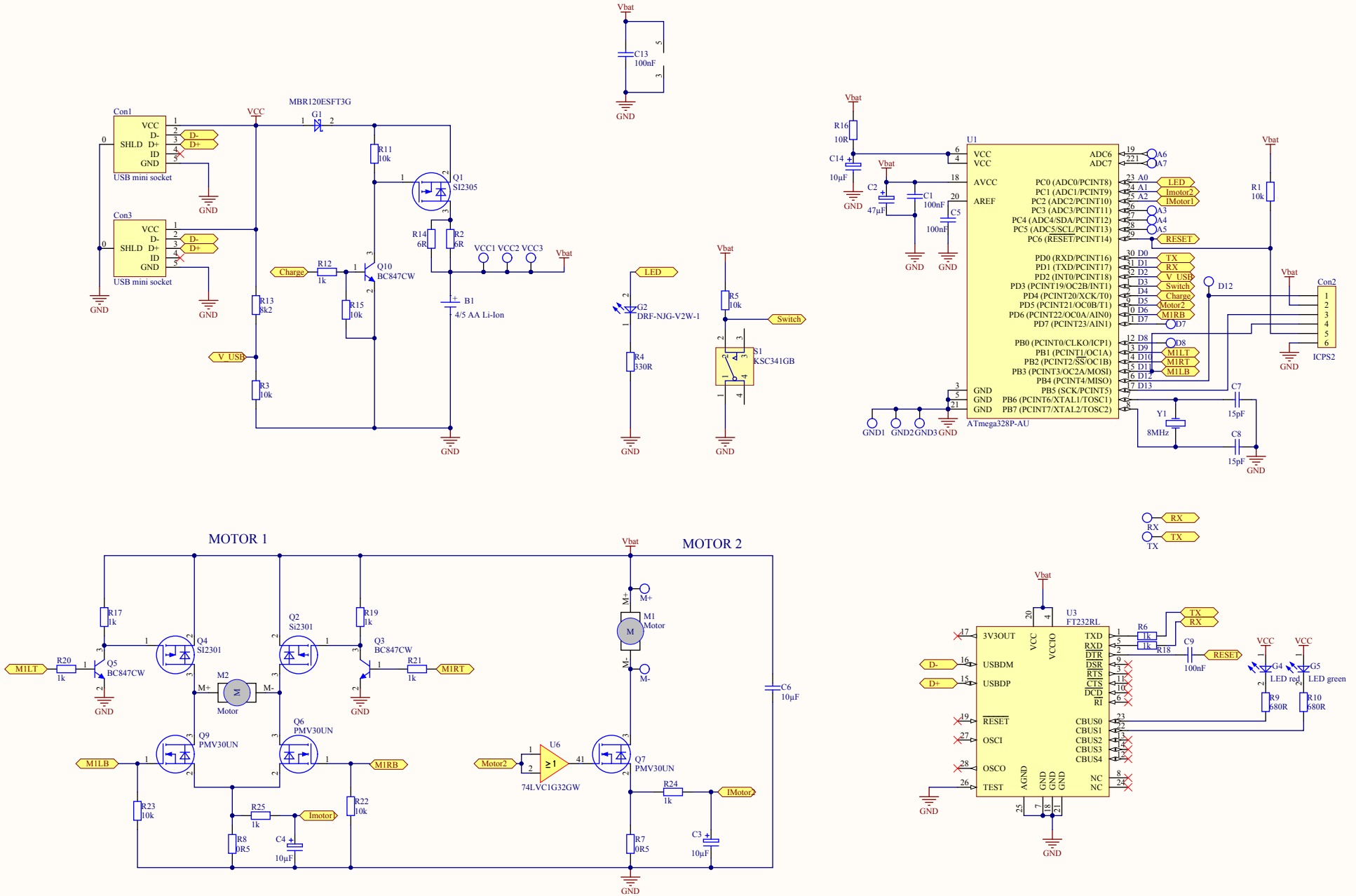

Board design derived from Arduino Nano 3.0 by Philips Consumer Lifestyle
Copyright 2012 under the Creative Commons Attribution-ShareAlike 3.0
http://creativecommons.org

Title		
Size A3	Number	Revision
Date: 21-1-2014		Sheet of
File: V:\altium-projects\..\Modular-shaver Arduino.SchDoc		Drawn by: