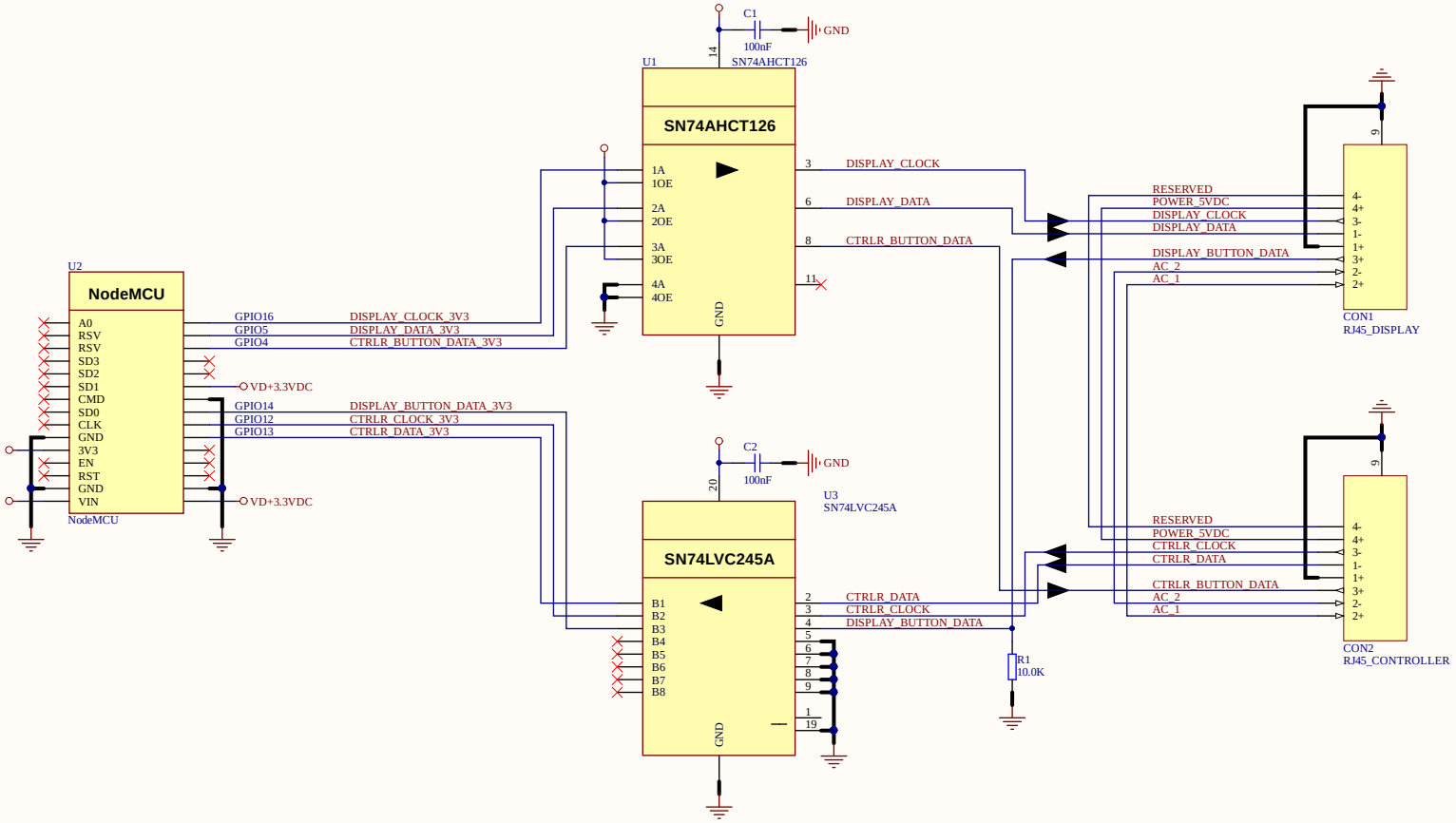

Title		
Size A3	Number	Revision
Date: 20-Nov-19	Sheet of	
File: E:\Development\..\Balboa Spa - NodeMCU.SchDoc	Drawn By:	

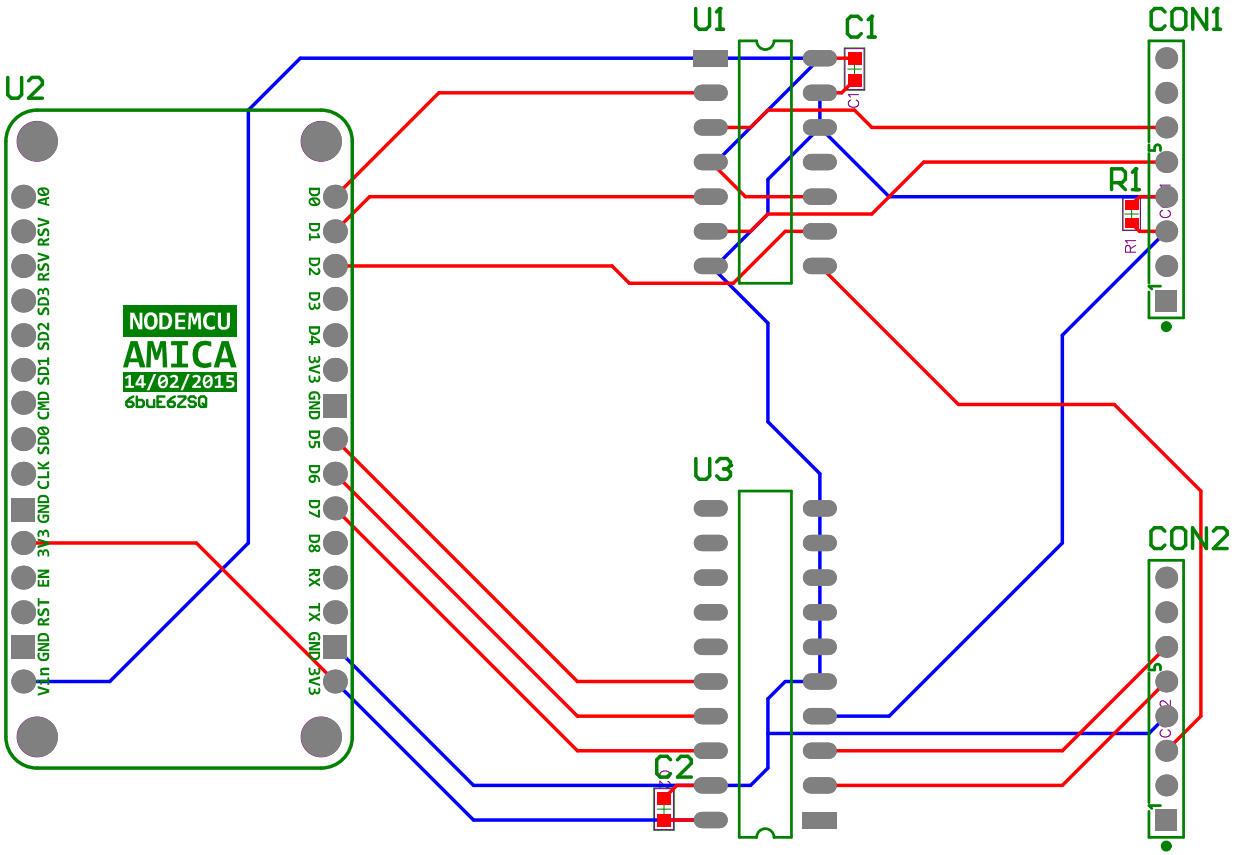
U2
NODEMCU
AMICA
14/02/2015
6buE6ZSQ
A0
RSV
RSV
SD3
SD2
SD1
CMD
SD0
CLK
GND
3V3
EN
RST
GND
Vin
D0
D1
D2
D3
D4
3V3
GND
D5
D6
D7
D8
RX
TX
GND
3V3
U1
C1
U3
C2
CON1
R1
CON2