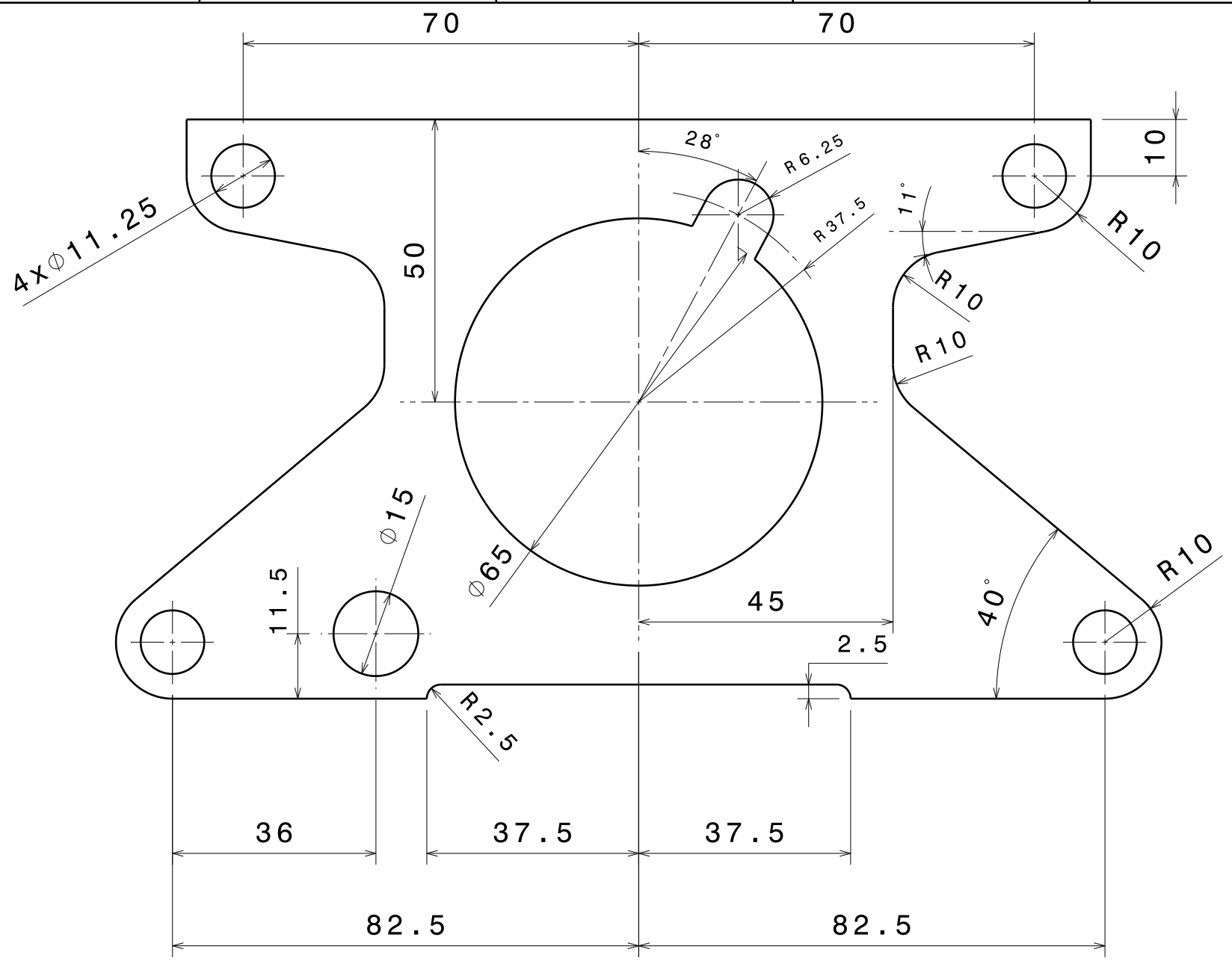

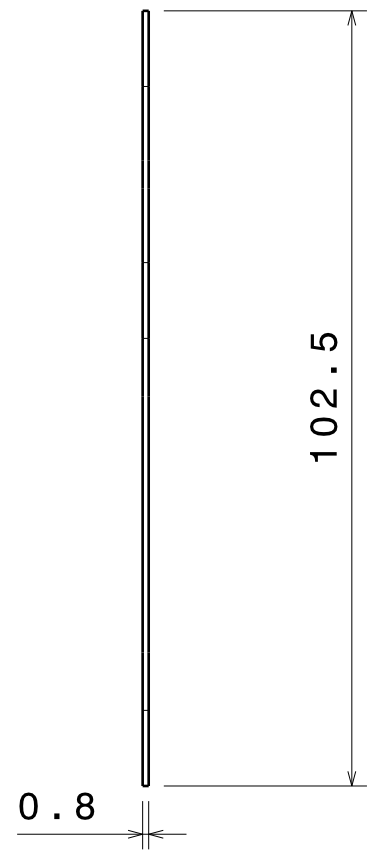

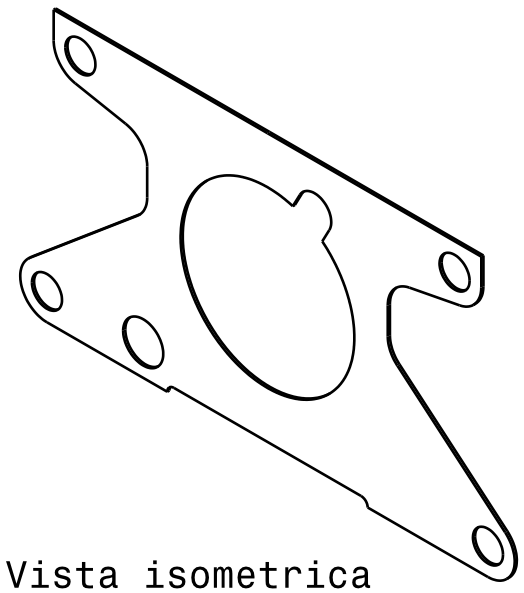

Vista isometrica
Scala: 1:2

DESIGNED BY: Emmanuel Patellaro		Prototipazione Virtuale	
DATE: 09/11/2024			
CHECKED BY: Prof. Di Gironimo			
DATE: XXX			
SIZE A3		Università di Napoli Federico II	
SCALE 1:1	WEIGHT (kg) XXX	DRAWING NUMBER PV2425ES0104	SHEET 1/1

This drawing is our property; it can't be reproduced or communicated without our written agreement.