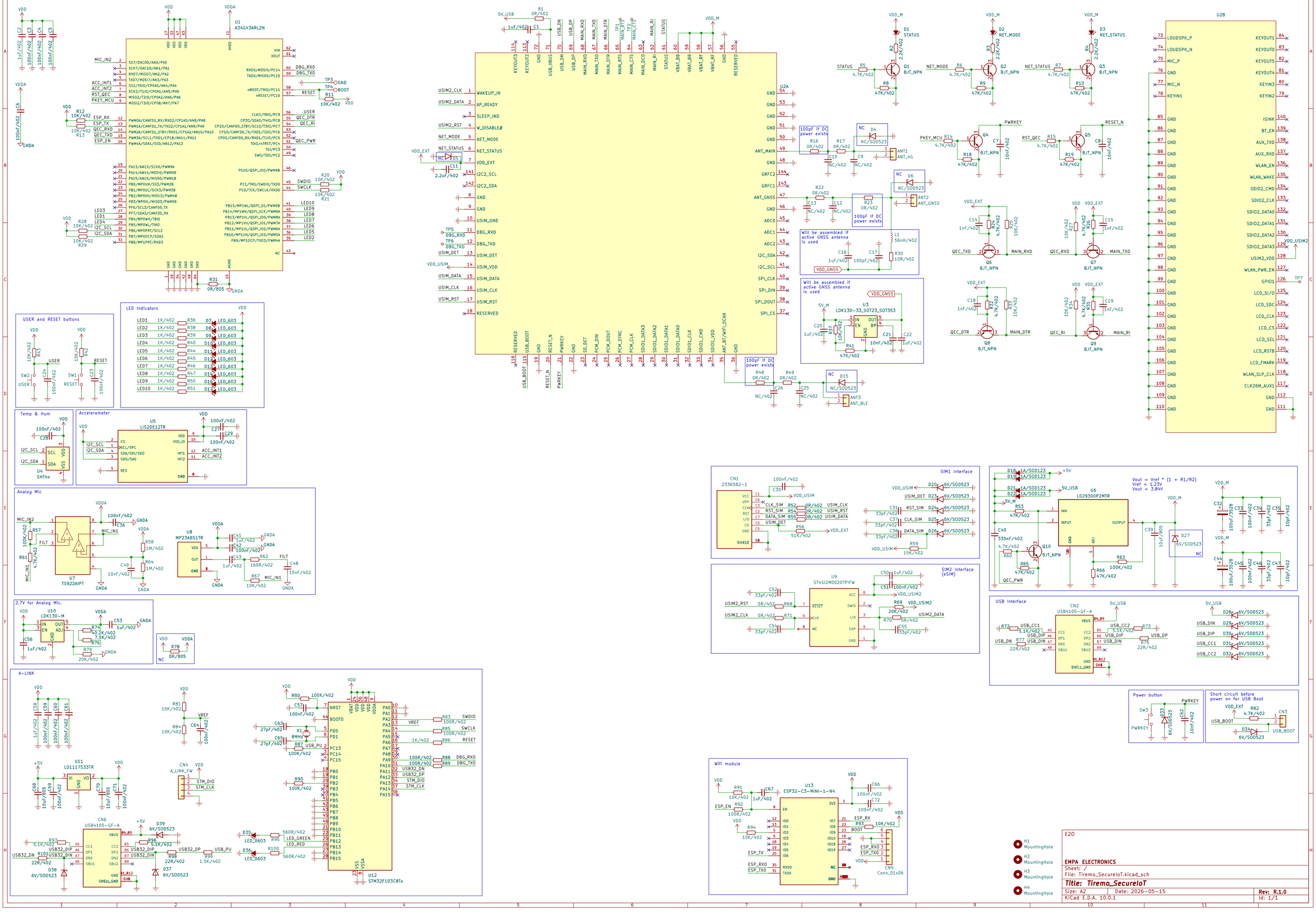

U1
A34G43ARL2N
U2A
U2B
U3
LDK130-33_SOT23_SOT353
U5
LIS2DE12TR
U4
SHT4x
U7
TS922AIPT
U8
MP23ABS1TR
U10
LDK130-M
U11
LD1117S33TR
U12
STM32F103C8Tx
U13
ESP32-C3-MINI-1-N4
U6
LD29300P2MTR
U9
ST4SI2M0020TPIFW
CN1
2336582-1
CN2
USB4105-GF-A
CN3
CN4
A_LINK_FW
CN5
Conn_01x06
CN6
USB4105-GF-A
USB Interface
Power button
Short circuit before power on for USB Boot
Wifi module
USER and RESET buttons
LED Indicators
Temp & Hum
Accelerometer
Analog Mic
2.7V for Analog Mic.
A-LINK
SIM1 Interface
SIM2 Interface (eSIM)
Will be assembled if active GNSS antenna is used
100pF if DC power exists
Vout = Vref * (1 + R1/R2)
Vref = 1.23V
Vout = 3.84V
H1 MountingHole
H2 MountingHole
H3 MountingHole
H4 MountingHole
E20
EMPA ELECTRONICS
Sheet: /
File: Tiremo_SecureIoT.kicad_sch
Title: Tiremo_SecureIoT
Size: A2
Date: 2026-05-15
Rev: R.1.0
KiCad E.D.A. 10.0.1
Id: 1/1