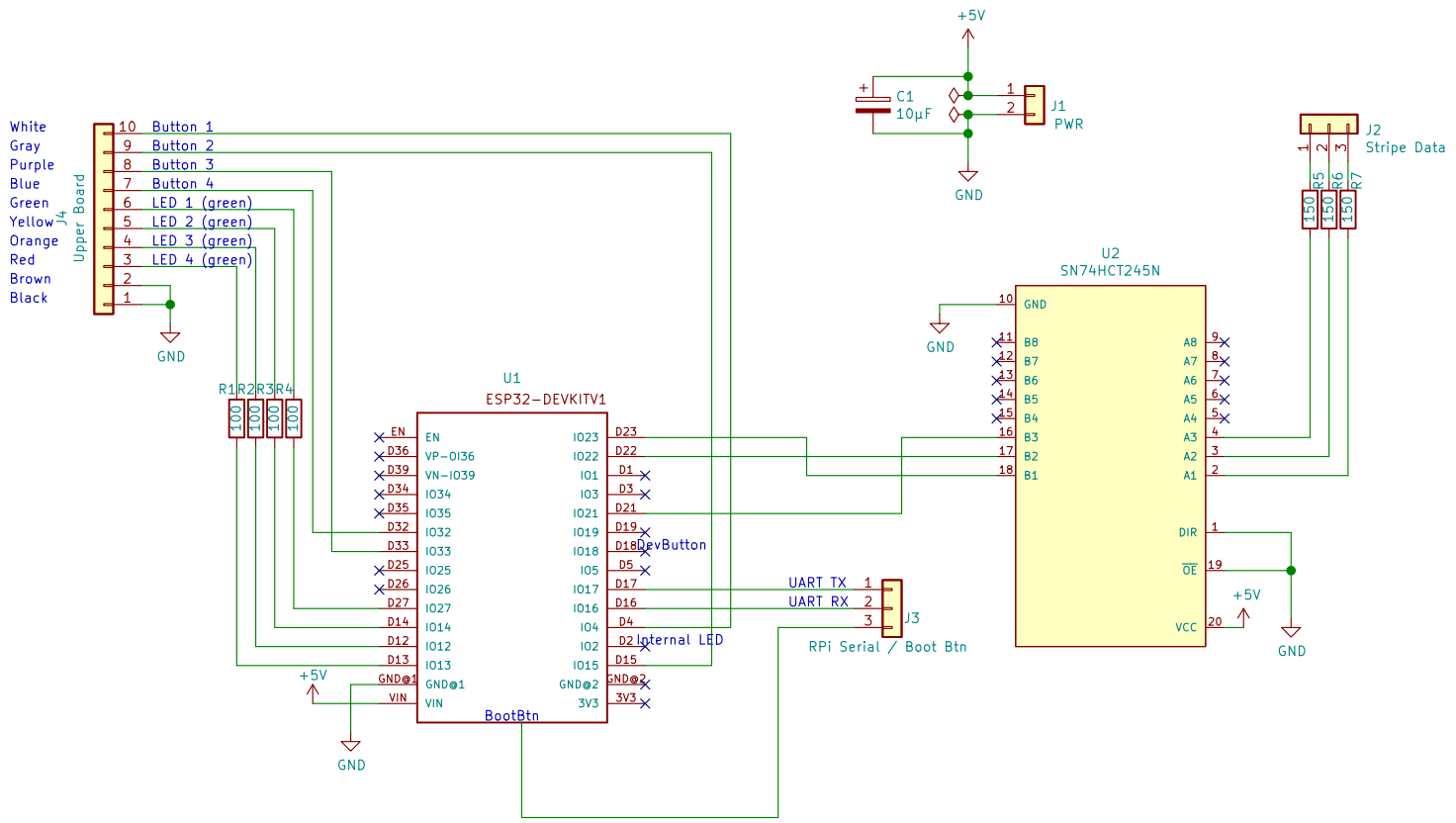

Matthis Hauschild

Sheet: /

File: espboard.sch

Title: Partyraum Ledding

Size: A4	Date: 2021-10-29	**Rev: 1**
KiCad E.D.A. eeschema 5.1.9+dfsg1-1		Id: 1/1