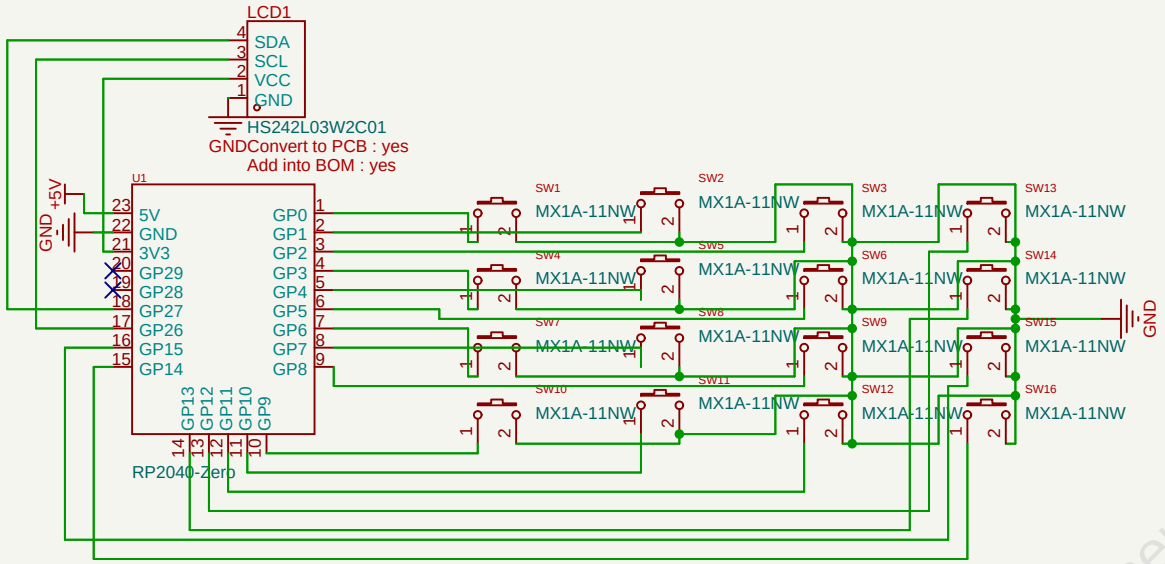

MechCalculatorPCB3Schematic2.P1

Schematic	Schematic2	Create at	2025-01-22
		Update at	2025-01-23
Board	PCB3	Page	P1
Drawn		MechCalculator	
Reviewed			
		Version	Size	Page 1 Total 1
EasyEDA		V1.0	A4	EasyEDA.com