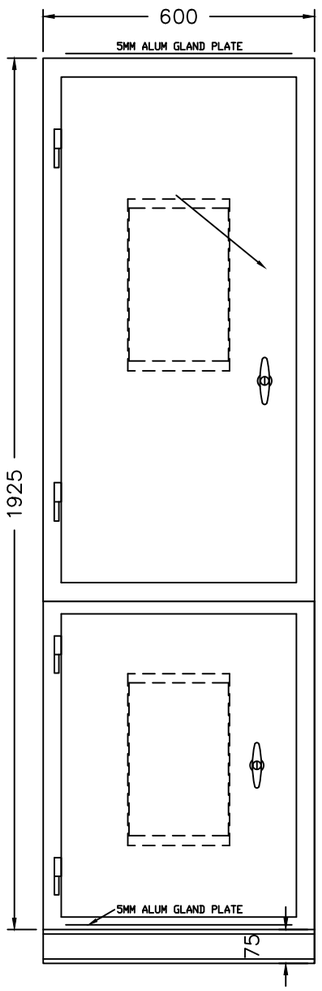

FRONT ELEVATION

AC-DB-1

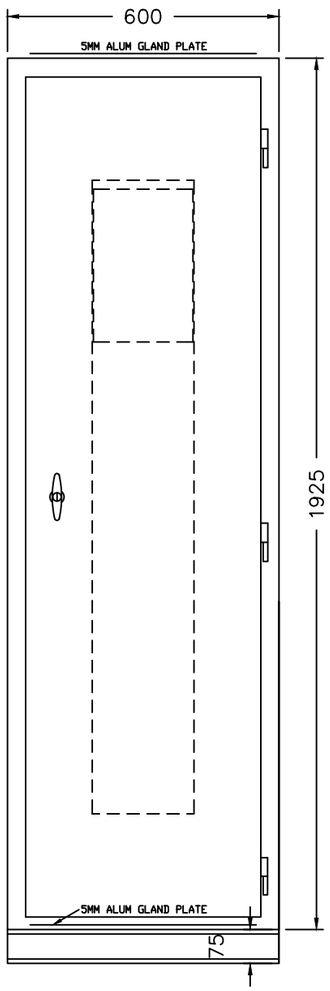

FRONT ELEVATION

DC-DB-1

NOTE
THESE CABINETS WILL
SIT SIDE BY SIDE

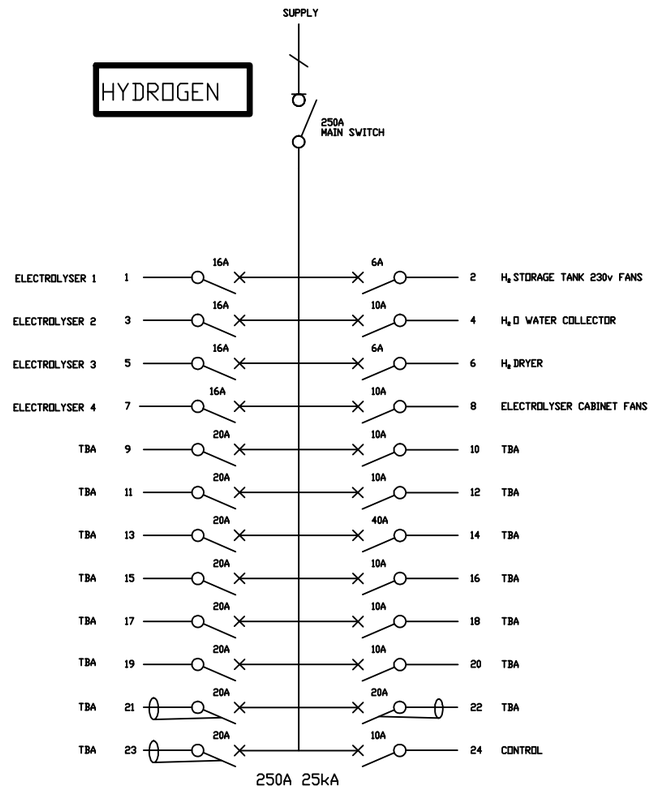

CONSTRUCTION NOTES

IDENTIFICATION PLATE

MANUFACTURER	R.G.LADD 2024
IDENTIFICATION No.	HYDROGEN-DB
SERIAL No.	RGL50061-01
SEPARATION	AS 61439.1 FORM 1
RATED CURRENT	160 AMPS
RATED VOLTAGE	415 VOLT, 50Hz
DEGREE OF PROTECTION	AS 1939 IP 54
SERVICE CONDITIONS	POLLUTION DEGREE 3
DIMENSIONS	600(w)x2000(h)x350(d)

REMOVAL OF THIS LABEL CONTRAVENES AS3000

CONSTRUCTION NOTES

CUBICLE

3mm ALUMINUM SHEET
PLINTH 75X40 DURAGAL CHANNEL
CONSTRUCTED TO AS61439.1: FORM 1
DEGREE OF PROTECTION: IP54

GEAR PANEL

2mm ZINC ANNEAL STEEL SHEET

DOOR

3mm ALUMINUM SHEET
20mm x 6mm POLYETHYLENE FOAM SEAL
CHROMED LIFT-OFF BLOCK HINGES
CHROMED TEE HANDLE WITH CL001 LOCK

200mm WIDE STIFFENER
CIRCUIT CARD HOLDER

FINISH

POWDER COAT PROCESS
EXTERIOR &:- X15 ORANGE
INTERIOR X15 ORANGE
GEAR PANEL:- WHITE
UPPER DOOR:- X15 ORANGE
LOWER DOOR:- X15 ORANGE
PLINTH:- X15 ORANGE

LABELS

ENGRAVED ON NON-GLARE GRAVOPLY
BLACK LETTERING ON WHITE SURFACE

DWG STATUS	AS INSTALLED DATE INITIALS						
	WORKSHOP DATE INITIALS						
		A	CONCEPT	NGP		20.12.23	
		REV.	AMENDMENT DESCRIPTION	DRN	CHKD	DATE	

TITLE: HYDROGEN TRAILER
TRAILER INTERNAL DISTRIBUTION BOARD

SWITCHBOARD LAYOUT

SHEET 1 OF 3

CLIENT: GreenRen Power

R.G.LADD Pty.Ltd.
ELECTRICAL ENGINEERS
& SWITCHBOARD MANUFACTURERS
207 COLCHESTER RD, KILSYTH, VIC 3137
Ph.(03)8720 8100 Fax.(03)9017 8982

DRAWN: NGP	CHECKED: TBA
DATE: 20.12.23	PREPARED BY: NGP
DWG No. RGL50061/001/001	REVISION: A

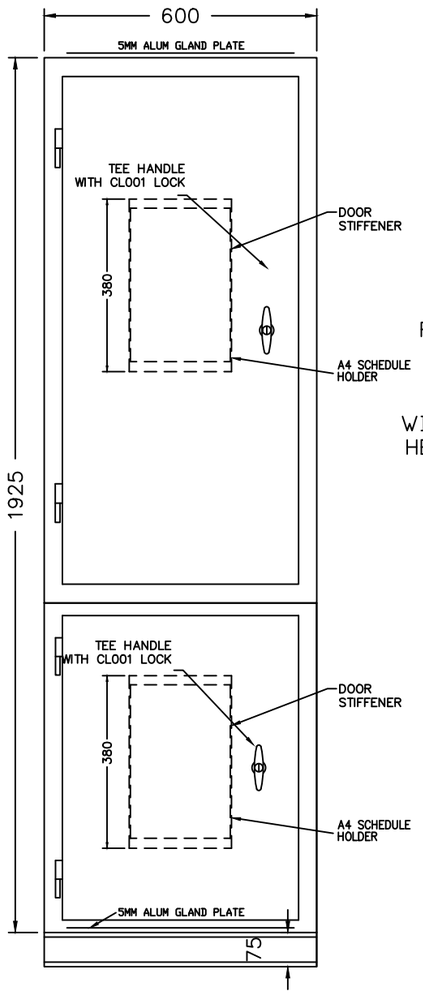

FRONT ELEVATION

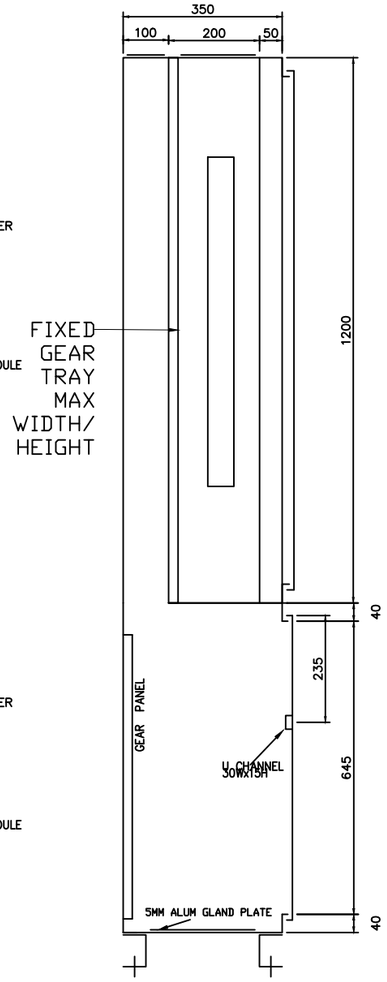

SECTION 'AA'

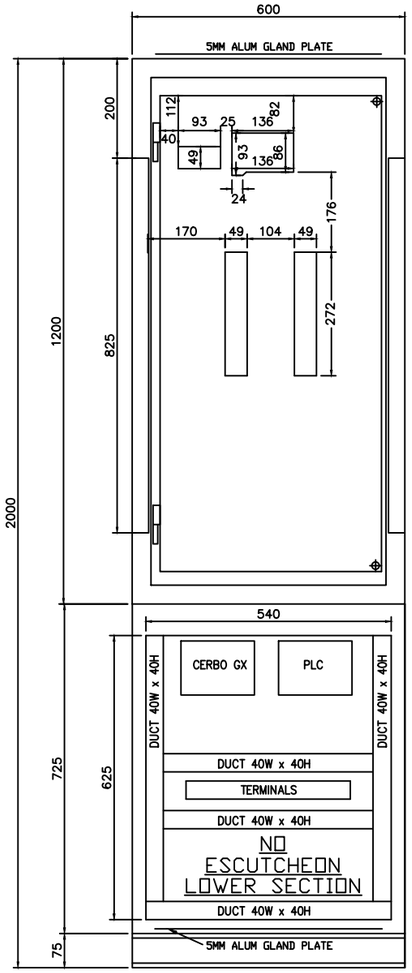

TYPICAL AC ESCUTCHEON LAYOUT

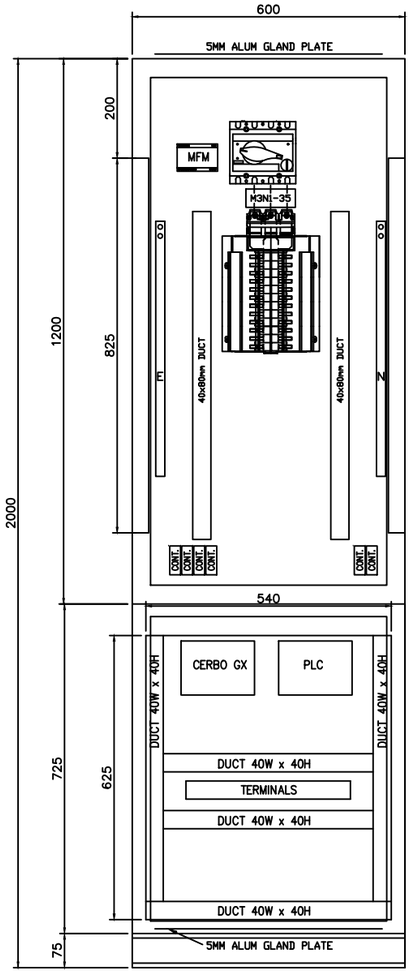

TYPICAL AC GEAR PANEL LAYOUT

AC-DB-1

DWG STATUS	AS INSTALLED	DATE	INITIALS						
	WORKSHOP	DATE	INITIALS						
				A	CONCEPT	NGP		20.12.23	
				REV.	AMENDMENT DESCRIPTION	DRN	CHKD	DATE	

TITLE: HYDROGEN TRAILER
TRAILER INTERNAL DISTRIBUTION BOARD
AC-DB-1
SWITCHBOARD LAYOUT

SHEET 2 OF 3

CLIENT: GreenRen Power

R.G.LADD Pty.Ltd.
ELECTRICAL ENGINEERS
& SWITCHBOARD MANUFACTURERS
207 COLCHESTER RD, KILSYTH, VIC 3137
Ph.(03)8720 8100 Fax.(03)9017 8982

DRAWN: NGP	CHECKED: TBA
DATE: 20.12.23	PREPARED BY: NGP
DWG No. RGL50061/001/002	REVISION: A

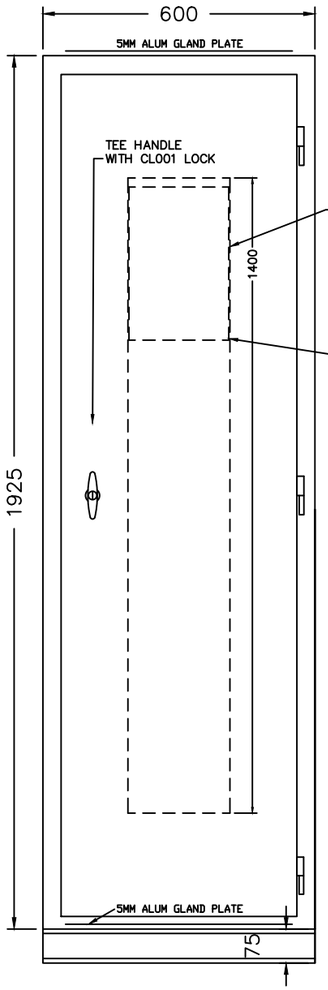

FRONT ELEVATION

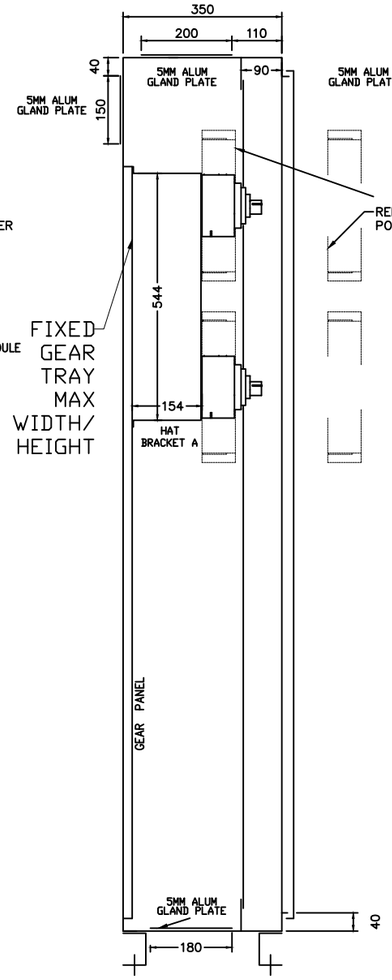

SECTION 'AA'

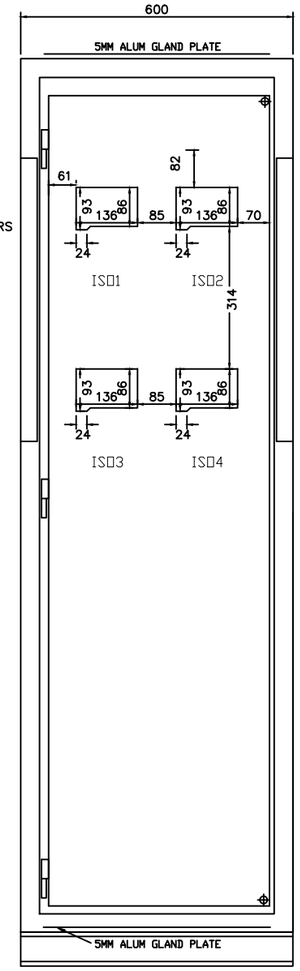

TYPICAL DC
ESCUTCHEADN LAYOUT

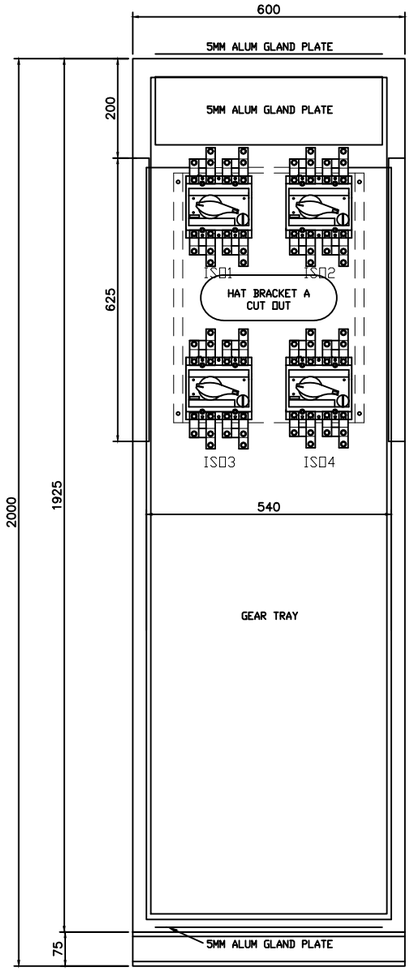

TYPICAL DC
GEAR PANEL LAYOUT

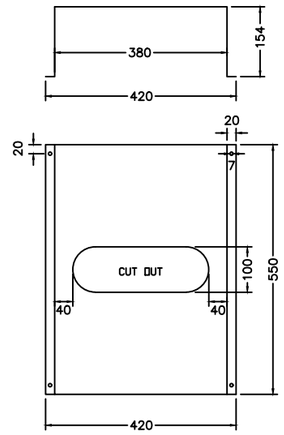

HAT BRACKET A

DC-DB-1

DWG STATUS	AS INSTALLED DATE INITIALS
	WORKSHOP DATE INITIALS

REV.	AMENDMENT DESCRIPTION	DRN	CHKD	DATE
A	CONCEPT	NGP		20.12.23

TITLE: HYDROGEN TRAILER
TRAILER INTERNAL DISTRIBUTION BOARD

SWITCHBOARD LAYOUT

SHEET 3 OF 3

CLIENT: GreenRen Power

R.G.LADD Pty.Ltd.
ELECTRICAL ENGINEERS
& SWITCHBOARD MANUFACTURERS
207 COLCHESTER RD, KILSYTH, VIC 3137
Ph.(03)8720 8100 Fax.(03)9017 8982

DRAWN: NGP	CHECKED: TBA
DATE: 20.12.23	PREPARED BY: NGP
DWG No. RGL50061/001/003	REVISION: A

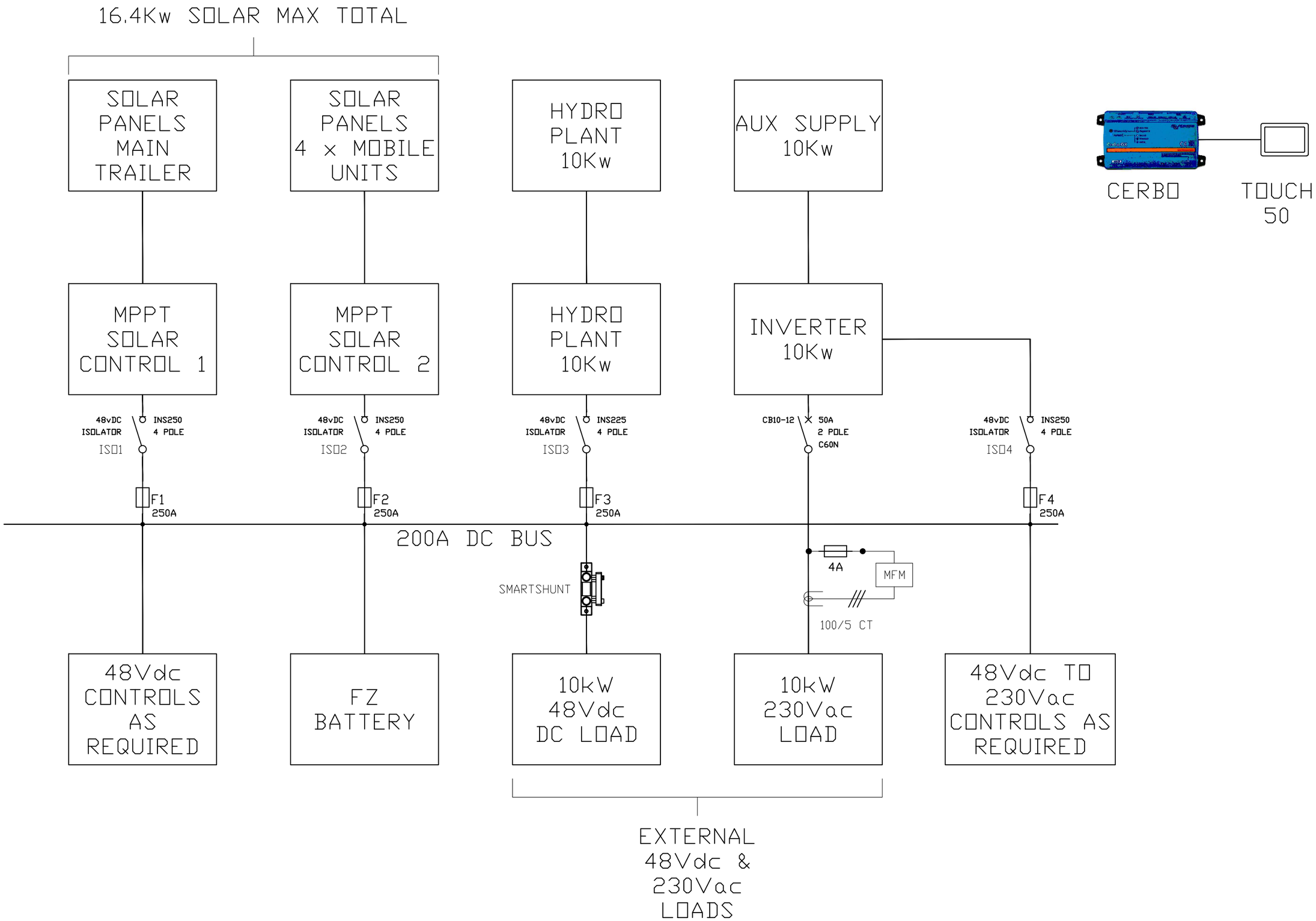

DWG STATUS										
	AS INSTALLED	DATE TBA	INITIALS TBA							
	WORKSHOP	DATE TBA	INITIALS TBA							
				A	PRELIMINARY DRAWINGS	NGP		7.12.23		
				REV.	AMENDMENT DESCRIPTION	DRN	CHKD	DATE		

TITLE: HYDROGEN TRAILER
VARIOUS
SLD &
BLOCK DIAGRAM

SHEET 1 OF 9

CLIENT: COVERTEL/GREENREN

R.G.LADD Pty.Ltd.
ELECTRICAL ENGINEERS
& SWITCHBOARD MANUFACTURERS
207 COLCHESTER RD, KILSYTH, VIC 3137
Ph.(03)8720 8100 Fax.(03)9017 8982

DRAWN: NGP	CHECKED:	
DATE: 7.12.23	PREPARED BY: NGP	
DWG No. RGL50061/003/001		REVISION: A

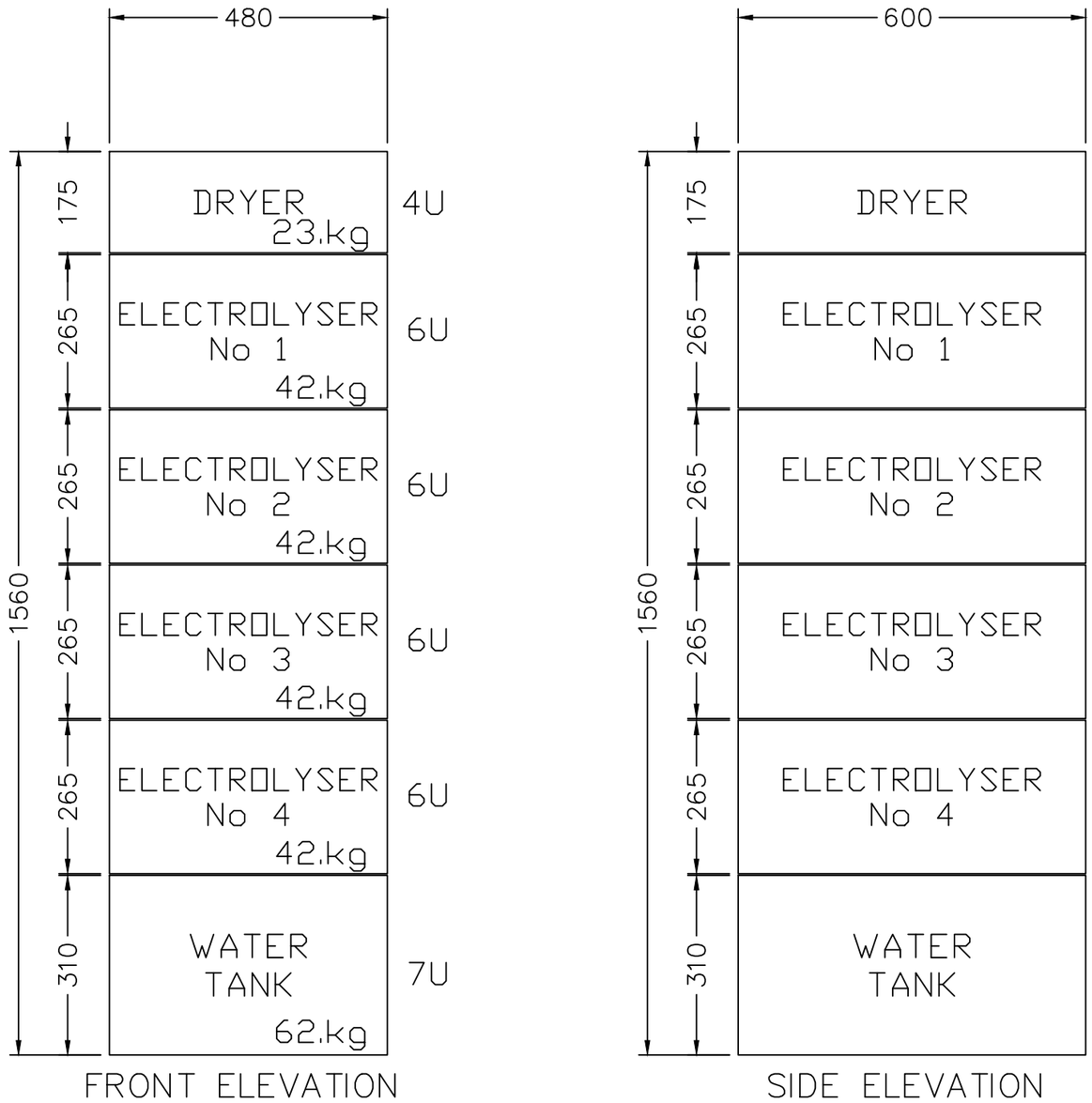

Total Weight 253.kg

Total 35RU

DWG STATUS	AS INSTALLED DATE TBA INITIALS TBA
	WORKSHOP DATE TBA INITIALS TBA

REV.	AMENDMENT DESCRIPTION	DRN	CHKD	DATE
A	PRELIMINARY DRAWINGS	NGP		7.12.23

TITLE: HYDROGEN TRAILER
ELECTROLYSER
CABINET LAYOUT

SHEET 2 OF 9

CLIENT: COVERTEL/GREENREN

R.G.LADD Pty.Ltd.
ELECTRICAL ENGINEERS
& SWITCHBOARD MANUFACTURERS
207 COLCHESTER RD, KILSYTH, VIC 3137
Ph.(03)8720 8100 Fax.(03)9017 8982

DRAWN: NGP	CHECKED:
DATE: 7.12.23	PREPARED BY: NGP
DWG No. RGL50061/003/002	REVISION: A

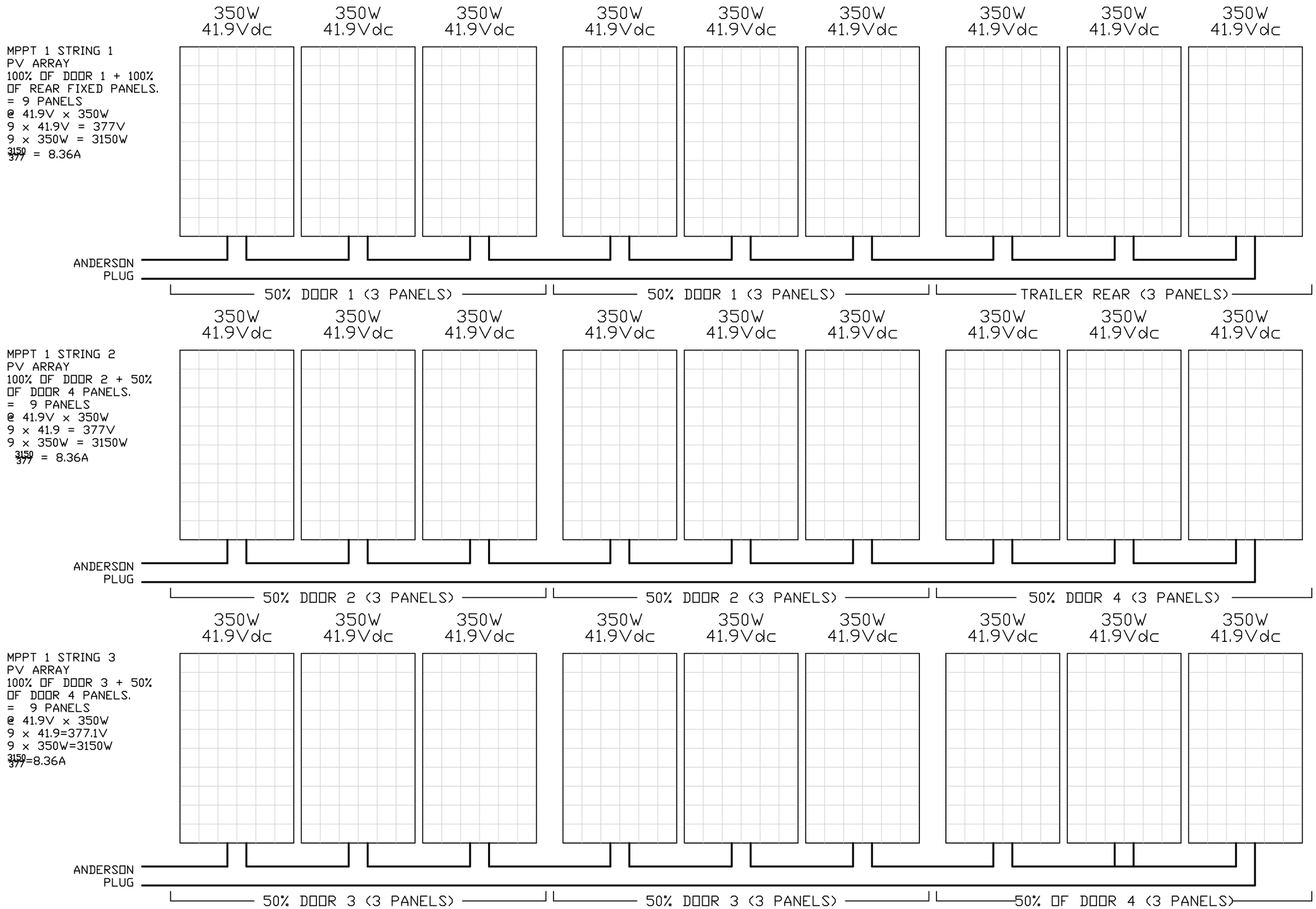

DWG STATUS									
	AS INSTALLED	DATE TBA	INITIALS TBA						
	WORKSHOP	DATE TBA	INITIALS TBA						
				A	PRELIMINARY DRAWINGS	NGP		7.12.23	
				REV.	AMENDMENT DESCRIPTION	DRN	CHKD	DATE	

TITLE: HYDROGEN TRAILER
GENERAL
SLD &
PV ARRAY'S

SHEET 3 OF 9

CLIENT: COVERTEL/GREENREN

R.G.LADD Pty.Ltd.
ELECTRICAL ENGINEERS
& SWITCHBOARD MANUFACTURERS
207 COLCHESTER RD, KILSYTH, VIC 3137
Ph.(03)8720 8100 Fax.(03)9017 8982

DRAWN: NGP	CHECKED:	
DATE: 7.12.23	PREPARED BY: NGP	
DWG No. RGL50061/003/003		REVISION: A

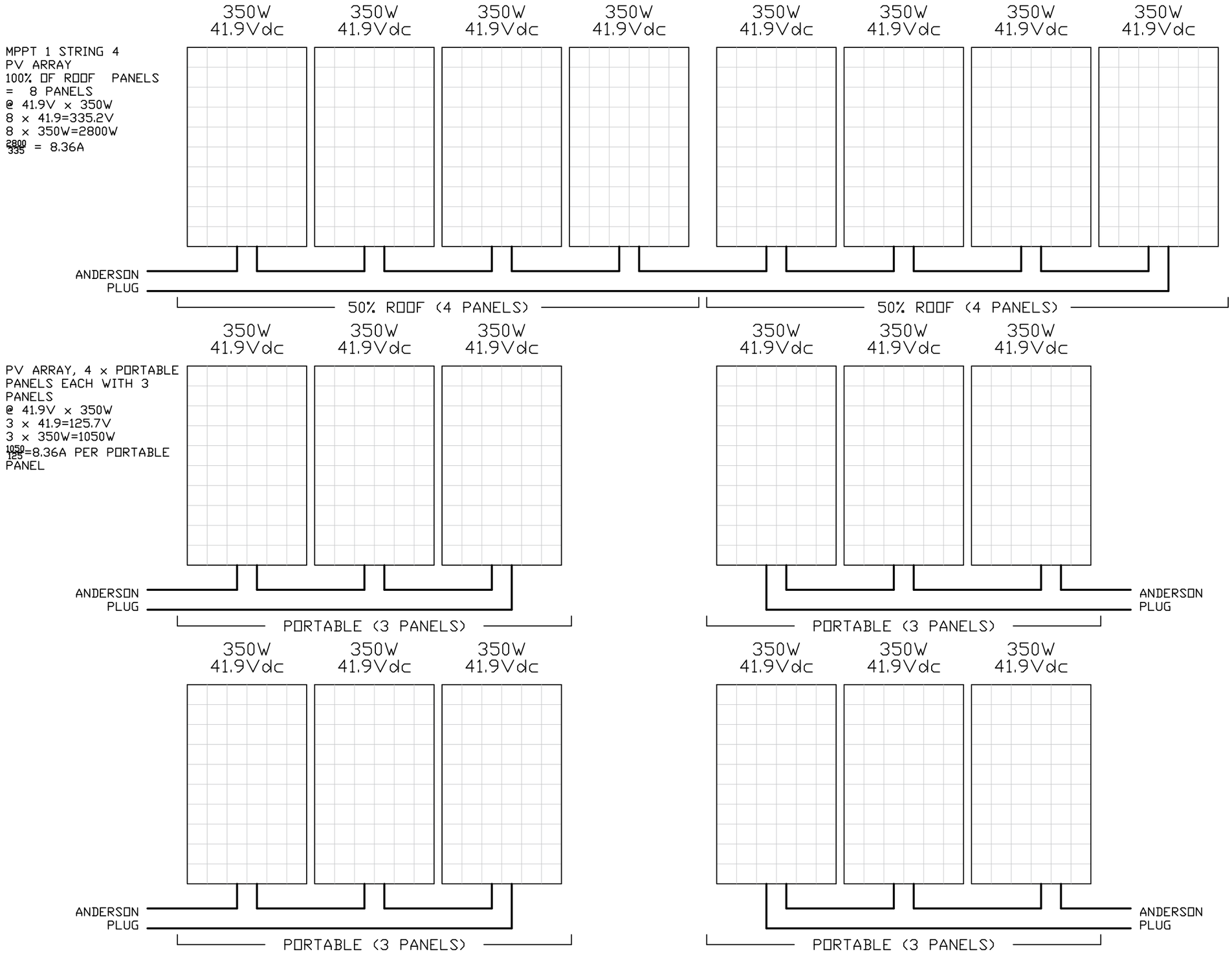

DWG STATUS	AS INSTALLED	DATE TBA	INITIALS TBA
	WORKSHOP	DATE TBA	INITIALS TBA

REV.	AMENDMENT DESCRIPTION	DRN	CHKD	DATE
A	PRELIMINARY DRAWINGS	NGP		7.12.23

TITLE: HYDROGEN TRAILER
GENERAL
SLD &
PV ARRAY'S

SHEET 4 OF 9

CLIENT: COVERTEL/GREENREN

R.G.LADD Pty.Ltd.
ELECTRICAL ENGINEERS
& SWITCHBOARD MANUFACTURERS
207 COLCHESTER RD, KILSYTH, VIC 3137
Ph.(03)8720 8100 Fax.(03)9017 8982

DRAWN: NGP	CHECKED:
DATE: 7.12.23	PREPARED BY: NGP
DWG No. RGL50061/003/004	REVISION: A

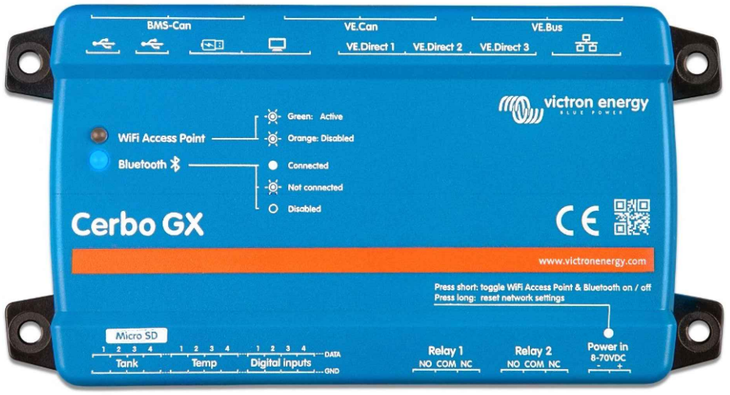

CERBO GX

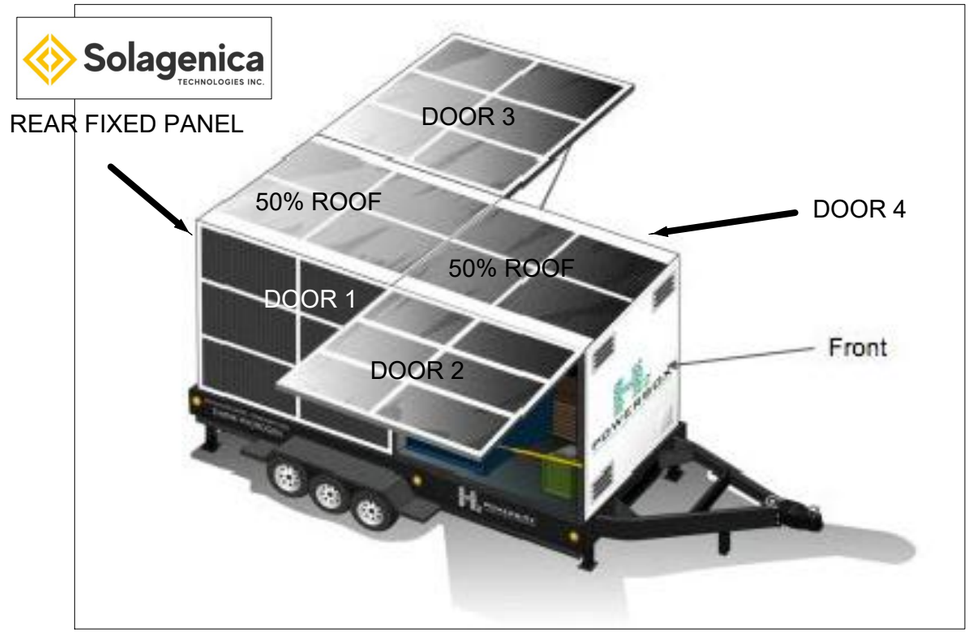

TRAILER DOOR NUMBERS

INVERTER

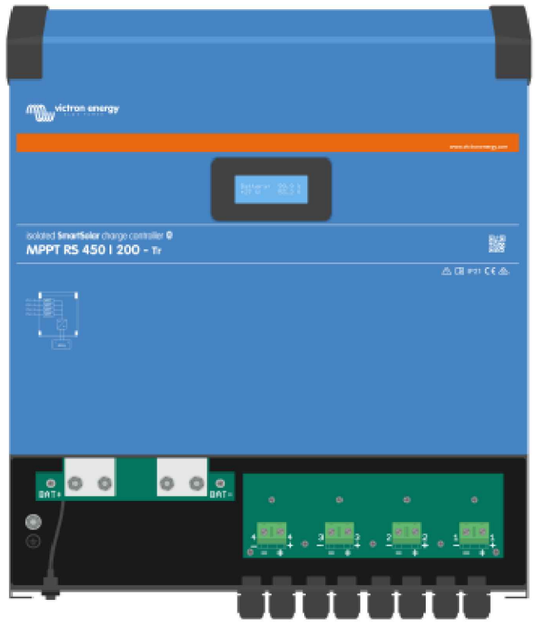

MPPT 1

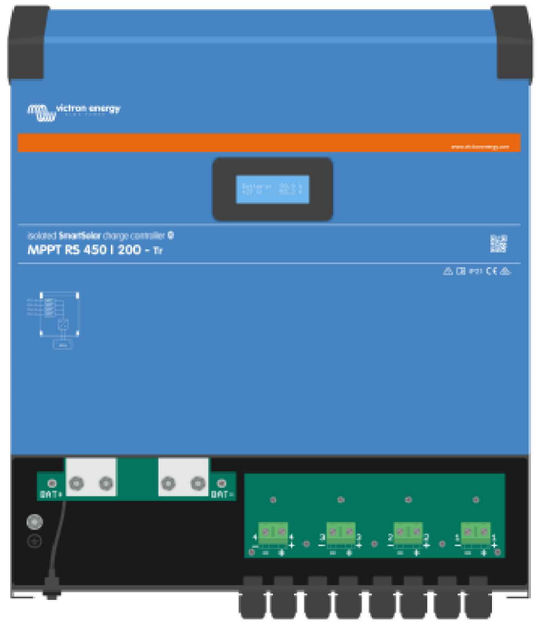

MPPT 2

DWG STATUS	AS INSTALLED	DATE TBA	INITIALS TBA					
	WORKSHOP	DATE TBA	INITIALS TBA					
				A	PRELIMINARY DRAWINGS	NGP		7.12.23
				REV.	AMENDMENT DESCRIPTION	DRN	CHKD	DATE

TITLE: HYDROGEN TRAILER
GENERAL
VICTRON EQUIPMENT
MPPT & GX CONTROLLER

SHEET 5 OF 9

CLIENT: COVERTEL/GREENREN

R.G.LADD Pty.Ltd.
ELECTRICAL ENGINEERS
& SWITCHBOARD MANUFACTURERS
207 COLCHESTER RD, KILSYTH, VIC 3137
Ph.(03)8720 8100 Fax.(03)9017 8982

DRAWN: NGP	CHECKED:
DATE: 7.12.23	PREPARED BY: NGP
DWG No. RGL50061/003/005	REVISION: A

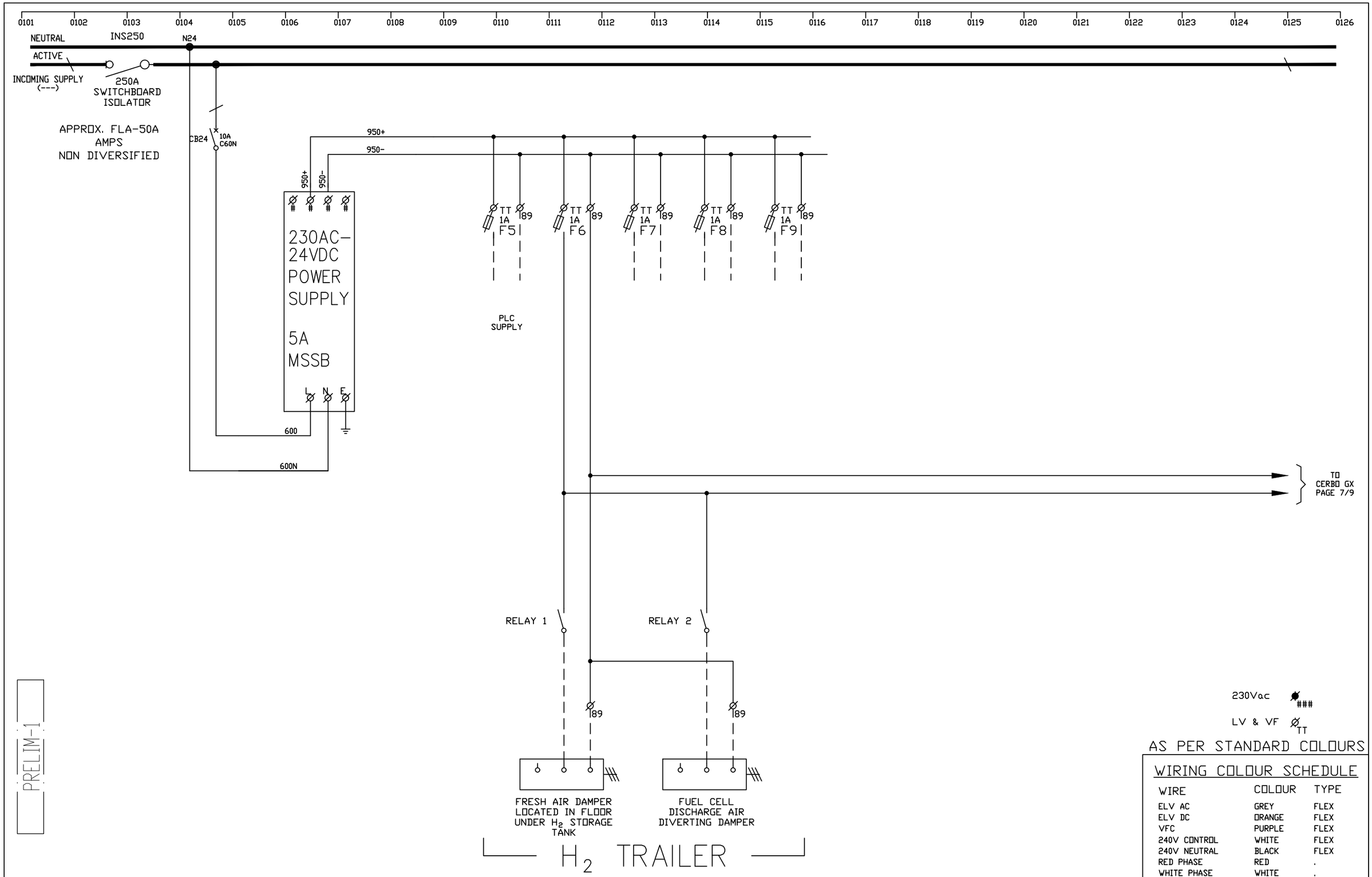

PRELIM-1

WIRING COLOUR SCHEDULE

WIRE	COLOUR	TYPE
ELV AC	GREY	FLEX
ELV DC	ORANGE	FLEX
VFC	PURPLE	FLEX
240V CONTROL	WHITE	FLEX
240V NEUTRAL	BLACK	FLEX
RED PHASE	RED	.
WHITE PHASE	WHITE	.
BLUE PHASE	BLUE	.
EARTH / GND	GREEN/YEL	.

DWG STATUS	AS INSTALLED	DATE TBA	INITIALS TBA
	WORKSHOP	DATE TBA	INITIALS TBA

REV.	AMENDMENT DESCRIPTION	DRN	CHKD	DATE
P	FOR APPROVAL	NGP		29.1.24

TITLE: HYDROGEN TRAILER
24Vdc SUPPLLY AND FANS
AC-DB-1
ELECTRICAL SCHEMATICS

SHEET 6 OF 9

CLIENT:

R.G.LADD Pty.Ltd.
ELECTRICAL ENGINEERS
& SWITCHBOARD MANUFACTURERS
207 COLCHESTER RD, KILSYTH, VIC 3137
Ph.(03)8720 8100 Fax.(03)9017 8982

DRAWN: NGP	CHECKED:
DATE: 14.4.21	PREPARED BY: NGP
DWG No. RGL50061/003/006	REVISION: A

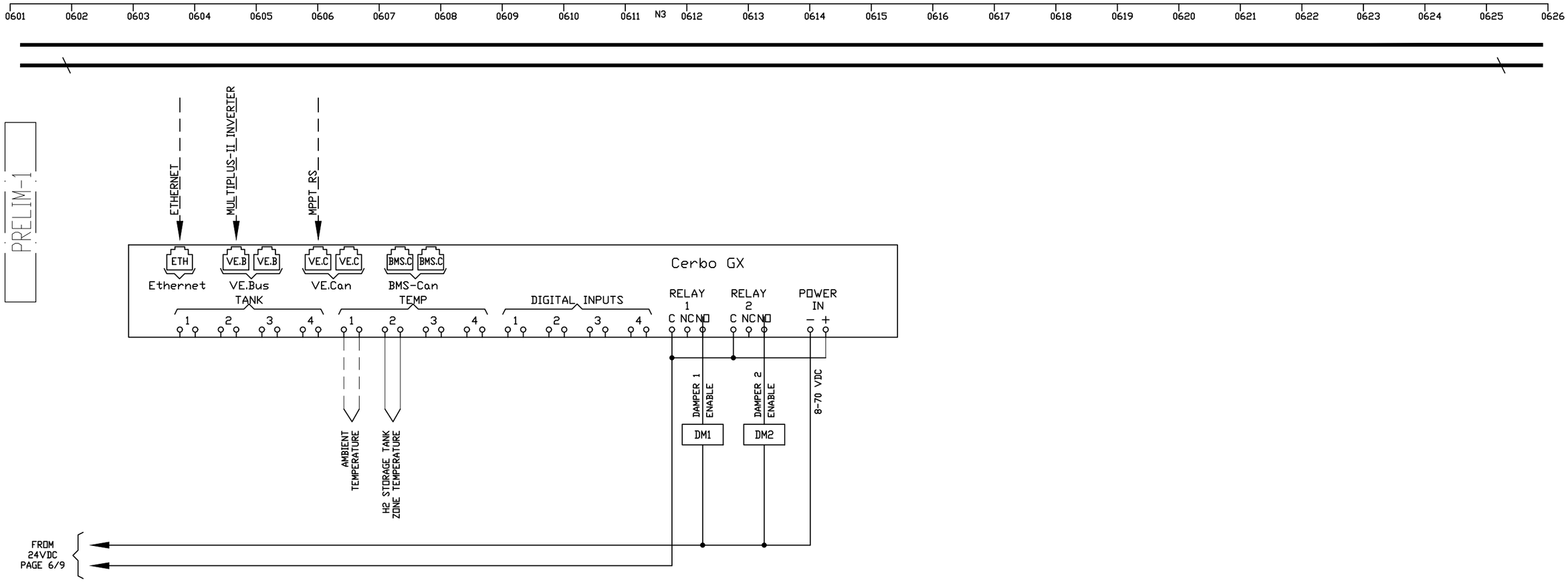

DWG STATUS	AS INSTALLED DATE TBA INITIALS TBA								
	WORKSHOP DATE TBA INITIALS TBA								
				A	FOR APPROVAL	NGP		29.1.24	
				REV.	AMENDMENT DESCRIPTION	DRN	CHKD	DATE	

TITLE: HYDROGEN TRAILER
ELECTROLISER
POWER SUPPLIES
ELECTRICAL SCHEMATICS

SHEET 7 OF 9

CLIENT:

R.G.LADD Pty.Ltd.
ELECTRICAL ENGINEERS
& SWITCHBOARD MANUFACTURERS
207 COLCHESTER RD, KILSYTH, VIC 3137
Ph.(03)8720 8100 Fax.(03)9017 8982

DRAWN: NGP	CHECKED:
DATE: 28.1.24	PREPARED BY: NGP
DWG No. RGL50061/003/007	REVISION: A

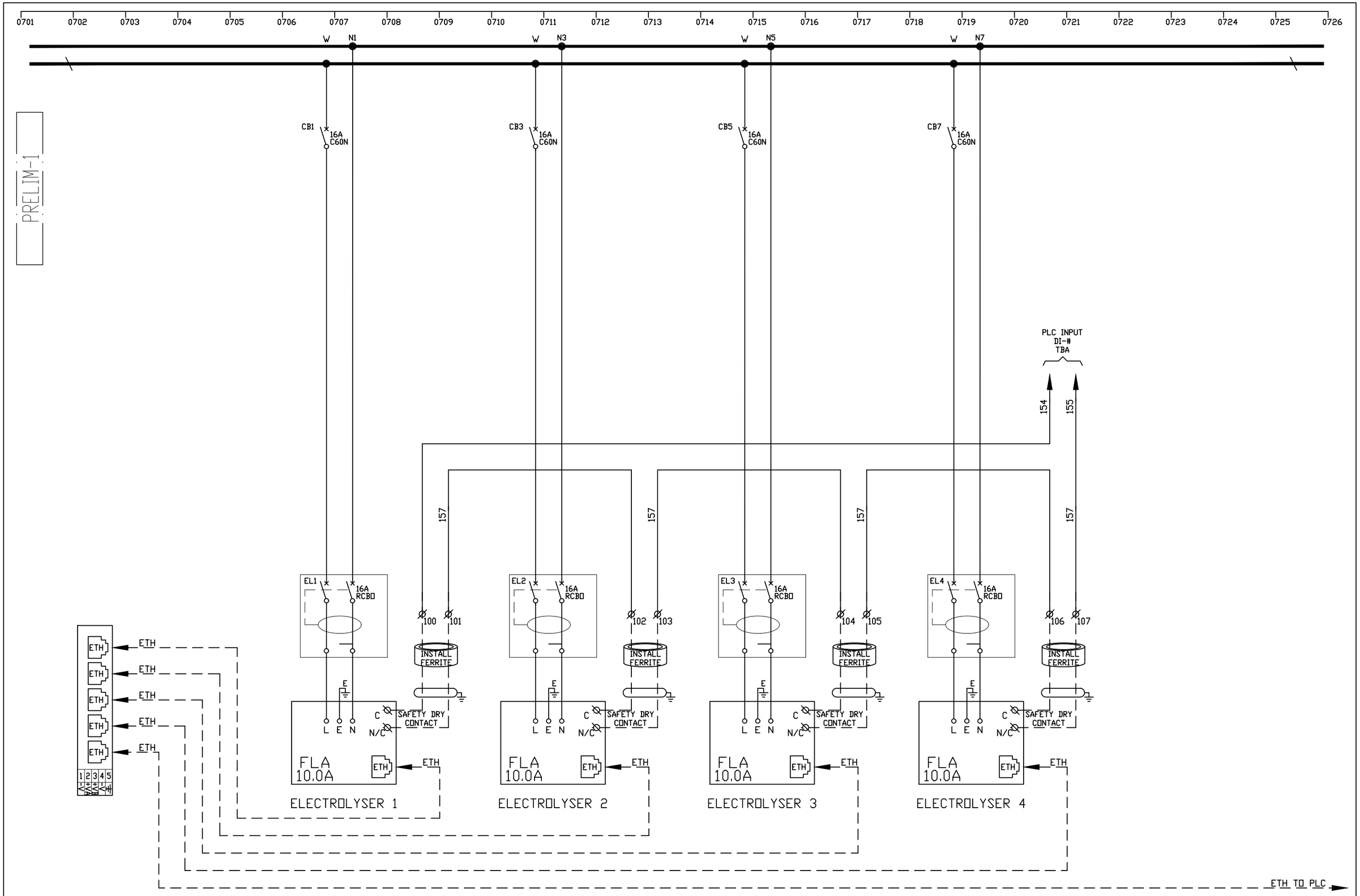

DWG STATUS	AS INSTALLED DATE TBA	INITIALS TBA					TITLE: HYDROGEN TRAILER ELECTRILISER AUXILIARY EQUIPMENT ELECTRICAL SCHEMATICS	R.G.LADD Pty.Ltd. ELECTRICAL ENGINEERS & SWITCHBOARD MANUFACTURERS 207 COLCHESTER RD, KILSYTH, VIC 3137 Ph.(03)8720 8100 Fax.(03)9017 8982	DRAWN: NGP / CHECKED:
	WORKSHOP DATE TBA	INITIALS TBA							DATE: 28.1.24 / PREPARED BY: NGP
			A	FOR APPROVAL	NGP	29.1.24	SHEET 8 OF 9		DWG No. RGL50061/003/008 / REVISION: A
			REV.	AMENDMENT DESCRIPTION	DRN	CHKD / DATE	CLIENT:		

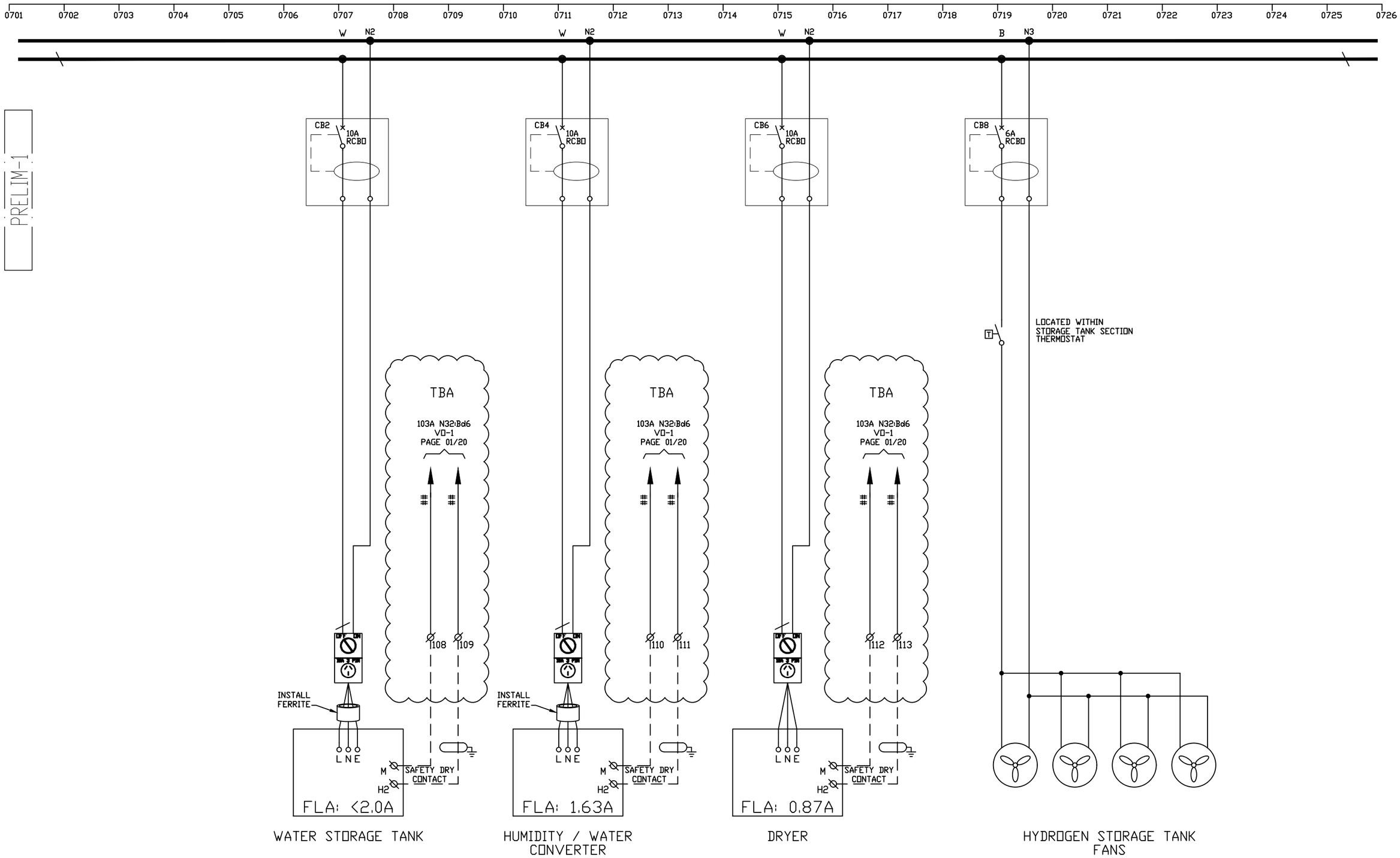

DWG STATUS										
	AS INSTALLED	DATE TBA	INITIALS TBA							
	WORKSHOP	DATE TBA	INITIALS TBA							
				A	FOR APPROVAL	NGP		29.1.24		
				REV.	AMENDMENT DESCRIPTION	DRN	CHKD	DATE		

TITLE: HYDROGEN TRAILER
ELECTRILISER
AUXILIARY EQUIPMENT
ELECTRICAL SCHEMATICS

SHEET 9 OF 9

CLIENT:

R.G.LADD Pty.Ltd.
ELECTRICAL ENGINEERS
& SWITCHBOARD MANUFACTURERS
207 COLCHESTER RD, KILSYTH, VIC 3137
Ph.(03)8720 8100 Fax.(03)9017 8982

DRAWN: NGP	CHECKED:	
DATE: 28.1.24	PREPARED BY: NGP	
DWG No. RGL50061/003/009		REVISION: A