Make sure R@USB_DMDP are close to RP2350

https://how2electronics.com/how-to-use-i2c-pins-in-raspberry-pi-pico-i2c-scanner/
https://datasheets.raspberrypi.com/rp2350/hardware-design-with-rp2350.pdf

MCU

1 A Regul 3.3V

SMBC	SCL	Horloge (générée par le maître)
SMBD	SDA	Données (bidirectionnel)

Sheet: /
File: BMS.kicad_sch

Title:

Size: A3 | Date: | **Rev:**
KiCad E.D.A. 9.0.6 | Id: 1/19

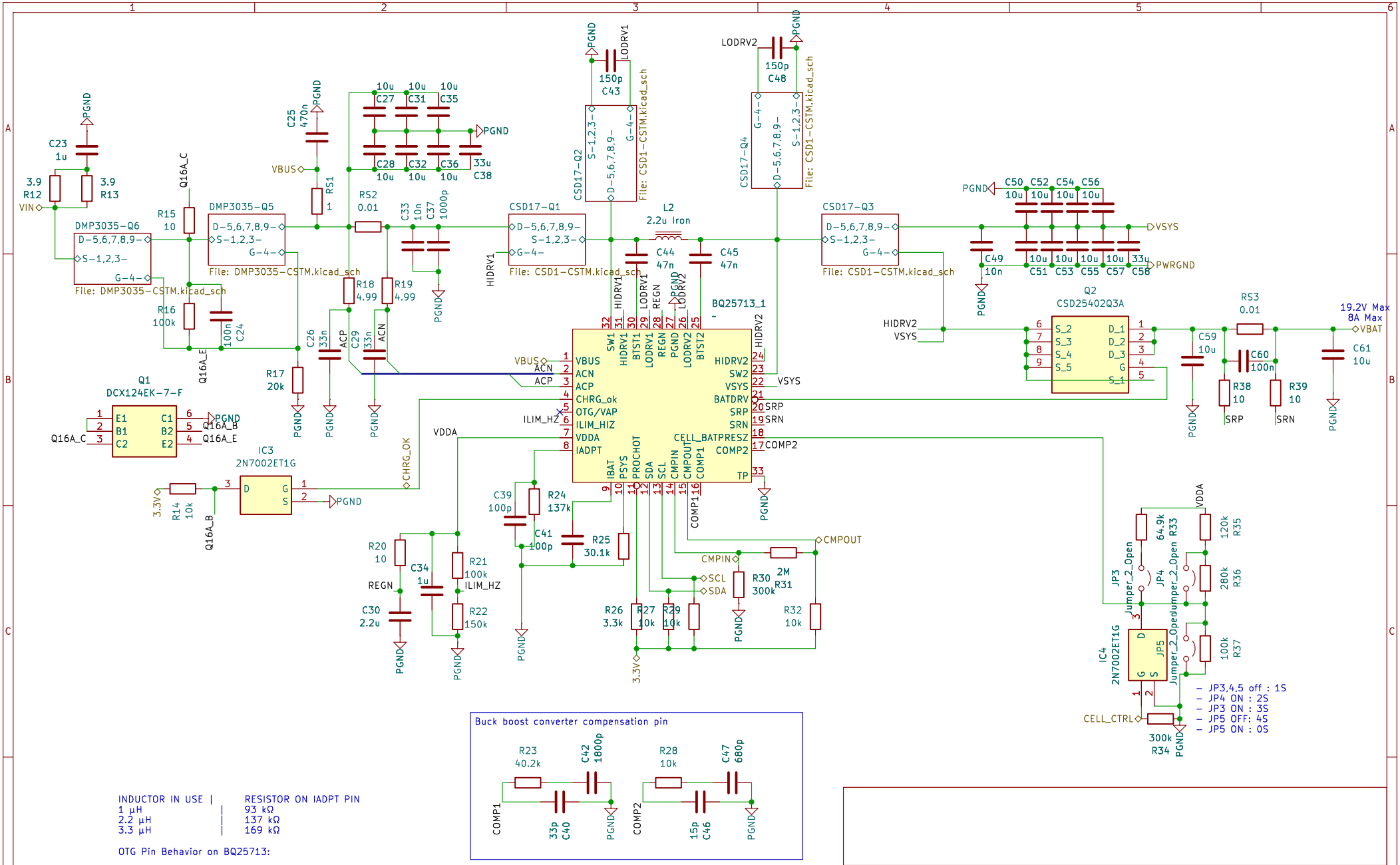

INDUCTOR IN USE	RESISTOR ON IADPT PIN
1 µH	93 kΩ
2.2 µH	137 kΩ
3.3 µH	169 kΩ

OTG Pin Behavior on BQ25713:

Floating (default): OTG mode is disabled (normal charging operation).
Pulled low (GND): OTG mode is disabled (same as floating).
Pulled high (to VIN or a GPIO): Enables OTG (boost) mode (if supported by your configuration).

Sheet: /Chargeur/
File: Chargeur.kicad_sch

Title:

Size: A4 | Date: | **Rev:**

KiCad E.D.A. 9.0.6 | Id: 2/19

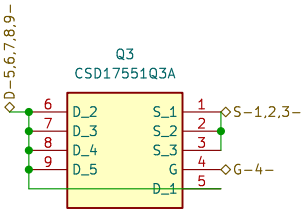

Sheet: /Chargeur/CSD17-Q1/		
File: CSD1-CSTM.kicad_sch		
Title:		
Size: A4	Date:	**Rev:**
KiCad E.D.A. 9.0.6		Id: 3/19

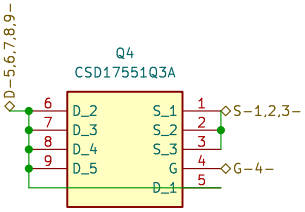

Sheet: /Chargeur/CSD17-Q2/
File: CSD1-CSTM.kicad_sch

Title:

Size: A4	Date:	**Rev:**
KiCad E.D.A. 9.0.6		Id: 4/19

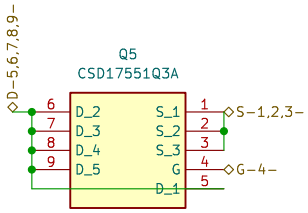

Sheet: /Chargeur/CSD17-Q3/
File: CSD1-CSTM.kicad_sch

Title:

Size: A4	Date:	**Rev:**
KiCad E.D.A. 9.0.6		Id: 5/19

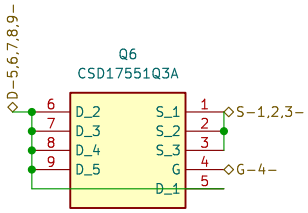

Sheet: /Chargeur/CSD17-Q4/
File: CSD1-CSTM.kicad_sch

Title:

Size: A4	Date:	**Rev:**
KiCad E.D.A. 9.0.6		Id: 6/19

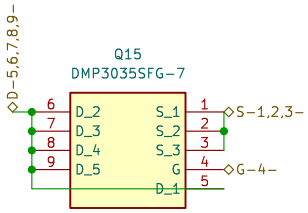

Sheet: /Chargeur/DMP3035-Q5/
File: DMP3035-CSTM.kicad_sch

Title:

Size: A4	Date:	**Rev:**
KiCad E.D.A. 9.0.6		Id: 10/19

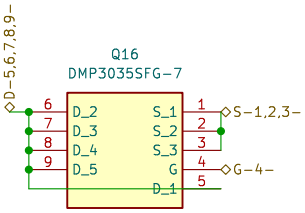

Sheet: /Chargeur/DMP3035-Q6/
File: DMP3035-CSTM.kicad_sch

Title:

Size: A4	Date:	**Rev:**
KiCad E.D.A. 9.0.6		Id: 11/19

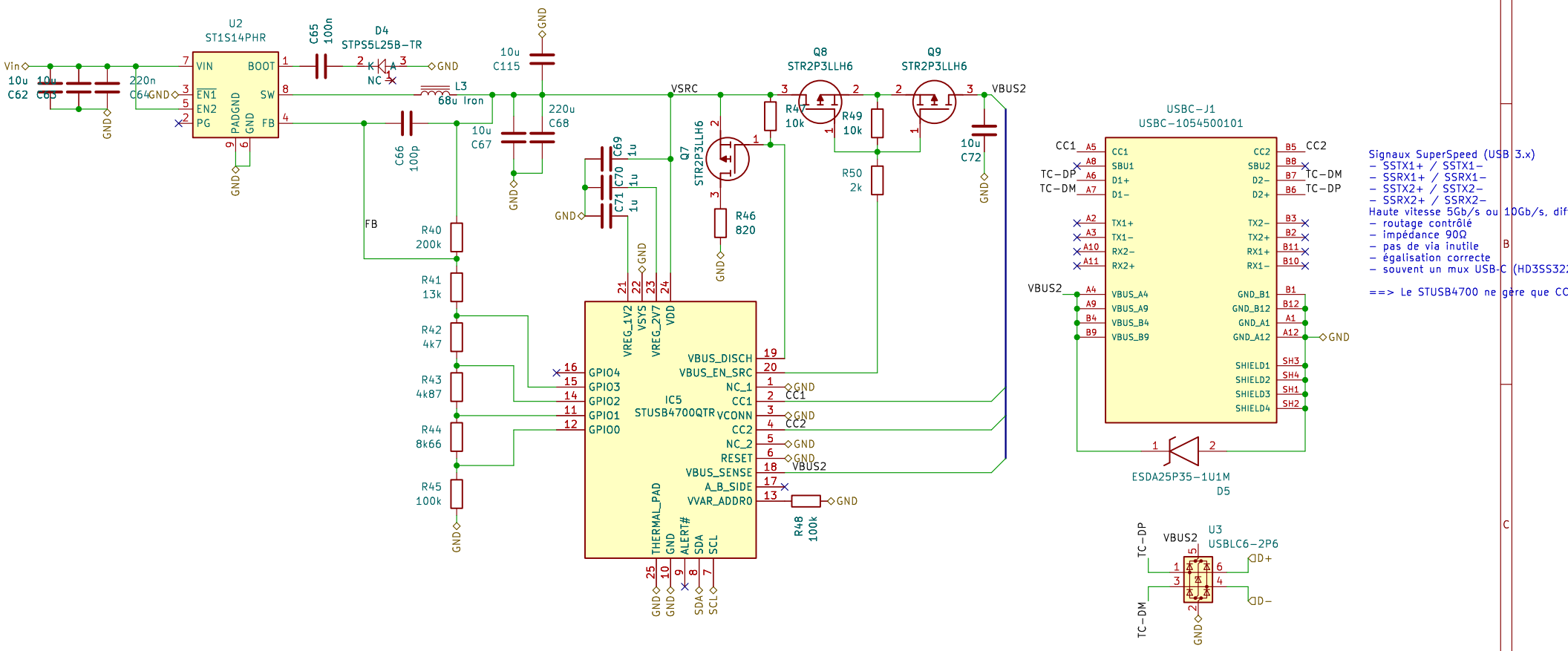

https://www.mouser.fr/ProductDetail/STMicroelectronics/STUSB4700QTR?qs=z7LT7PaeiGHOUo05EuM2ew%3D%3D&srsltid=AfmBOoqeQpeiA-KYd0LzDVCJVYU1X0lOVA5p7QPkekSc7ScKDJSK4vdi
https://www.mouser.fr/ProductDetail/STMicroelectronics/STM32F072CBT6?qs=xf9JV0PLFEfBqXx8wKtR8A%3D%3D&mgh=1&vip=1&utm_id=18188302969&utm_source=google&utm_medium=cpc&utm_marketing_tactic=emeacorp&gad_source=1&gad_campaignid=1819309125

Sheet: /USB-C-PD-Master/
File: USB-C.kicad_sch

Title:

Size: A4	Date:	**Rev:**
KiCad E.D.A. 9.0.6		Id: 7/19

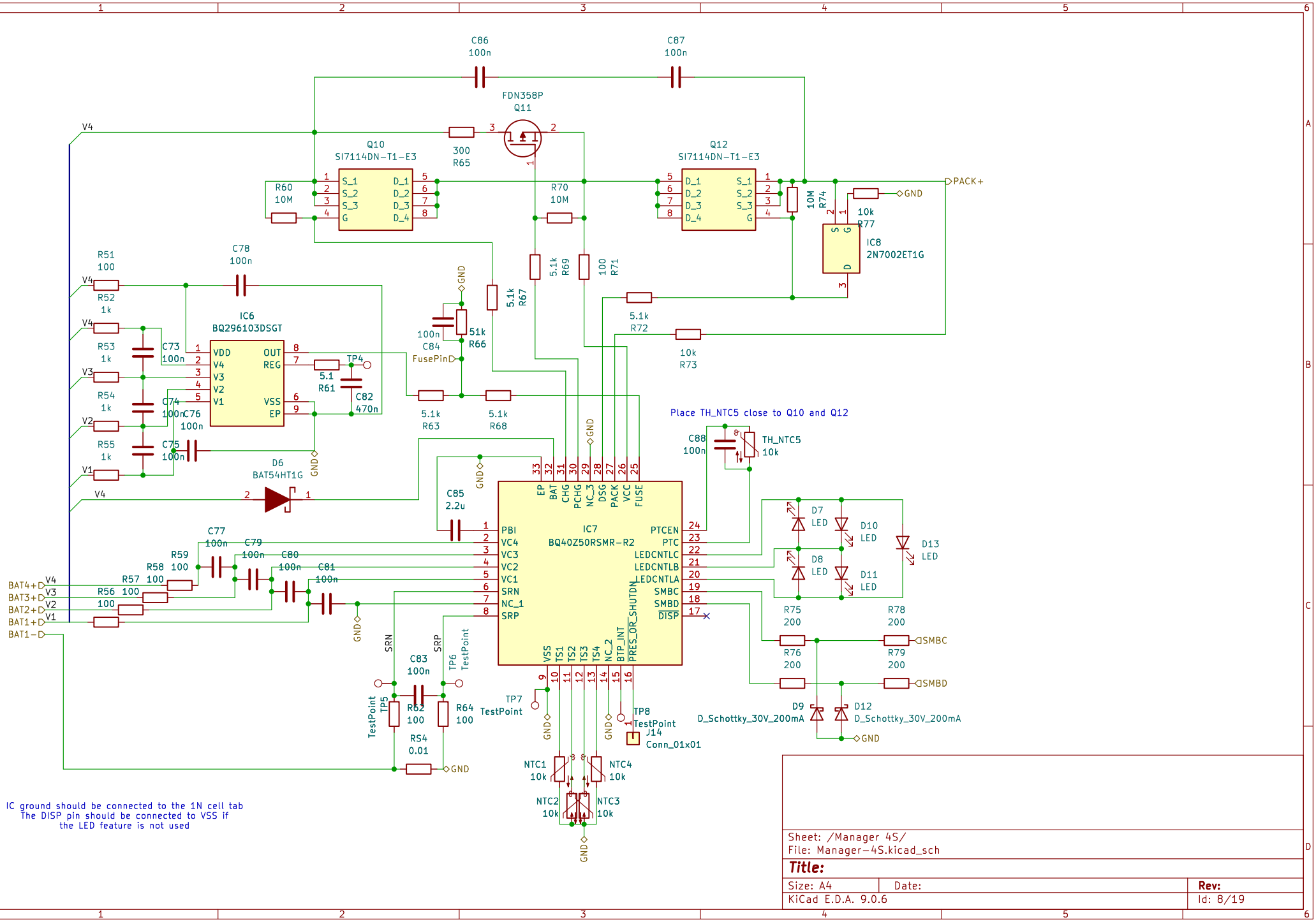
C86
100n
C87
100n
FDN358P
Q11
Q10
SI7114DN-T1-E3
Q12
SI7114DN-T1-E3
300
R65
R60
10M
R70
10M
10M
R74
10k
R77
IC8
2N7002ET1G
PACK+
GND
R51
100
C78
100n
R52
1k
R53
1k
R54
1k
R55
1k
IC6
BQ296103DSGT
C73
100n
C74
100n
C76
100n
C75
100n
TP4
5.1
R61
C82
470n
D6
BAT54HT1G
5.1k
R69
100
R71
5.1k
R67
5.1k
R72
10k
R73
100n
C84
FusePin
51k
R66
5.1k
R63
5.1k
R68
Place TH_NTC5 close to Q10 and Q12
C88
100n
TH_NTC5
10k
C85
2.2u
IC7
BQ40Z50RSMR-R2
C77
100n
C79
100n
C80
100n
C81
100n
R59
100
R58
100
R57
100
R56
100
100
BAT4+
BAT3+
BAT2+
BAT1+
BAT1-
SRN
SRP
C83
100n
R62
100
R64
100
RS4
0.01
TP5
TP6
TestPoint
TP7
TestPoint
TP8
TestPoint
J14
Conn_01x01
D7
LED
D8
LED
D10
LED
D11
LED
D13
LED
R75
200
R76
200
R78
200
R79
200
SMBC
SMBD
D9
D_Schottky_30V_200mA
D12
D_Schottky_30V_200mA
NTC1
10k
NTC2
10k
NTC3
10k
NTC4
10k
IC ground should be connected to the 1N cell tab
The DISP pin should be connected to VSS if
the LED feature is not used
Sheet: /Manager 4S/
File: Manager-4S.kicad_sch
Title:
Size: A4
Date:
Rev:
KiCad E.D.A. 9.0.6
Id: 8/19

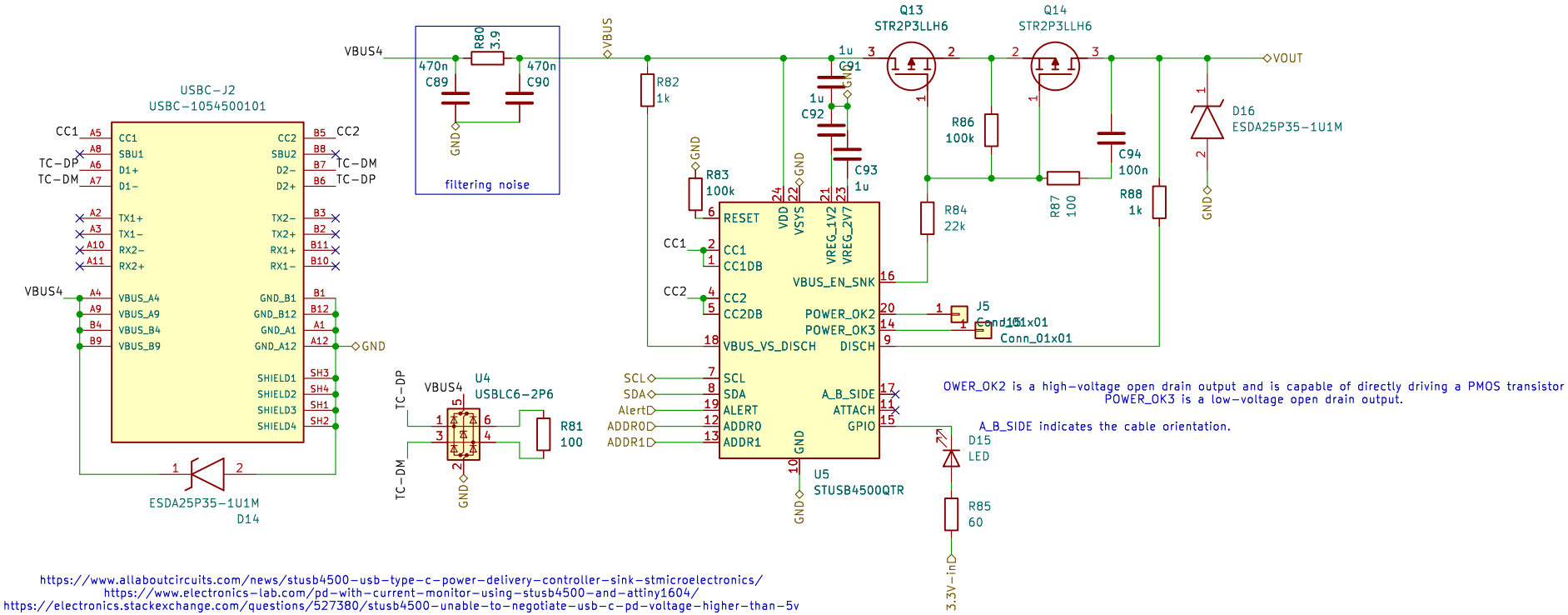

OWER_OK2 is a high-voltage open drain output and is capable of directly driving a PMOS transistor
POWER_OK3 is a low-voltage open drain output.

A_B_SIDE indicates the cable orientation.

https://www.allaboutcircuits.com/news/stusb4500-usb-type-c-power-delivery-controller-sink-stmicroelectronics/
https://www.electronics-lab.com/pd-with-current-monitor-using-stusb4500-and-attiny1604/
https://electronics.stackexchange.com/questions/527380/stusb4500-unable-to-negotiate-usb-c-pd-voltage-higher-than-5v

Sheet: /USB-C SINK/
File: USB-C_SINK.kicad_sch

Title:

Size: A4	Date:	**Rev:**
KiCad E.D.A. 9.0.6		Id: 9/19

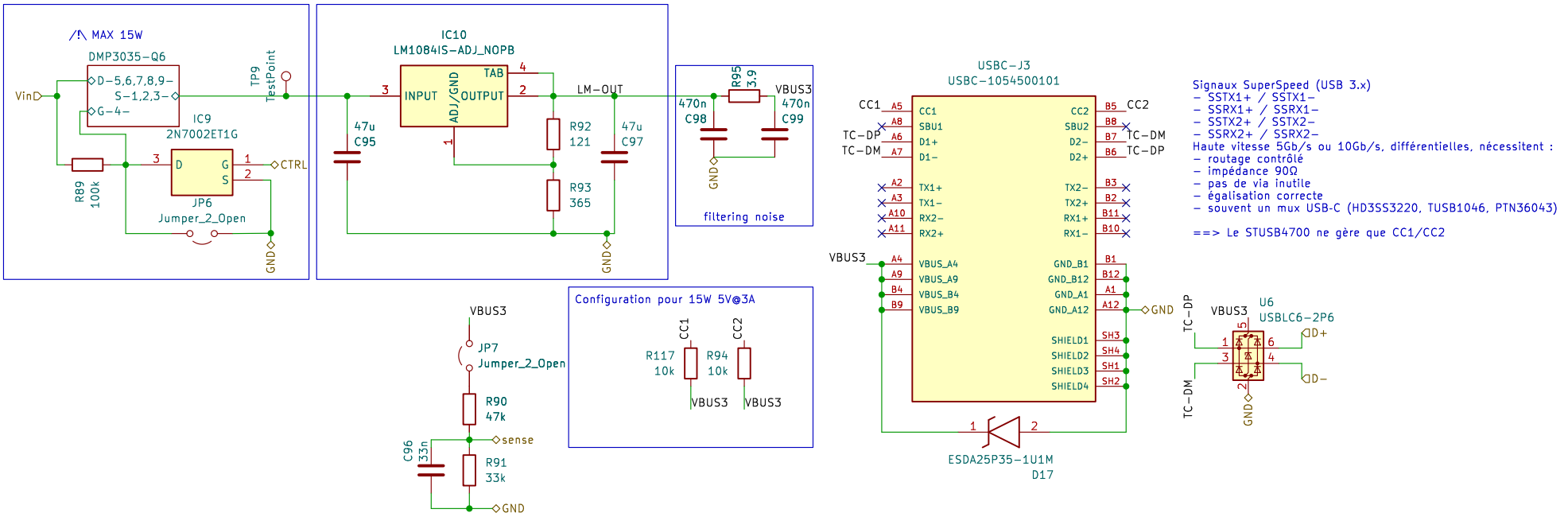
/!\ MAX 15W
DMP3035-Q6
D-5,6,7,8,9-
S-1,2,3-
G-4-
VinD
TP9
TestPoint
IC9
2N7002ET1G
D
G
S
CTRL
R89
100k
JP6
Jumper_2_Open
GND
IC10
LM1084IS-ADJ_NOPB
INPUT
ADJ/GND
OUTPUT
TAB
LM-OUT
47u
C95
R92
121
R93
365
47u
C97
R95
3.9
470n
C98
470n
C99
VBUS3
filtering noise
USBC-J3
USBC-1054500101
CC1
CC2
TC-DP
TC-DM
VBUS_A4
VBUS_A9
VBUS_B4
VBUS_B9
GND_B1
GND_B12
GND_A1
GND_A12
GND
SHIELD1
SHIELD2
SHIELD3
SHIELD4
ESDA25P35-1U1M
D17
Signaux SuperSpeed (USB 3.x)
- SSTX1+ / SSTX1-
- SSRX1+ / SSRX1-
- SSTX2+ / SSTX2-
- SSRX2+ / SSRX2-
Haute vitesse 5Gb/s ou 10Gb/s, différentielles, nécessitent :
- routage contrôlé
- impédance 90Ω
- pas de via inutile
- égalisation correcte
- souvent un mux USB-C (HD3SS3220, TUSB1046, PTN36043)
==> Le STUSB4700 ne gère que CC1/CC2
U6
USBLC6-2P6
D+
D-
VBUS3
JP7
Jumper_2_Open
R90
47k
sense
C96
33n
R91
33k
GND
Configuration pour 15W 5V@3A
R117
10k
R94
10k
VBUS3
https://electronics.stackexchange.com/questions/327791/using-usb-c-as-a-power-source
Pull-up to 5V port capability
56 kOhm => 500 or 900 mA
22 kOhm => 1.5 A
10 kOhm => 3.0 A
https://www.mouser.fr/ProductDetail/STMicroelectronics/STUSB4700QTR?qs=z7LT7PaeiGHOUo05EuM2ew%3D%3D&srsltid=AfmBOoqeQpeiA-KYd0LzDVCJVYU1X0lOVA5p7QPkekSc7ScKDJSK4vdi
https://www.mouser.fr/ProductDetail/STMicroelectronics/STM32F072CBT6?qs=xf9JV0PLFEfBqXx8wKtR8A%3D%3D&mgh=1&vip=1&utm_id=18188302969&utm_source=google&utm_medium=cpc&utm_marketing_tactic=emeacorp&gad_source=1&gad_campaignid=1819309125
Sheet: /USB-C-5V@3A/
File: USB-C-5V@3A.kicad_sch
Title:
Size: A4
Date:
Rev:
KiCad E.D.A. 9.0.6
Id: 12/19

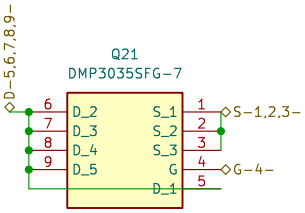

Sheet: /USB-C-5V@3A/DMP3035-Q6/
File: DMP3035-CSTM.kicad_sch

Title:

Size: A4	Date:	**Rev:**
KiCad E.D.A. 9.0.6		Id: 16/19

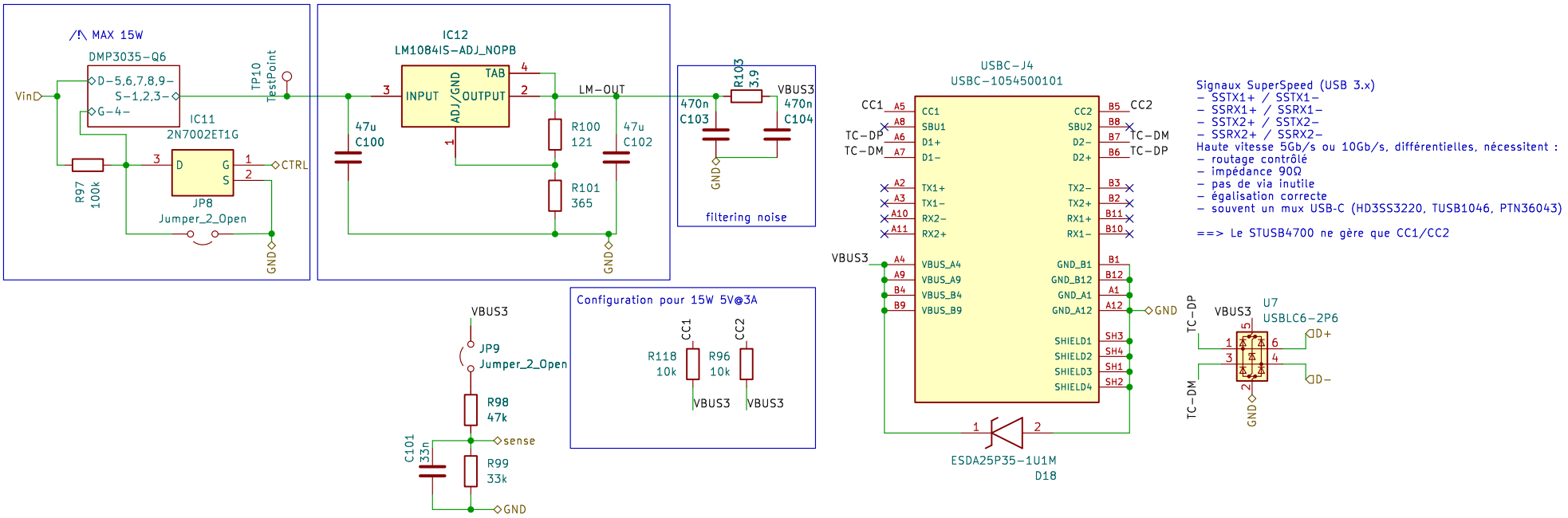

https://www.mouser.fr/ProductDetail/STMicroelectronics/STUSB4700QTR?qs=z7LT7PaeiGHOUo05EuM2ew%3D%3D&srsltid=AfmBOoqeQpeiA-KYd0LzDVCJVYU1X0lOVA5p7QPkekSc7ScKDJSK4vdi
https://www.mouser.fr/ProductDetail/STMicroelectronics/STM32F072CBT6?qs=xf9JV0PLFEfBqXx8wKtR8A%3D%3D&mgh=1&vip=1&utm_id=18188302969&utm_source=google&utm_medium=cpc&utm_marketing_tactic=emeacorp&gad_source=1&gad_campaignid=1819309125

Sheet: /USB-C-5V@3A1/ File: USB-C-5V@3A.kicad_sch		
Title:		
Size: A4	Date:	**Rev:**
KiCad E.D.A. 9.0.6		Id: 13/19

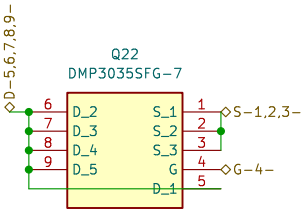

Sheet: /USB-C-5V@3A1/DMP3035-Q6/
File: DMP3035-CSTM.kicad_sch

Title:

Size: A4	Date:	**Rev:**
KiCad E.D.A. 9.0.6		Id: 19/19

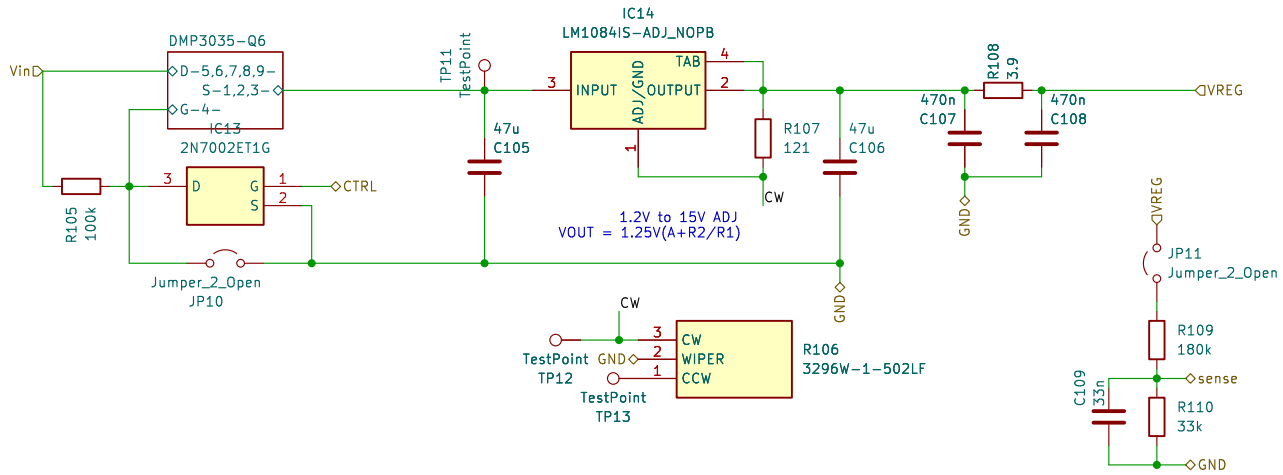

https://www.mouser.fr/ProductDetail/STMicroelectronics/STUSB4700QTR?qs=z7LT7PaeiGHOUo05EuM2ew%3D%3D&srsltid=AfmBOoqeQpeiA-KYd0LzDVCJVYU1X0lOVA5p7QPkekSc7ScKDJSK4vdi
https://www.mouser.fr/ProductDetail/STMicroelectronics/STM32F072CBT6?qs=xf9JV0PLFEfBqXx8wKtR8A%3D%3D&mgh=1&vip=1&utm_id=18188302969&utm_source=google&utm_medium=cpc&utm_marketing_tactic=emeacorp&gad_source=1&gad_campaignid=1819309125

Sheet: /Out-Ajst/ File: LM-Ajuster.kicad_sch		
Title:		
Size: A4	Date:	**Rev:**
KiCad E.D.A. 9.0.6		Id: 14/19

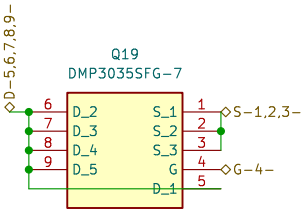

Sheet: /Out-Ajst/DMP3035-Q6/
File: DMP3035-CSTM.kicad_sch

Title:

Size: A4	Date:	**Rev:**
KiCad E.D.A. 9.0.6		Id: 17/19

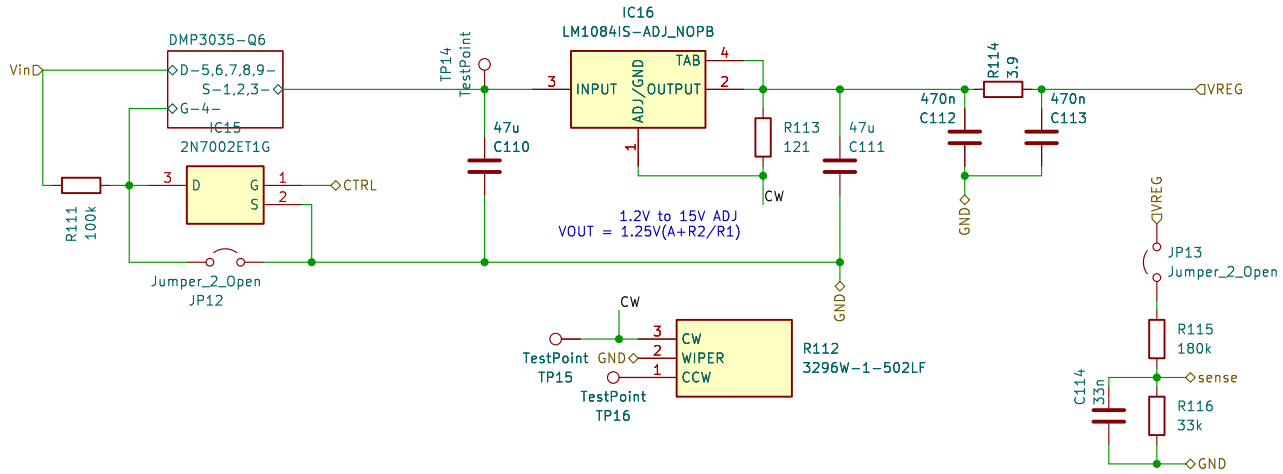

https://www.mouser.fr/ProductDetail/STMicroelectronics/STUSB4700QTR?qs=z7LT7PaeiGHOUo05EuM2ew%3D%3D&srsltid=AfmBOoqeQpeiA-KYd0LzDVCJVYU1X0lOVA5p7QPkekSc7ScKDJSK4vdi
https://www.mouser.fr/ProductDetail/STMicroelectronics/STM32F072CBT6?qs=xf9JV0PLFEfBqXx8wKtR8A%3D%3D&mgh=1&vip=1&utm_id=18188302969&utm_source=google&utm_medium=cpc&utm_marketing_tactic=emeacorp&gad_source=1&gad_campaignid=1819309125

Sheet: /Out-Ajst1/		
File: LM-Ajuster.kicad_sch		
Title:		
Size: A4	Date:	**Rev:**
KiCad E.D.A. 9.0.6		Id: 15/19

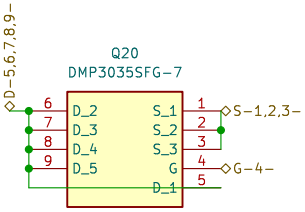

Sheet: /Out-Ajst1/DMP3035-Q6/
File: DMP3035-CSTM.kicad_sch

Title:

Size: A4	Date:	**Rev:**
KiCad E.D.A. 9.0.6		Id: 18/19