The architecture of the Clean phase.

VortiFlow: Engineered Lateral-Flow Irrigation Irrigation.

Designed with a unique helical channel concept and closed-end tip to support continuous fluid movement, debris transport, and strict apical control.

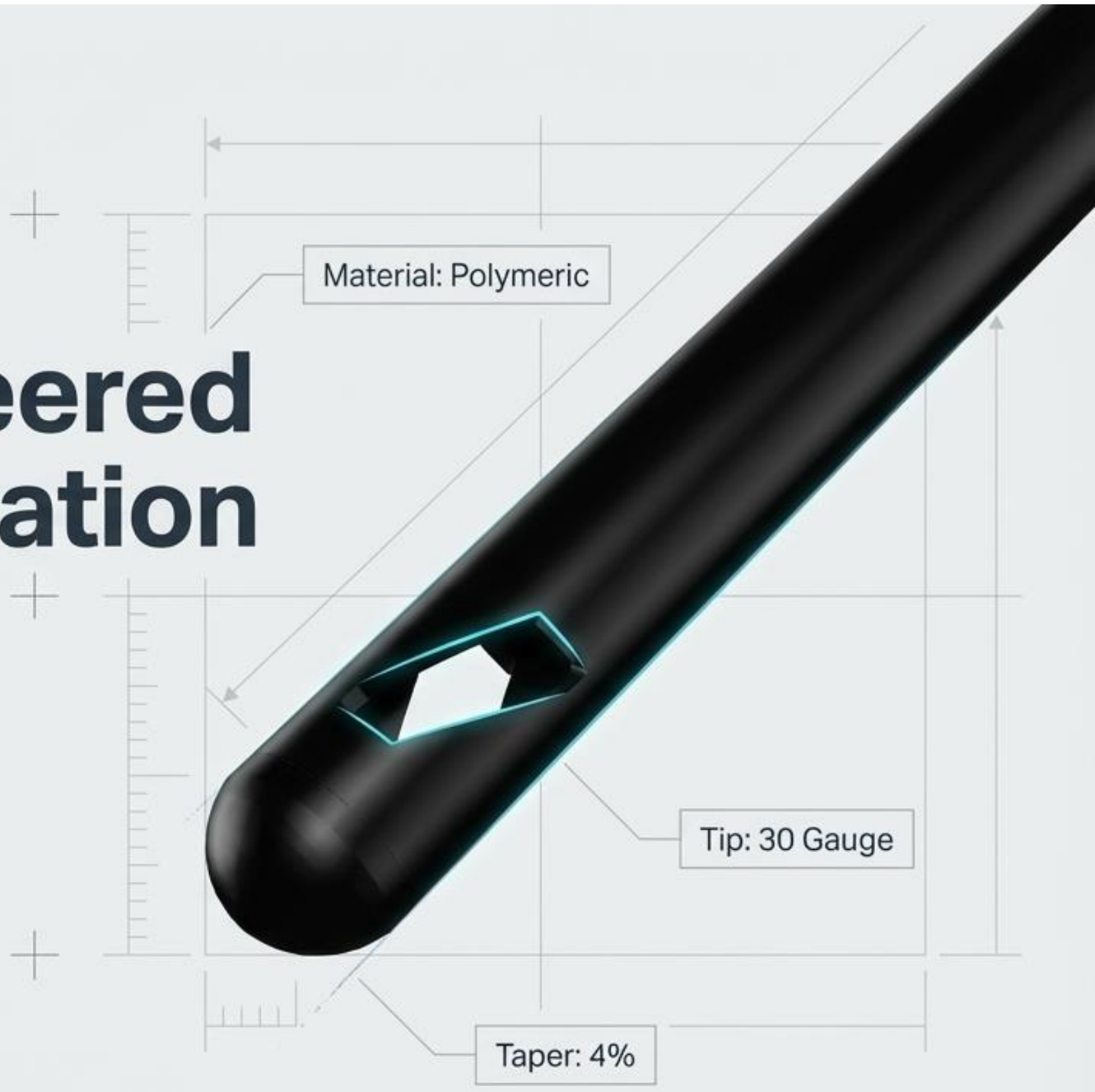

NotebookLM

Mechanical shaping provides the pathway; engineered irrigation provides the biological resolution. VortiFlow seamlessly integrates as the definitive instrument for the Clean phase.

NotebookLM

The Clinical Mandate: The Limits of Instrumentation

30–40%

The maximum root canal wall surface area encompassed by mechanical instrumentation.

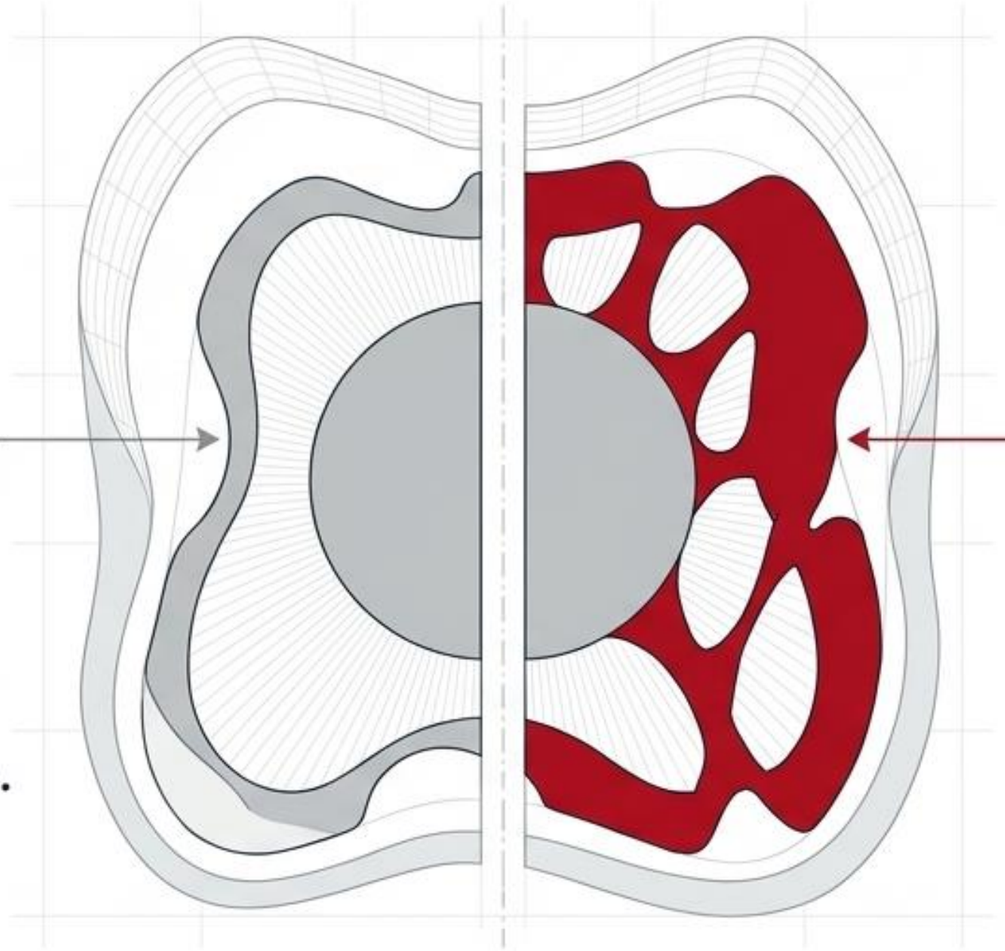

60–70%

The critical anatomy (isthmuses, apical deltas) **reliant entirely on fluid-driven chemical debridement.**

Mechanical shaping leaves up to 70% of the root canal wall untouched. Eradication of biofilm and debris relies fundamentally on precise fluid dynamics and active chemical exchange.

NotebookLM

The Physics of Chemical Debridement

Replenishment

Active chemistry (NaOCl / EDTA) is rapidly depleted by pulp tissue and dentin. It demands continuous, high-volume fluid exchange.

Shear Stress

Dislodging tenacious biofilm requires physical fluid movement and lateral pressure against the canal walls, not just passive pooling.

Apical Safety

Deep apical delivery must be achieved without the risk of direct apical extrusion of caustic irrigants into periapical tissues.

Takeaway: Effective delivery requires an instrument that balances high flow rates and active fluid movement with strict apical limitation.

NotebookLM

Introducing VortiFlow: The Blueprint

Luer-Lock Hub

Ensures secure, leak-free connection to standard syringes.

Calibrated Shank

Features integrated pre-marked depth indicators at 18mm, 19mm, 20mm, and 22mm for instant visual depth control without pre-bending.

Polymeric Body

Highly flexible plastic construction prevents binding and accommodates severe canal curvatures.

Engineered Profile

27mm total working length, 4% continuous taper, transitioning to a fine 30-gauge tip for deep apical penetration.

NotebookLM

Engineered Anatomy: Form Meets Function

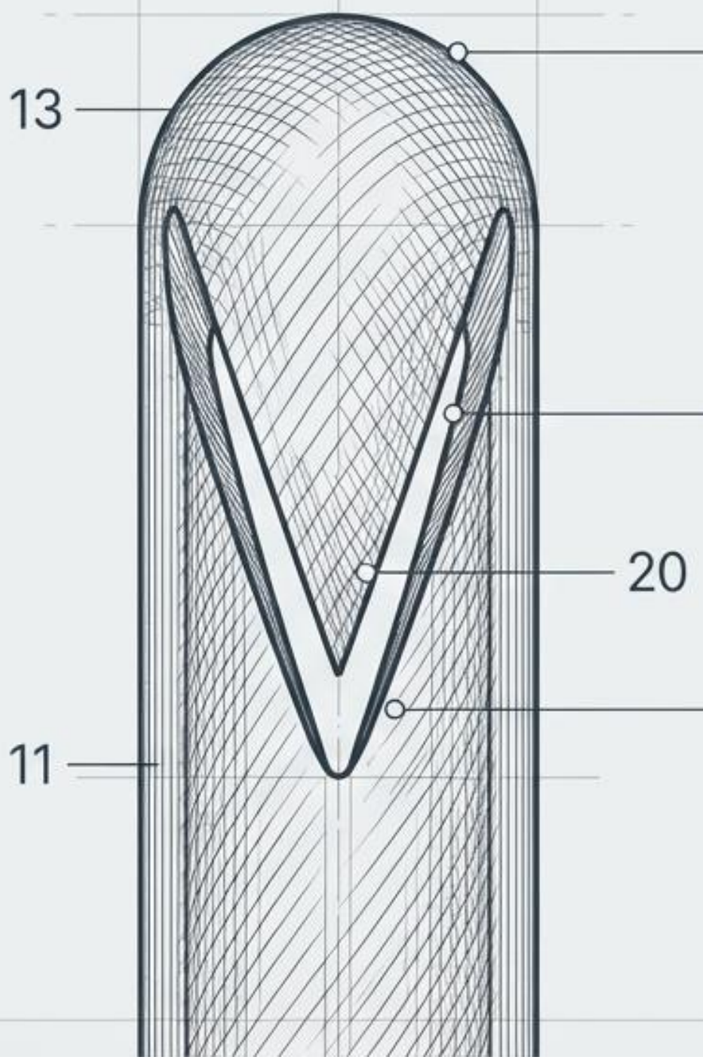

Smooth Closed-End Dome

The internal flow path is intentionally blocked at the terminal end. This engineered barrier mitigates the risk of direct frontal jetting and apical extrusion.

Double Lateral Vents

Two symmetrical slots positioned 180° apart force irrigant horizontally against the canal walls.

Precision Dimensions

Vents are engineered with a maximum length of 3.0mm and a width of 0.05–0.4mm to throttle flow and maximize lateral velocity.

NotebookLM

The Vortex-Like Flow Behavior

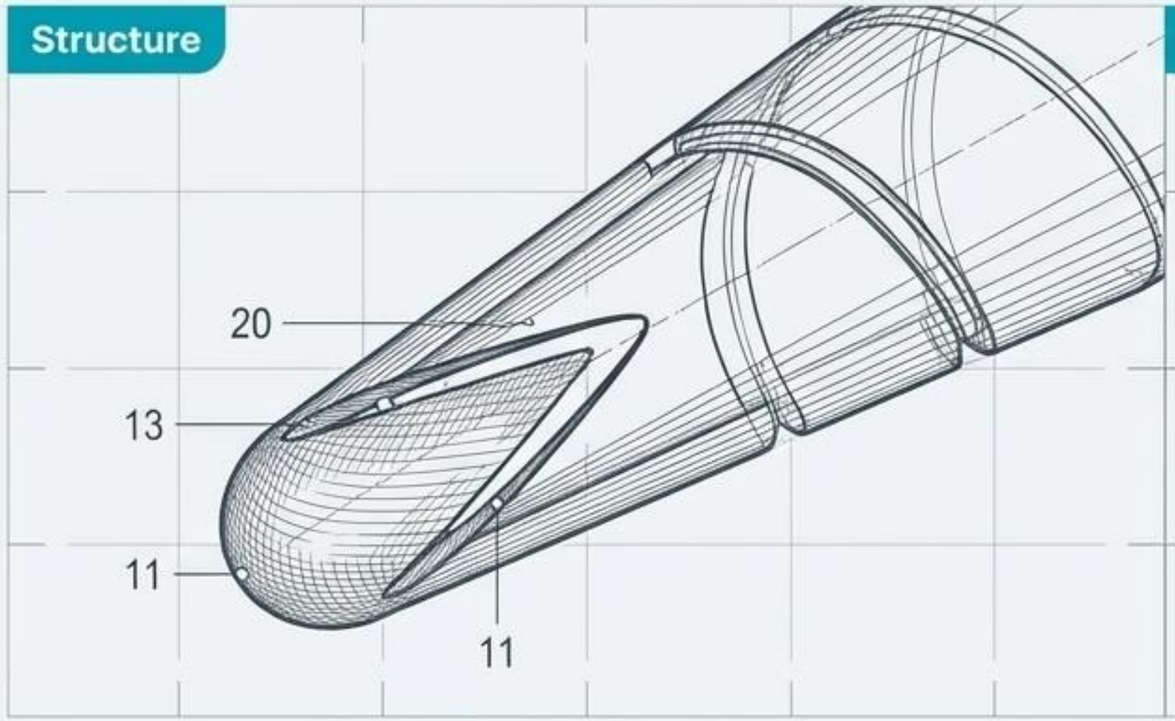

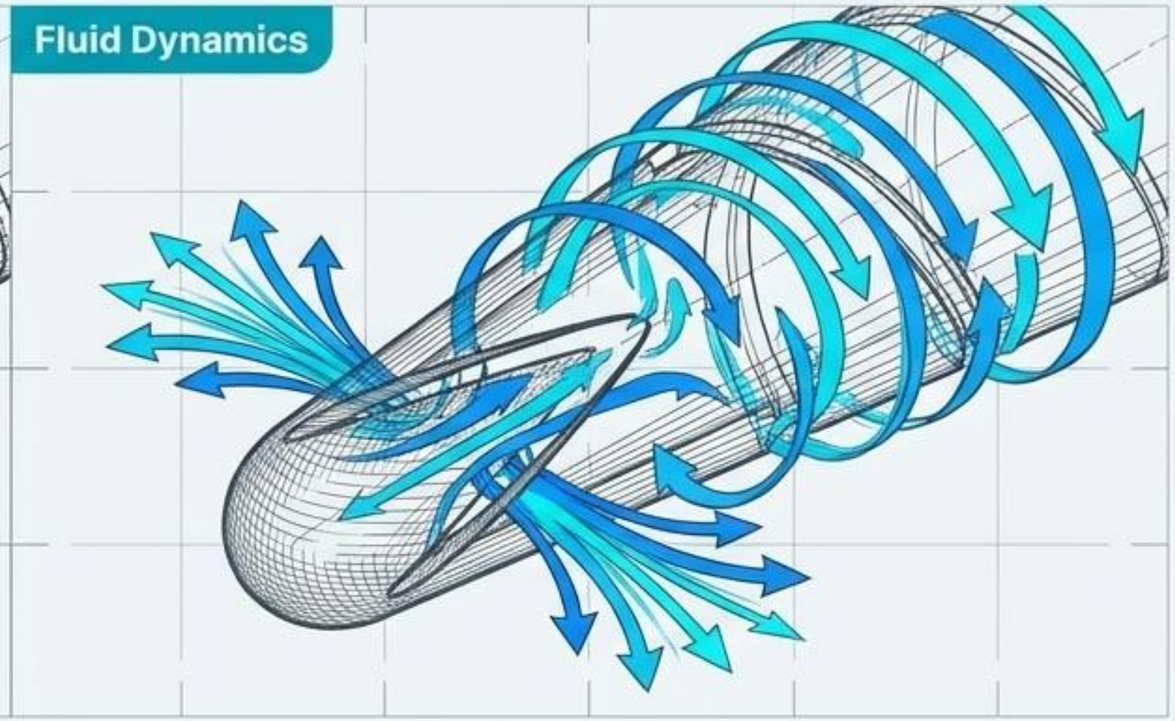

1 The Mechanism

As irrigant exits laterally, the external spiral channels guide the fluid into a rapid, rotational upward trajectory.

2 The Clinical Benefit

This intended vortex-like flow behavior maximizes coronal transport of dentin debris and depleted chemistry, ensuring fresh irrigant continuously reaches the critical apical third.

NotebookLM

Precision & Apical Safety

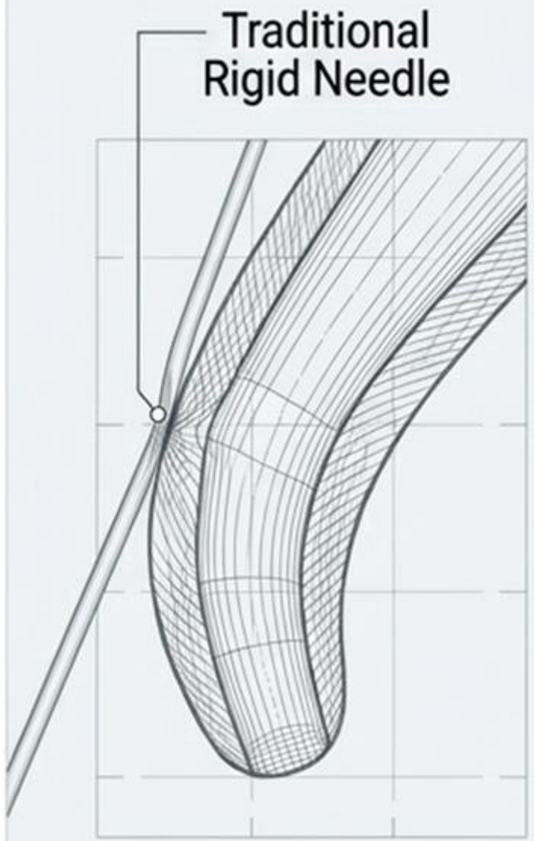

Unable to navigate severe curvatures, risking ledging and perforation.

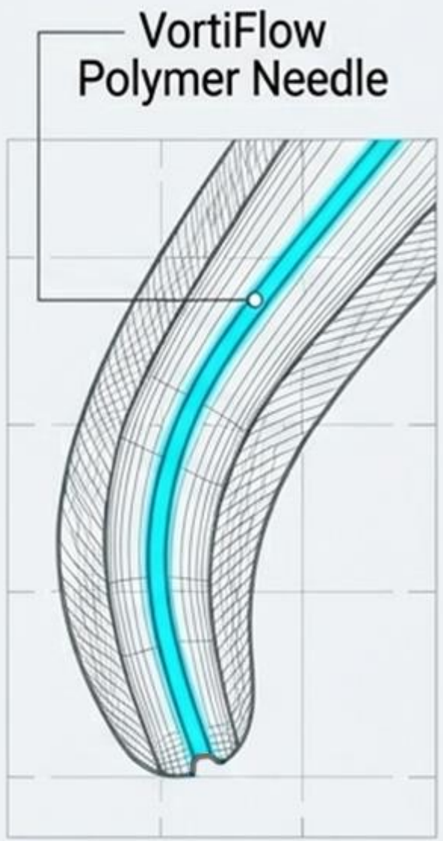

Seamless adaptation to severe curvatures without pre-bending.

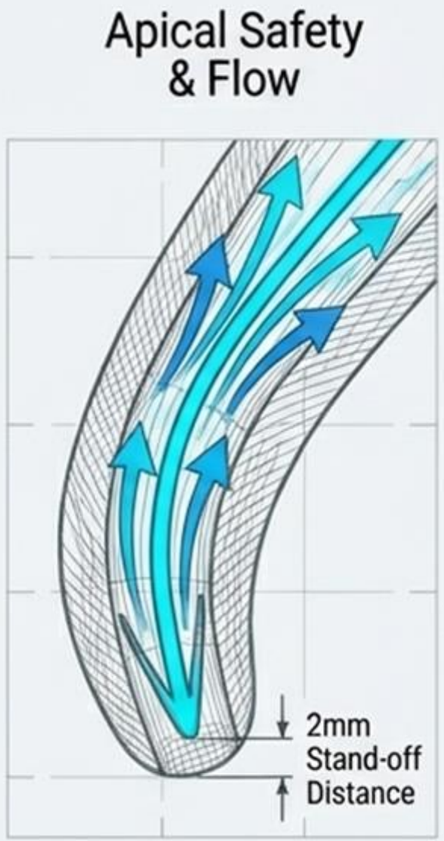

Controlled lateral exit and stand-off distance drastically reduce extrusion risks.

High-Flexibility Polymer

Designed to seamlessly adapt to severe canal curvatures (up to 60°) without the need for pre-bending.

Frictionless Glide

Smooth plastic material prevents binding, ledging, or unintended alteration of the prepared canal shape.

Continuous Flow & Safe Delivery

Maintains optimal internal flow rates while the lateral exit combined with a 2mm stand-off distance drastically reduces extrusion risks.

NotebookLM

Diagnostic Comparison Matrix

Standard Stainless Needles	VortiFlow Polymeric Needles
Direct Apical Jetting	**Engineered Lateral-Flow**
Rigid (requires manual pre-bending, risks jamming)	**Highly Flexible Polymeric** (adapts naturally to curvature)
Linear & Static	**Helical / Vortex-like Fluid Exchange**
High extrusion risk at length	**Closed-end** design supporting safe apical proximity

NotebookLM

The VortiFlow Protocol

01

01 | Position

Utilize the integrated shank markers to navigate the flexible 30-gauge tip precisely 1–2mm short of the calculated working length.

02

02 | Flow & Agitate

Depress the Luer-lock syringe using gentle forefinger pressure. Employ a 2–3mm vertical jiggling motion to facilitate continuous fluid exchange and shear stress.

03

03 | Replenish

Alternate chemical agents (NaOCl → EDTA → NaOCl), utilizing VortiFlow's rapid coronal clearing capabilities to continuously refresh the active oxidizers and chelators inside the canal.

NotebookLM

Precision Fluid Dynamics for the Apical Third.

Integrating seamlessly into your endodontic workflow, VortiFlow transforms standard irrigation into controlled, system-oriented fluid exchange. Engineered lateral flow and a unique helical channel concept support safe, continuous debris transport where instrumentation stops.

Explore the VortiFlow Design

View Technical Specifications

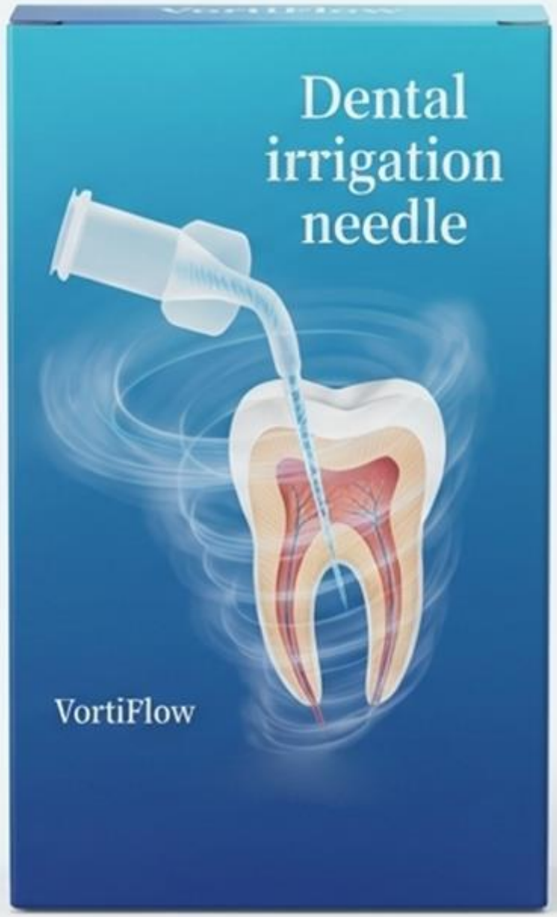

NotebookLM