Main Block Diagram
NFC READER

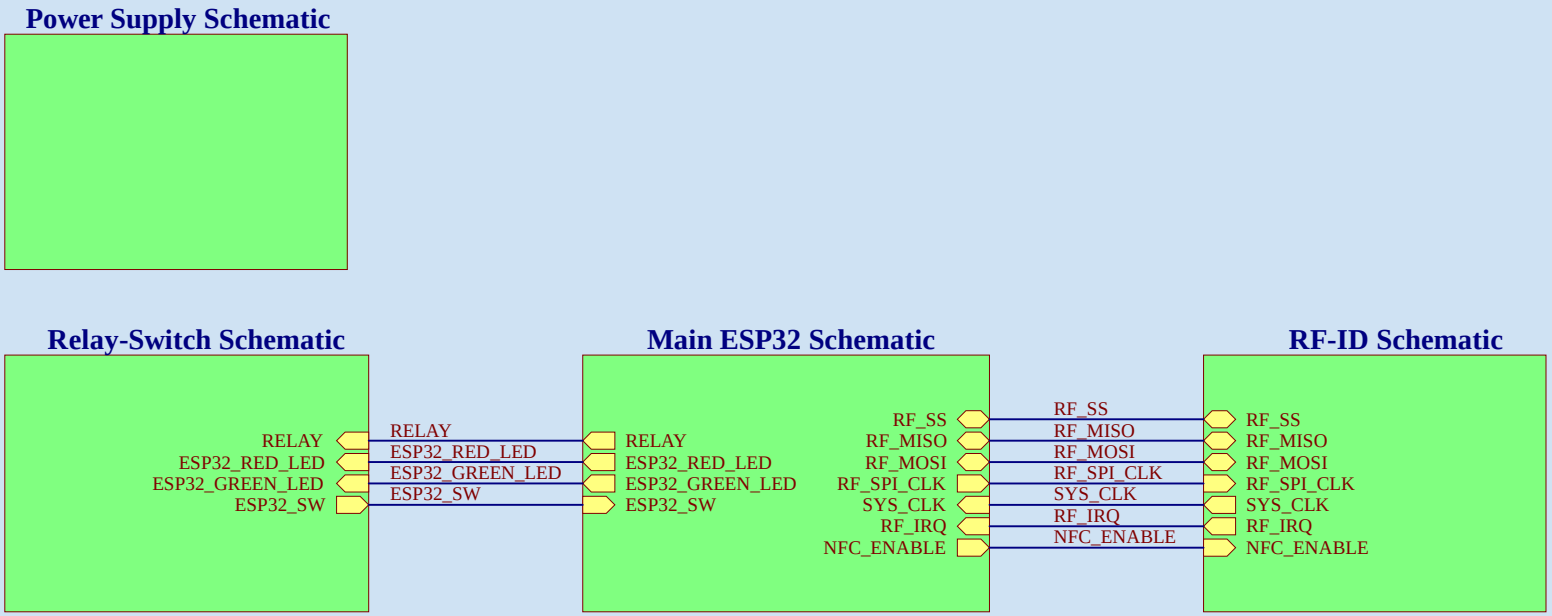

AHMED ELHADY

Title	Main Block Diagram OF NFC READER		
Size: A	Number:		Revision: V.1
Date: 11/16/2025		Sheet of	
File: D:\My Work\..\Main Block Diagram.SchDoc		Drawn By:	Ahmed Elhady

Power Supply Schematic

Input Voltage (+10VDC to +24VDC) Decoupling Circuit

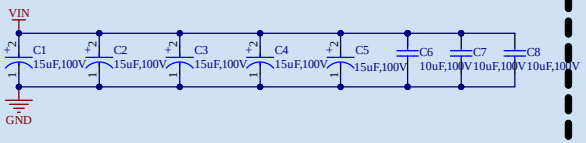

+12VDC Buck-Boost Switching Circuit

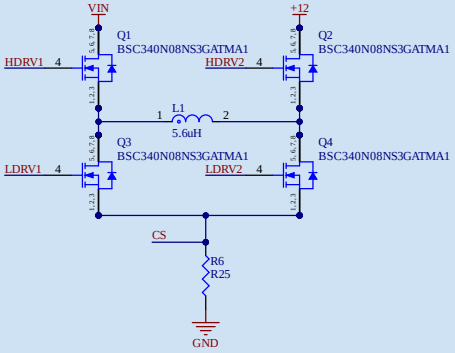

+12VDC Decoupling Circuit

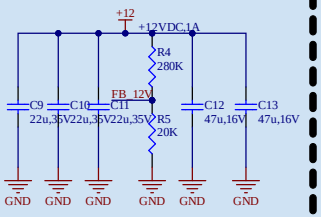

Main Buck-Boost Circuit

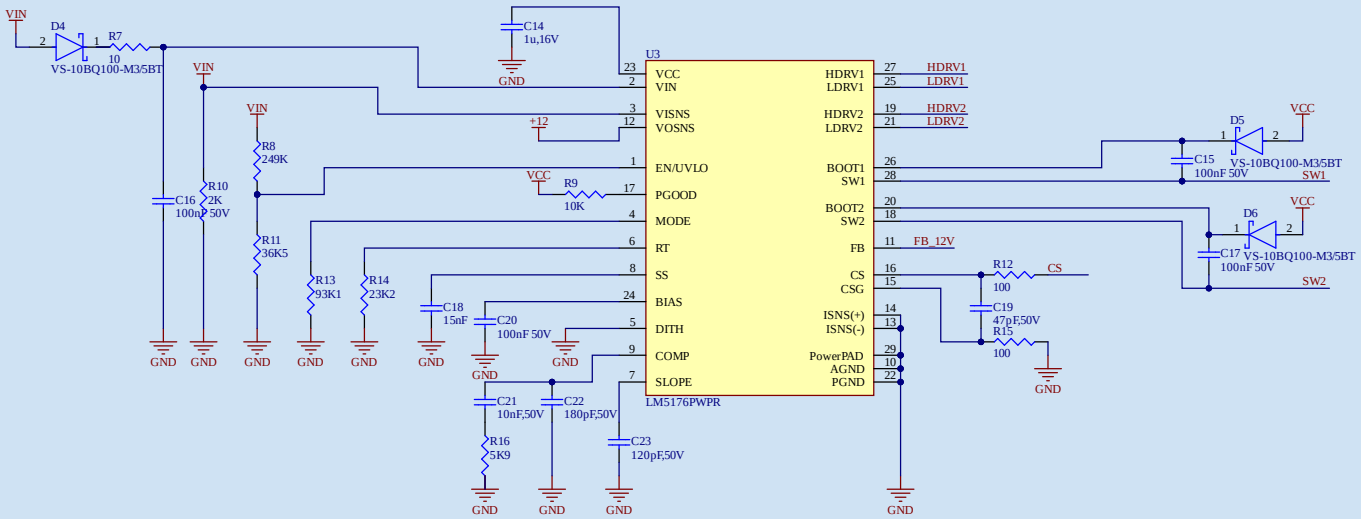

+12V to +5V Buck Circuit

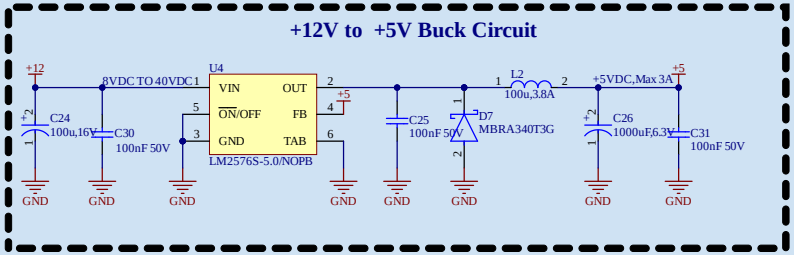

+5V TO +3V3 LDO Circuit

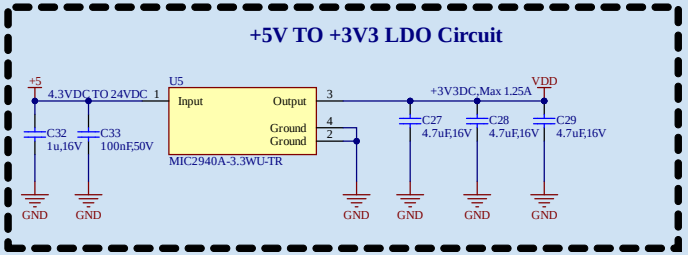

VDD(+3V3) Indication Circuit

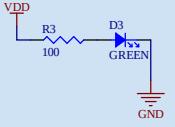

AHMED ELHADY

Title: Power Supply Schematic		
Size: A3	Number:	Revision: V.1
Date: 11/16/2025		Sheet of
File: D:\My Work\..\Power Supply.SchDoc		Drawn By: Ahmed Elhady

Main ESP32 Schematic

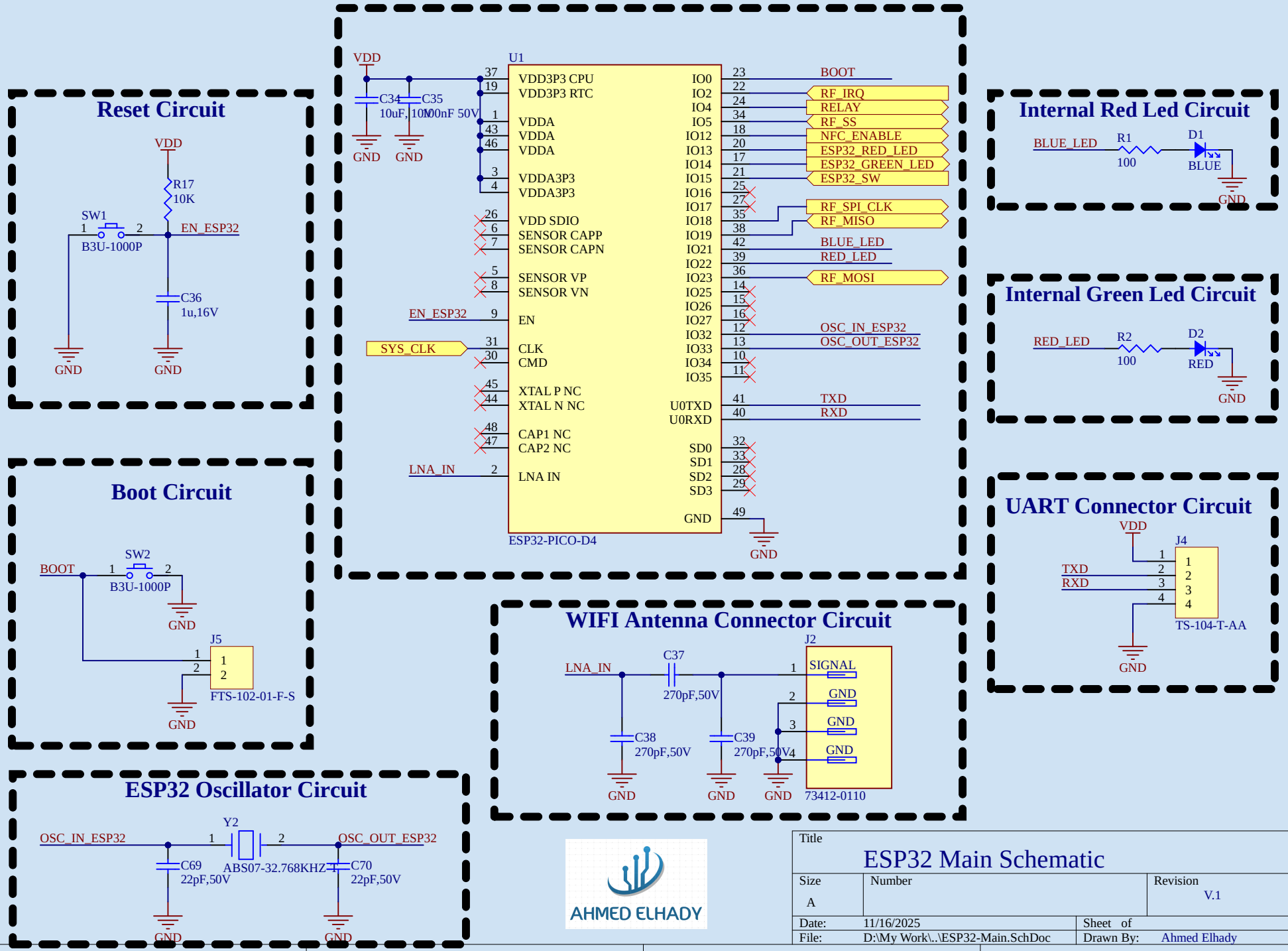

AHMED ELHADY

Title: ESP32 Main Schematic		
Size: A	Number:	Revision: V.1
Date: 11/16/2025		Sheet of
File: D:\My Work\..\ESP32-Main.SchDoc		Drawn By: Ahmed Elhady

RFID-Schematic

Imepedance Matching Circuit

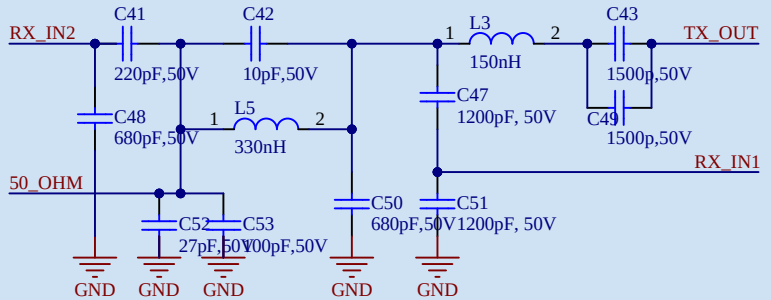

Tunning Circuit

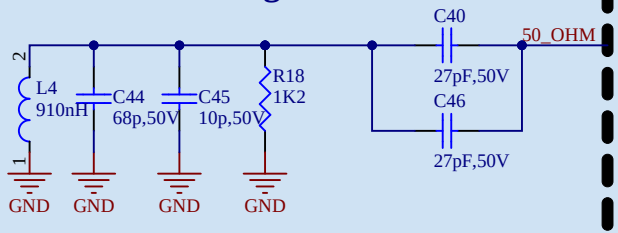

RF Antenna Connector

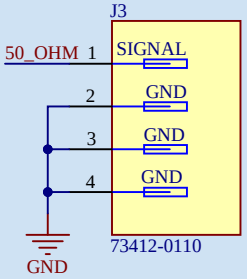

RF-ID Main Circuit

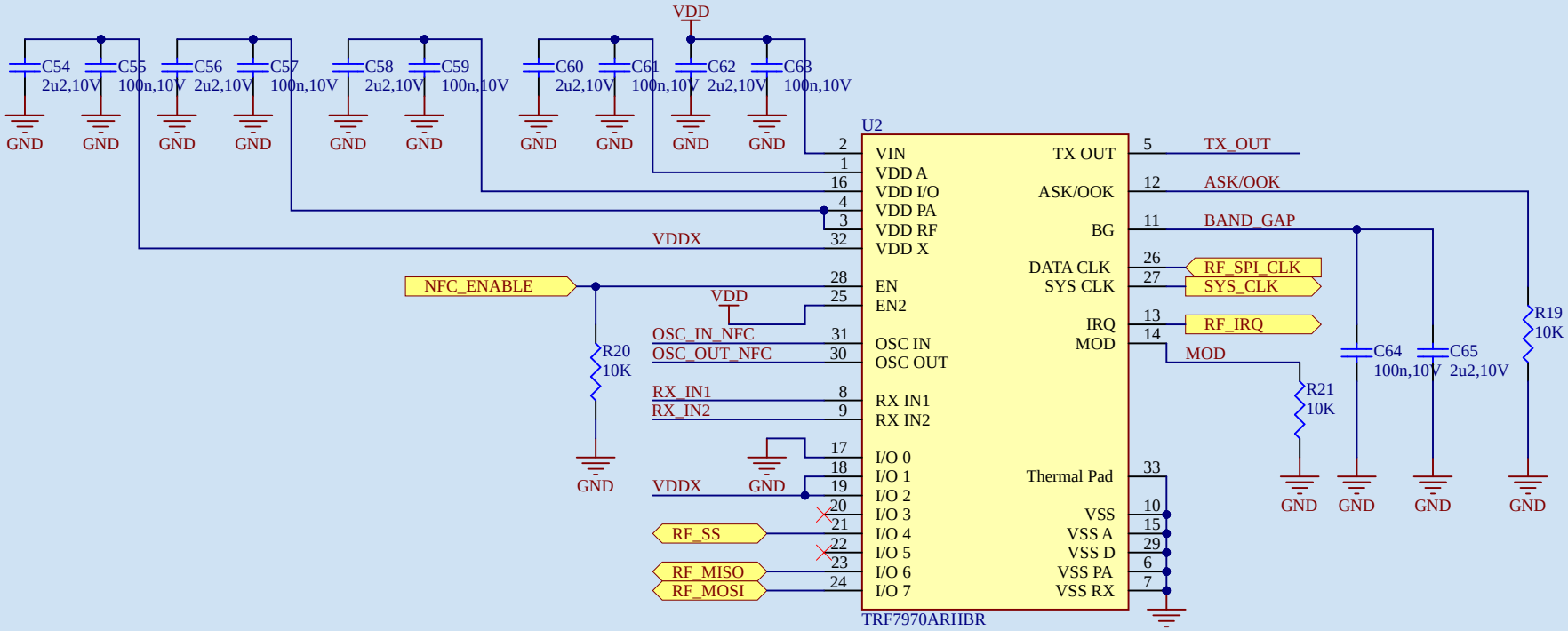

NFC Oscillator Circuit

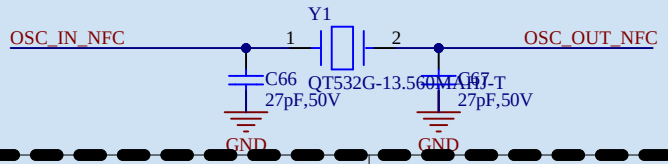

AHMED ELHADY

Title	RFID-Schematic		
Size: A	Number:	Revision: V.1	
Date: 11/16/2025		Sheet of	
File: D:\My Work\..\RFID-Reader.SchDoc		Drawn By: Ahmed Elhady	

Relay-Switch Schematic

Relay Control Circuit

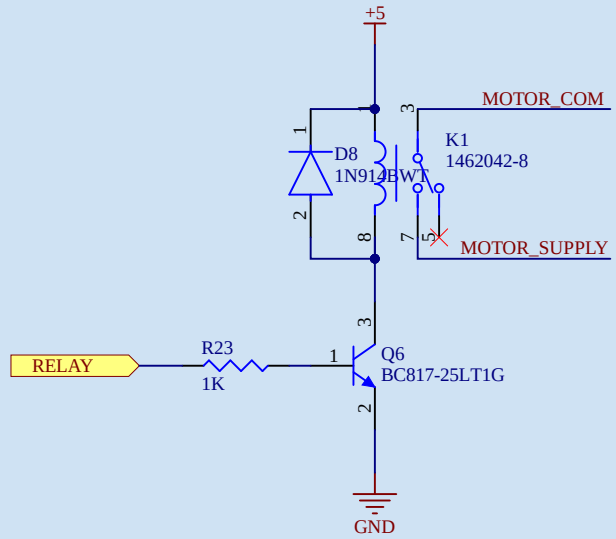

Ext. Red Led Circuit

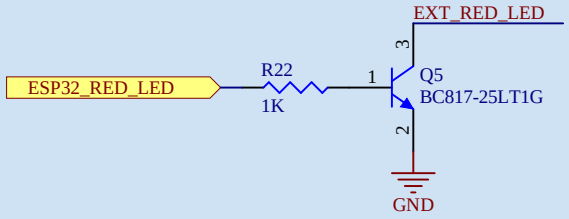

Ext. Red Green Circuit

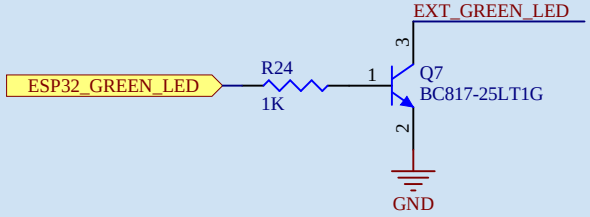

I/O Connector Circuit

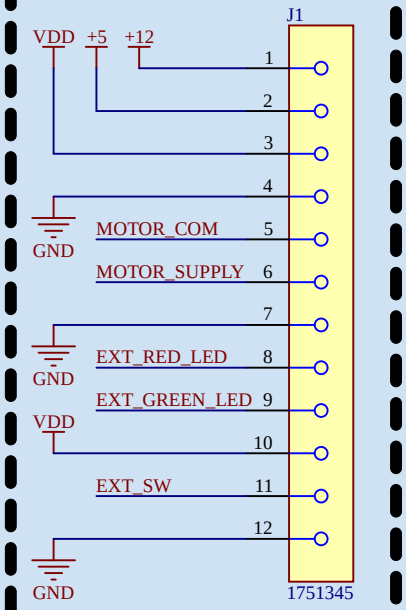

External Swirch Circuit

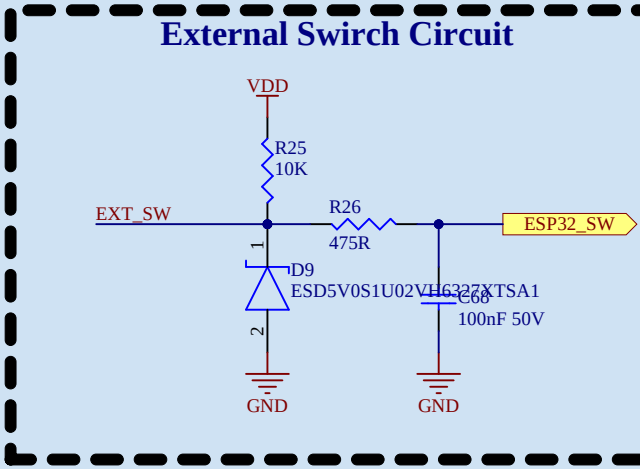

AHMED ELHADY

Title: Relay and Switch Schematic		
Size: A	Number:	Revision: V.1
Date: 11/16/2025		Sheet of
File: D:\My Work\..\Relay-Switch.SchDoc		Drawn By: Ahmed Elhady

GND SW +3V3 GLED RLED GND M-NO M-COM GND +3V3 +5V +12V
USER
RESET
GND RXD TXD +3V3

Comment	Description	Designator	Footprint	LibRef	Quantity
15uF,100V	15 µF 100 V Aluminum - Polymer Capacitors Radial, Can - SMD 40mOhm 1000 Hrs @ 125°C	C1, C2, C3, C4, C5	FP-SMT-CAP-15U-100V-ELECTROLTIC	100SXV15M	5
10uF,100V	10 µF ±10% 100V Ceramic Capacitor X7R 1210 (3225 Metric)	C6, C7, C8	CAP-1210-10U-100V	C3225X7R2A106K250AC	3
22u,35V	22 µF ±20% 35V Ceramic Capacitor X5R 0805 (2012 Metric)	C9, C10, C11	TDK_0805-22uF-35V	C2012X5R1V226M125AC	3
47u,16V	47 µF ±10% 16V Ceramic Capacitor X5R 1210 (3225 Metric)	C12, C13	cap1210-47u-16v	GRM32ER61C476KE15L	2
1u,16V	1 µF ±10% 16V Ceramic Capacitor X7R 0603 (1608 Metric)	C14, C32, C36	0603 (1608 Metric)-CAP-100NF-50V	EMK107B7105KA-T	3
100nF 50V	0.1 µF ±10% 50V Ceramic Capacitor X7R 0603 (1608 Metric)	C15, C16, C17, C20, C25, C30, C31, C35, C68	0603 (1608 Metric)-CAP-100NF-50V	CGA3E2X7R1H104K080AA	9
15nF	15nF ±5% 25V Ceramic Capacitor C0G, NP0 0603 (1608 Metric)	C18	0603-Cap-15nf-25v	C0603C153J3GACTU	1
47pF,50V	47 pF ±5% 50V Ceramic Capacitor C0G, NP0 0603 (1608 Metric)	C19	CAP-0603-47PF-50V	KGM15ACG1H470JT	1
10nF,50V	10000 pF ±10% 50V Ceramic Capacitor X7R 0402 (1005 Metric)	C21	CAPC1005X90N	CGA2B3X7R1H103K050BE	1
180pF,50V	180 pF ±10% 50V Ceramic Capacitor C0G, NP0 0805 (2012 Metric)	C22	C0805C-180pF-50V	C0805C181K5GACTU	1
120pF,50V	120 pF ±5% 50V Ceramic Capacitor C0G, NP0 0603 (1608 Metric)	C23	FP-0603-120PF-50V	CL10C121JB8NNNC	1
100u,16V	100 µF 16 V Aluminum Electrolytic Capacitors Radial, Can - SMD 260mOhm @ 100kHz 2000 Hrs @ 105°C	C24	CAP_EEEFP1C101AV	EEEFP1C101AV	1
1000uF,6.3V	1000 µF 6.3 V Aluminum Electrolytic Capacitors Radial, Can - SMD 80mOhm @ 100kHz 2000 Hrs @ 105°C	C26	CAP_1000uF-SMT	EEE-FP0J102AL	1
4.7uF,16V	4.7 µF ±20% 16V Ceramic Capacitor X5R 0402 (1005 Metric)	C27, C28, C29	CAPC1005X90N	CL05A475MO5NUNC	3
100nF,50V	0.1 µF ±10% 50V Ceramic Capacitor X7R 0603 (1608 Metric)	C33	0603 (1608 Metric)-CAP-100NF-50V	CGA3E2X7R1H104K080AA	1
10uF, 10V	10 µF ±20% 10V Ceramic Capacitor X5R 0402 (1005 Metric)	C34	CAPC1005X90N	CL05A106MP8NUB8	1
270pF,50V	270 pF ±5% 50V Ceramic Capacitor C0G, NP0 0402 (1005 Metric)	C37, C38, C39	0402_470pF_50VMurata_GCM155-0_05_MFG	GCM1555C1H271JA16D	3
27pF,50V	27 pF ±5% 50V Ceramic Capacitor C0G, NP0 0402 (1005 Metric)	C40, C46, C52, C66, C67	C0402-27pf-50V	CC0402JRNPO9BN270	5
220pF,50V	220 pF ±5% 25V Ceramic Capacitor C0G, NP0 0402 (1005 Metric)	C41	220pf-50v-0402-yageo-CAPC1005X55N	CC0402JRNPO8BN221	1
10pF,50V	10 pF ±5% 50V Ceramic Capacitor C0G, NP0 0402 (1005 Metric)	C42	YAGEO_10pf-50v-CC0402JRNPO9BN100_0	CC0402JRNPO9BN100	1
1500p,50V	1500 pF ±10% 50V Ceramic Capacitor X7R 0402 (1005 Metric)	C43, C49	C0402-1500pF-Murata_GRM15_MFG	GRM155R71H152KA01D	2
68p,50V	68 pF ±5% 50V Ceramic Capacitor C0G, NP0 0402 (1005 Metric)	C44	TDK_C1005-68pf-50v	C1005C0G1H680J050BA	1
10p,50V	10 pF ±5% 50V Ceramic Capacitor C0G, NP0 0402 (1005 Metric)	C45	YAGEO_10pf-50v-CC0402JRNPO9BN100_0	CC0402JRNPO9BN100	1
1200pF, 50V	1200 pF ±10% 50V Ceramic Capacitor X7R 0402 (1005 Metric)	C47, C51	1200F-50V-0402-Murata_GRM15_MFG	GRM155R71H122KA01D	2
680pF,50V	680 pF ±10% 50V Ceramic Capacitor X7R 0402 (1005 Metric)	C48, C50	Kemet_C0402-680PF-50	C0402C681K5RACTU	2
100pF,50V	100 pF ±5% 50V Ceramic Capacitor C0G, NP0 0402 (1005 Metric)	C53	100pf-50v-0402-Murata_GRM15_MFG	GRM1555C1H101JA01D	1
2u2,10V	2.2 µF ±10% 10V Ceramic Capacitor X7R 0402 (1005 Metric)	C54, C56, C58, C60, C62, C65	C0402-2.2u-10V-Murata_GRM155-0_2_MFG	GRM155Z71A225KE44D	6
100n,10V	0.1 µF ±10% 10V Ceramic Capacitor X7R 0402 (1005 Metric)	C55, C57, C59, C61, C63, C64	C0402-100nF-10V	CL05B104KP5NNNC	6
22pF,50V	22 pF ±5% 50V Ceramic Capacitor C0G, NP0 0603 (1608 Metric)	C69, C70	22Pf_50V_Kemet_C0603C220J5GACTU_0	C0603C220J5GACTU	2
BLUE	Blue 472nm LED Indication - Discrete 2.8V 0402 (1005 Metric)	D1	LED0402B	VLMB1500-GS08	1
RED	Red 631nm LED Indication - Discrete 2V 0402 (1005 Metric)	D2	LED0402R	VLMS1500-GS08	1
GREEN	Yellow-Green 571nm LED Indication - Discrete 2V 0402 (1005 Metric)	D3	LED0402G	VLMG1500-GS08	1
VS-10BQ100-M3/5BT	Rectifier Diode Schottky 100V 1A 2-Pin SMB T/R / DIODE SCHOTTKY 100V 1A SMB	D4, D5, D6	Diode Schottky 100V 1A 2-Pin SMB T/R / DIODE SCHOTTK	VS-10BQ100-M3/5BT	3
MBRA340T3G	Diode; Schottky Barrier; Vr 40V; If 3A; Pkg SMA; Vf 0.45V; Tj +150degc; Cs 100A; Ir 15mA	D7	Diode-SMD-Schotty-40V-3A	MBRA340T3G	1
1N914BWT	Diode 75 V 200mA Surface Mount SOD-523F	D8	1N914BWT_dIODE_smd_ON_Semiconductor_502-01_MFG	1N914BWT	1
ESD5V0S1U02VH6327XTSA1	14.5V (Typ) Clamp 5.5A (8/20µs) Ipp Tvs Diode Surface Mount PG-SC79-2-1	D9	tvs_diode_Infineon_PG-SC79-2_MFG	ESD5V0S1U02VH6327XTSA1	1
1751345	12 Position Wire to Board Terminal Block Horizontal with Board 0.138" (3.50mm) Through Hole	J1	Terminal_Block_12pin_screw_Phoenix_Contact_1751345_0	1751345	1
73412-0110	U.FL (UMCC) ANTENNA Connector Receptacle, Male Pin 50 Ohms Surface Mount Solder	J2, J3	ANT_CONN_Molex_734-12-0110_0	73412-0110	2
TS-104-T-AA	4 Position Header Connector Post Tin	J4	4pins-SAMTEC_TS-104-T-AA	TS-104-T-AA	1
FTS-102-01-F-S	Connector Header Through Hole 2 position 0.050" (1.27mm)	J5	HDR1X2_1.27MM	FTS-102-01-F-S	1
1462042-8	Telecom Relay SPDT (1 Form C) Surface Mount	K1	RELAY_SPDT_TE_1462042-8_0	1462042-8	1
5.6uH	5.6 µH Shielded Molded Inductor 7.2 A 25.8mOhm Max Nonstandard	L1	Coilcraft_XAL5050_MFG	XAL5050-562MEC	1
100u,3.8A	100 µH Shielded Molded Inductor 3.8 A 161mOhm Max Nonstandard	L2	COIL-SMD-100U-3.8A	AMDLA1306Q-101MT	1
150nH	150 nH Unshielded Drum Core, Wirewound Inductor 800 mA 220mOhm Max 1008 (2520 Metric)	L3	150nH-SMD2	744762215A	1
910nH	910 nH Unshielded Drum Core, Wirewound Inductor 380 mA 1.68Ohm Max 1008 (2520 Metric)	L4	COIL_910nH_SMD	BWCS00292821R91J00	1
330nH	330 nH Unshielded Drum Core, Wirewound Inductor 500 mA 900mOhm Max 1008 (2520 Metric)	L5	330nh-SMD2	744762233A	1
BSC340N08NS3GATMA1	N-Channel 80 V 7A (Ta), 23A (Tc) 2.5W (Ta), 32W (Tc) Surface Mount PG-TDSON-8-5	Q1, Q2, Q3, Q4	TDSON-8-MOSFET-N-CHANNEL	BSC340N08NS3GATMA1	4
BC817-25LT1G	Bipolar (BJT) Transistor NPN 45 V 500 mA 100MHz 300 mW Surface Mount SOT-23-3 (TO-236)	Q5, Q6, Q7	transitor_npn_ONSC-SOT-23-3-318-08_V	BC817-25LT1G	3
100	100 Ohms ±1% 0.125W, 1/8W Chip Resistor 0603 (1608 Metric) Automotive AEC-Q200 Thick Film	R1, R2, R3, R12, R15	0603-RES-10OHM-0.1W	CRCW0603100RFKEA	5
280K	280 kOhms ±1% 0.125W, 1/8W Chip Resistor 0603 (1608 Metric) Automotive AEC-Q200 Thick Film	R4	Vishay_CRCW0603-280k	CRCW0603280KFKEA	1
20K	20 kOhms ±1% 0.1W, 1/10W Chip Resistor 0603 (1608 Metric) Moisture Resistant Thick Film	R5	20K-0603-Yageo_-_Phycomp_RC0603_0	RC0603FR-0720KL	1
R25	25 mOhms ±1% 0.5W, 1/2W Chip Resistor 1206 (3216 Metric) Current Sense Thick Film	R6	RESC3015X65N-25mohm	CSR1206FK25L0	1
10	10 Ohms ±1% 0.1W, 1/10W Chip Resistor 0603 (1608 Metric) Moisture Resistant Thick Film	R7	0603-RES-10OHM-0.1W	CRCW060310R0FKEA	1
249K	249 kOhms ±1% 0.063W, 1/16W Chip Resistor 0402 (1005 Metric) Automotive AEC-Q200 Thick Film	R8	RESC1005X37N	CRCW0402249KFKED	1
10K	10 kOhms ±1% 0.1W, 1/10W Chip Resistor 0603 (1608 Metric) Moisture Resistant Thick Film	R9, R17, R19, R20, R21, R25	YAGEO-0603-10K-0.1W	RC0603FR-0710KL	6
2K	2 kOhms ±1% 0.125W, 1/8W Chip Resistor 0805 (2012 Metric) Automotive AEC-Q200 Thick Film	R10	2K_0.125W_RESC2013X70X40NL20T20	ERJ-6ENF2001V	1
36K5	36.5 kOhms ±1% 0.063W, 1/16W Chip Resistor 0402 (1005 Metric) Automotive AEC-Q200, Moisture Resistant Thick Film	R11	RESC1005X37N	AC0402FR-0736K5L	1
93K1	93.1 kOhms ±1% 0.1W, 1/10W Chip Resistor 0603 (1608 Metric) Moisture Resistant Thick Film	R13	RC0603_MFG-93.1k	RC0603FR-0793K1L	1
23K2	23.2 kOhms ±1% 0.063W, 1/16W Chip Resistor 0402 (1005 Metric) Automotive AEC-Q200 Thick Film	R14	RESC1005X37N	CRCW040223K2FKED	1
5K9	5.9 kOhms ±1% 0.063W, 1/16W Chip Resistor 0402 (1005 Metric) Automotive AEC-Q200 Thick Film	R16	RESC1005X37N	CRCW04025K90FKED	1
1K2	1.2 kOhms ±5% 0.063W, 1/16W Chip Resistor 0402 (1005 Metric) Moisture Resistant Thick Film	R18	RESC1005X40N-1.2k	RC0402JR-071K2L	1
1K	1 kOhms ±5% 0.125W, 1/8W Chip Resistor 0603 (1608 Metric) Automotive AEC-Q200 Thick Film	R22, R23, R24	1K_0603_KOA_Speer_RK73B1J_MFG	RK73B1JTTD102J	3
475R	475 Ohms ±1% 0.1W, 1/10W Chip Resistor 0603 (1608 Metric) Automotive AEC-Q200 Thick Film	R26	475R_0603_Panasonic_ERJ3EK_MFG	ERJ-3EKF4750V	1
B3U-1000P	Switch Tactile N.O. SPST Round Button Solder Tab 12VDC 50mA 200000Cycles 1.5N SMD Emboss T/R	SW1, SW2	SW_PUSHBOTTON_B3U-1000P	B3U-1000P	2
ESP32-PICO-D4	Bluetooth, WiFi 802.11b/g/n, Bluetooth v4.2 +EDR, Class 1, 2 and 3 Transceiver Module 2.4GHz ~ 2.5GHz Surface Mount	U1	Espressif_Systems_0_IPC_B	ESP32-PICO-D4	1
TRF7970ARHBR	RFID Reader/Transponder IC 13.56MHz ISO 14443, ISO 15693, ISO 18000-3 SPI 2.7V ~ 5.5V 32-VFQFN Exposed Pad	U2	NFC_FP_TRF7970ARHBR	TRF7970ARHBR	1
LM5176PWPR	Buck-Boost Regulator Positive Output Step-Up/Step-Down DC-DC Controller IC 28-HTSSOP	U3	FP-TSSOP28-BUCK-BOOST-LM5176PWPR	LM5176PWPR	1
LM2576S-5.0/NOPB	Buck Switching Regulator IC Positive Fixed 5V 1 Output 3A TO-263-6, D2PAK (5 Leads + Tab), TO-263BA	U4	DPAK-LM2576S-5.0/NOPB	LM2576S-5.0/NOPB	1
MIC2940A-3.3WU-TR	Linear Voltage Regulator IC Positive Fixed 1 Output 1.25A TO-263-3	U5	FP-TO263-3LD-REG-BUCK-3.3V	MIC2940A-3.3WU-TR	1
QT532G-13.560MAHJ-T	13.56 MHz ±30ppm Crystal 18pF 50 Ohms 2-SMD, No Lead	Y1	Crystal-13.56 MHz	QT532G-13.560MAHJ-T	1
ABS07-32.768KHZ-T	32.768 kHz ±20ppm Crystal 12.5pF 70 kOhms 2-SMD, No Lead	Y2	CRYSTAL_32.768kHZ_FPABS07-MFG	ABS07-32.768KHZ-T	1