Space defence

Table of Contents

1. Objective
2. Circuit diagram
3. Working principle
4. Truth Table
5. PCB design
5. List of components

Objective:

This project aims to apply digital logic design concepts in creating a game inspired by Space Defence. It involves using digital circuits and logic to achieve game functions such as controlling weapons, activating defense systems, and eliminating monsters based on logical inputs and conditions.

circuit diagram

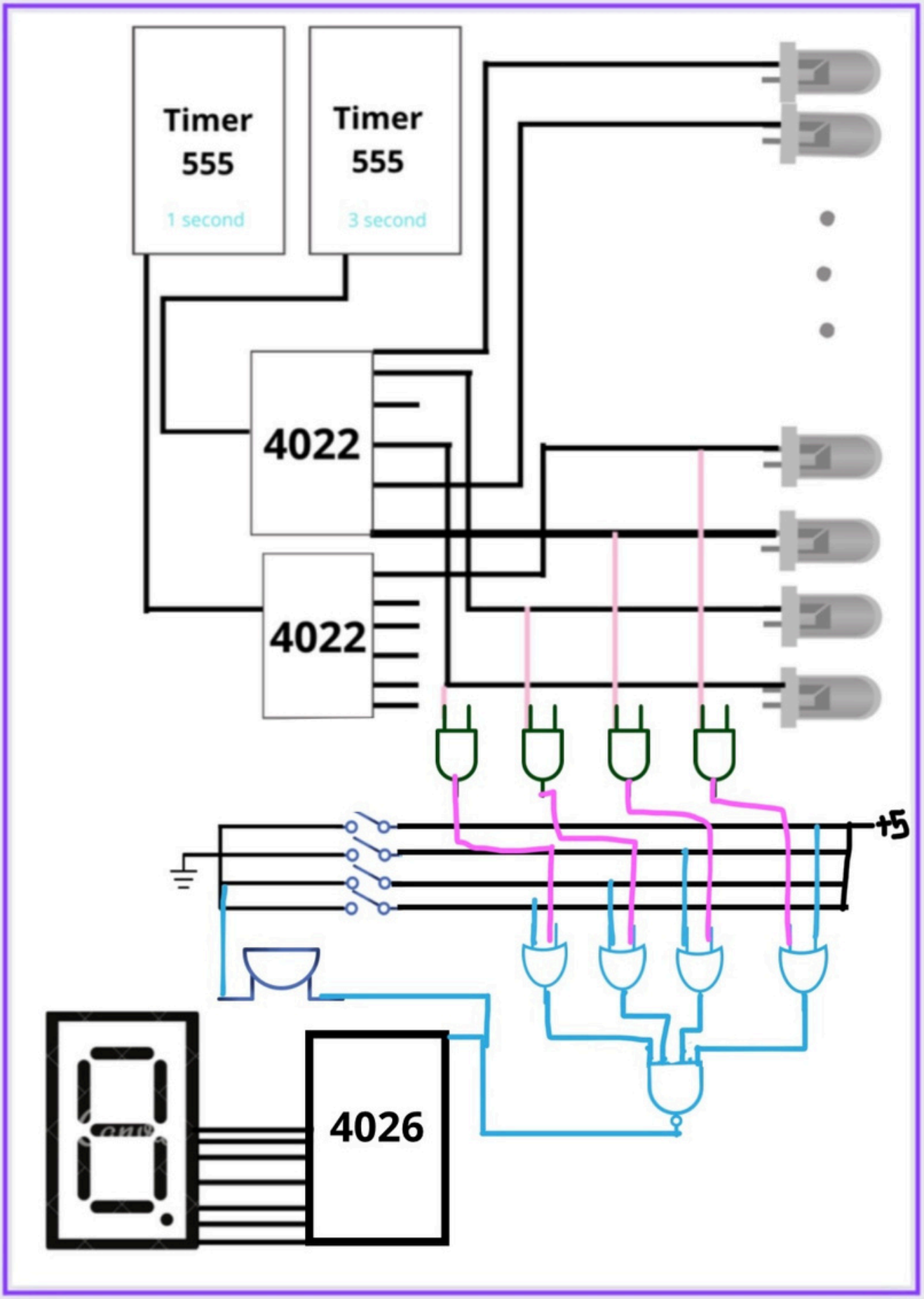

WORKINGP RINCIPLE

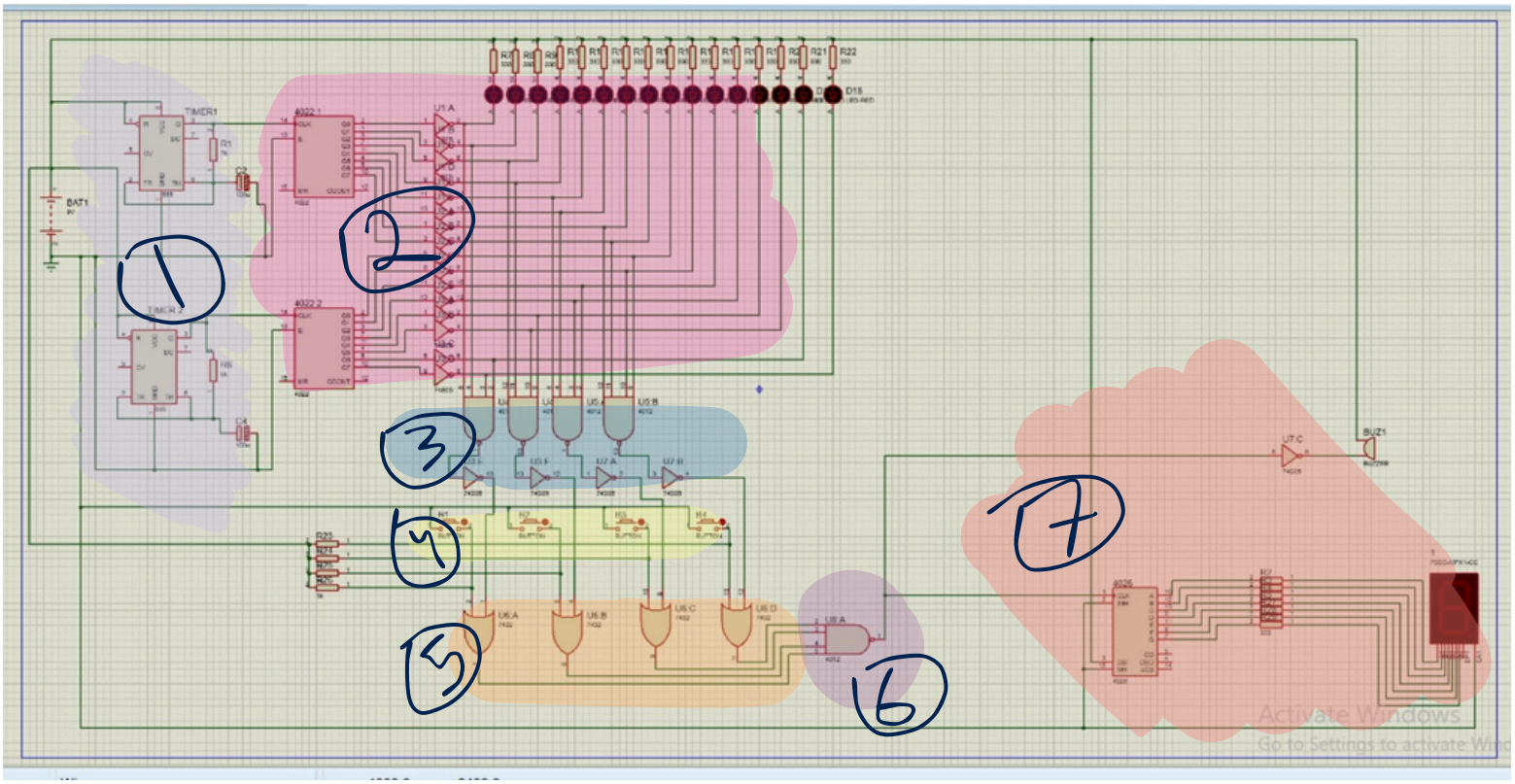

1. In this circuit timer has been used in ASTABLE MODE .
in this mode the timer generates continuous pulses of specific frequency and duration,functioning as an oscillator.

2. Two decoders were used, and the outputs of each decoder depend on the connected timer.
The outputs of the decoders were connected to inverters to make the circuit operate as 'active low'.
The 'on' LEDs represent the space monsters that need to be eliminated.

3. NAND + inverter gates were used to categorize the space monsters into four primary groups, facilitating their elimination later on.
The group containing a monster outputs zero, while the one without monsters yields a value of one.

*Initially, we utilized the AND gate, but due to its unavailability, it was substituted with these gates.

4. The switches function as weapons to eliminate the space monsters. Pressing a switch indicates the use of the weapon: 'logic = 1, voltage = 0'.

5. The OR gates serve to determine whether the elimination of the monster has occurred or not. If the output equals zero, it indicates the elimination of one of the monsters within that group. Conversely, if the output equals one, it signifies that no monster has been eliminated yet."

6. This gate functions as an aggregator of information from all groups. If the output of this gate equals one, it signifies the elimination of a monster within one of the groups using one of the weapons. However, if the output is zero, it means that none of the monsters have been eliminated yet.

7. The SSD and buzzer were employed to display the count of times the monsters were eliminated. The inverter connected to the buzzer operates it as 'active low'.

truth tables

Inputs				Output
Monster 1	Monster 2	monster 3	Monster 4	group A
1	1	1	1	1 No monster
1	0	1	1	0 a monster appears
0	1	1	1	0 a monster appears
0	0	0	0	✕

"This condition will never occur because the groups were designed not to contain more than two monsters at a time."

		Output
group A	weapon A	The state of monster in grop A
1	0 or 1	1
0	1	1
0	0	0

A monster has been eliminated

				Output
The state of monster in grop A	The state of monster in grop B	The state of monster in grop C	The state of monster in grop D	counting "step 6"
1	1	1	1	0
1	1	1	0	1
1	0	1	0	1
0	0	0	0	✕

"An impossible scenario, as the circuit was designed so that among the four groups, only two groups at maximum could hold a monster simultaneously."

PCB

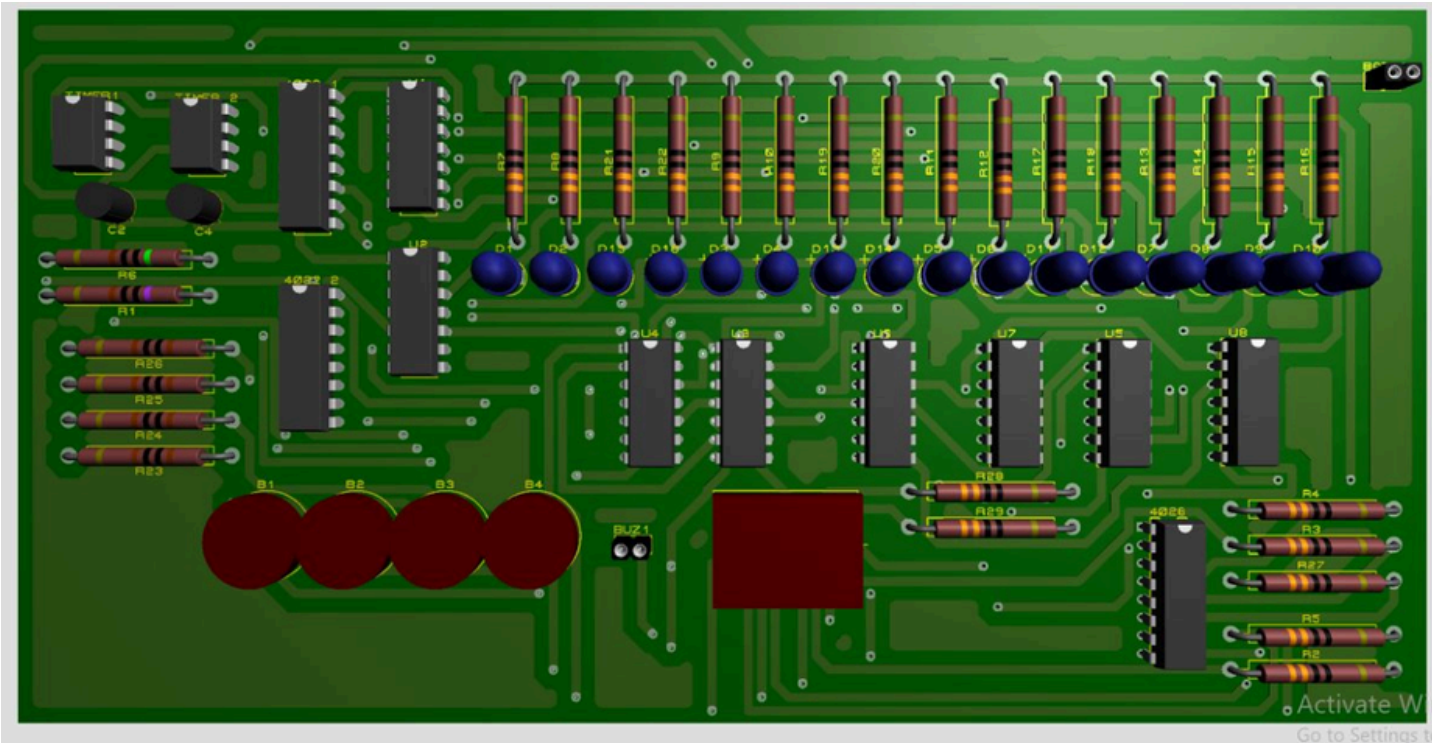
C2
C4
R6
R1
R26
R25
R24
R23
B1
B2
B3
B4
BUZ1
U4
U6
U7
U5
U8
R29
R28
4026
R4
R3
R27
R5
R2

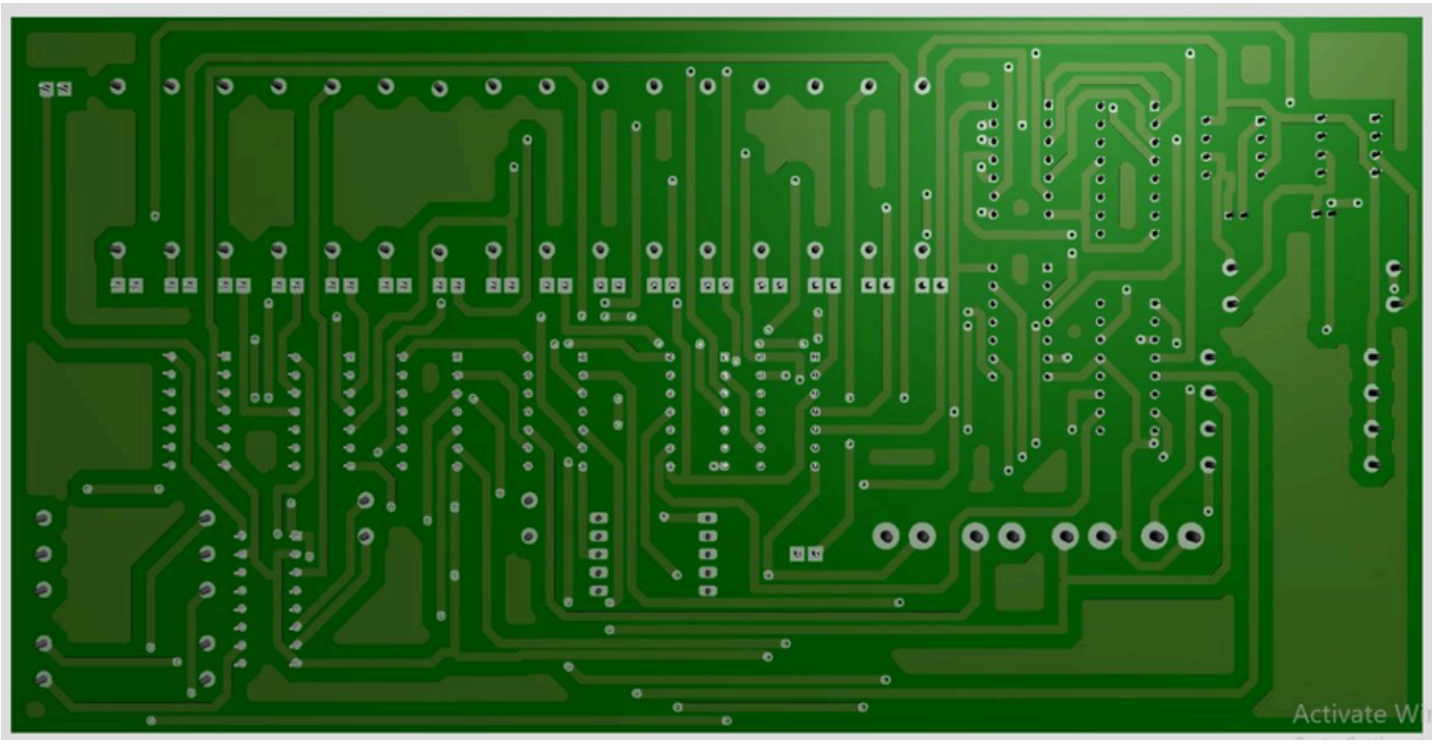

Top view

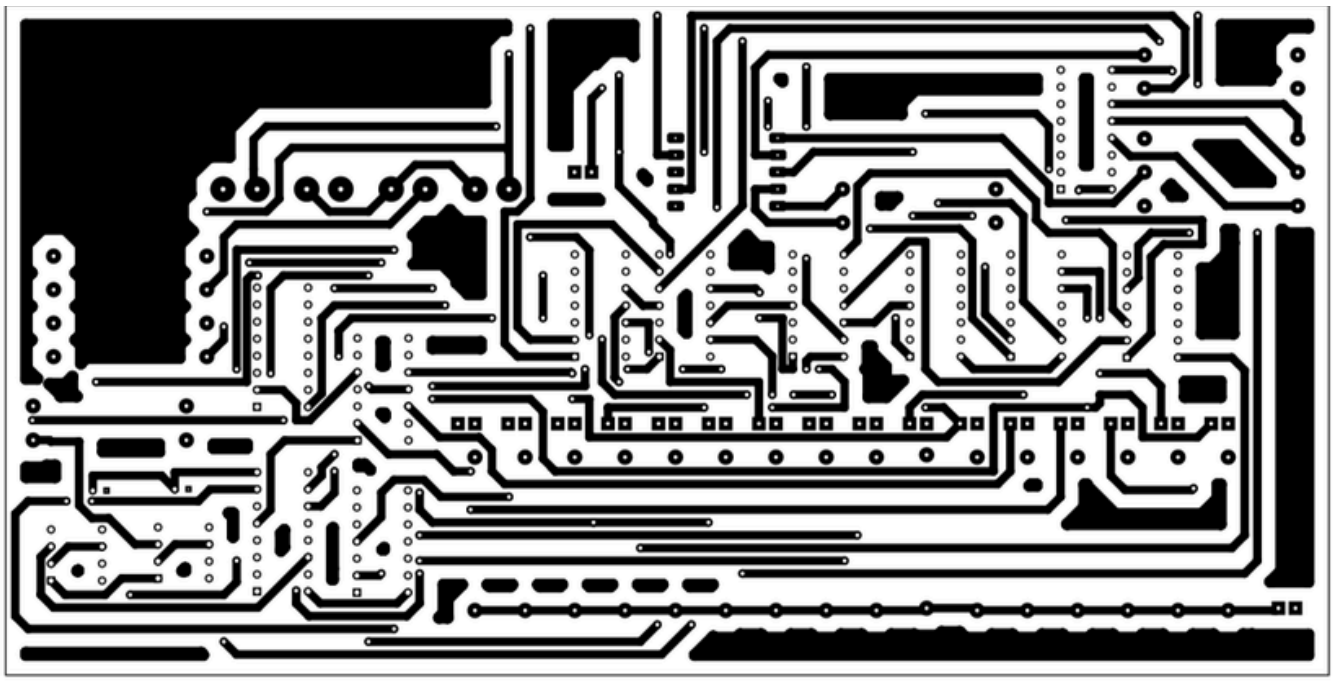

bottom view

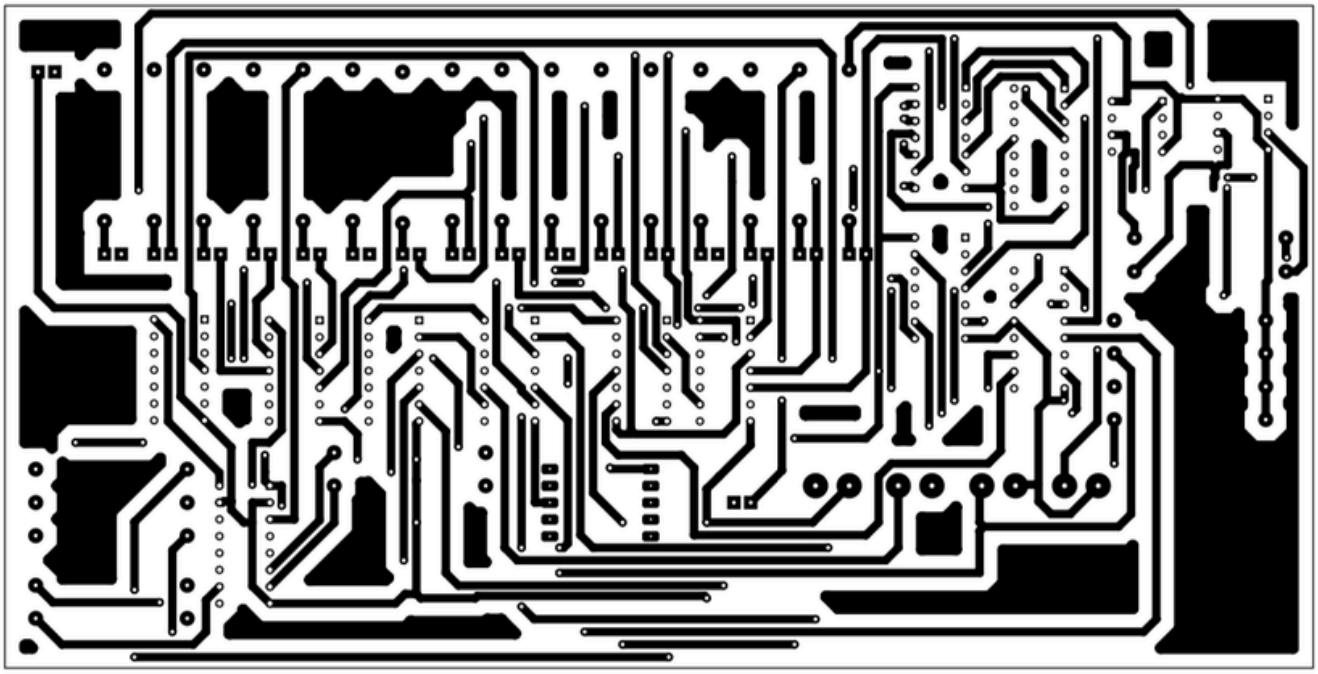

list of components

Bill Of Materials for space defence.DLD PROJECT.pdsprj (1)

Design Title	space defence.DLD PROJECT.pdsprj (1)
Author	
Document Number	
Revision	
Design Created	Sunday, December 24, 2023
Design Last Modified	Sunday, December 24, 2023
Total Parts In Design	67

2 Capacitors

Quantity	References	Value	Stock Code	Unit Cost
2	C2,C4	100u	Digikey P953-ND	
Sub-totals:				$0.00

29 Resistors

Quantity	References	Value	Stock Code	Unit Cost
1	R1	7k		
23	R2-R5,R7-R22,R27-R29	330		
1	R6	5k		
4	R23-R26	1k		
Sub-totals:				$0.00

8 Integrated Circuits

Quantity	References	Value	Stock Code	Unit Cost
4	U1-U3,U7	74S05		
3	U4-U5,U8	4012		
1	U6	7432		
Sub-totals:				$0.00

16 Diodes

Quantity	References	Value	Stock Code	Unit Cost
16	D1-D16	LED-RED		
Sub-totals:				$0.00

12 Miscellaneous

Quantity	References	Value	Stock Code	Unit Cost
1	1	7SEG-MPX1-CC		
1	4026	4026		
2	4022 1-4022 2	4022		
4	B1-B4	BUTTON		
1	BAT1	9V		
1	BUZ1	BUZZER		
2	TIMER1,TIMER 2	555		
Sub-totals:				$0.00

Totals:	$0.00

Sunday, December 24, 2023 5:41:27 AM