1 Honeycomb Lattice and Sublattices

Graphene is a two-dimensional crystal of carbon atoms arranged in a honeycomb lattice (thanks to the sp^2 hybridization of each carbon atom). Equivalently, one can view it as two interpenetrating triangular sublattices, labeled A and B. Each atom on sublattice A has three nearest neighbors on sublattice B, forming 120° angles. The carbon-carbon (C–C) nearest-neighbor distance is denoted by

$$a_{\text{C–C}} \;=\; a\,,$$

and the primitive lattice vectors (connecting two equivalent sites on the same sublattice) may be chosen as (a_3 is considered positive and unitary along the orthogonal direction of the lattice during some vectorial calculi).

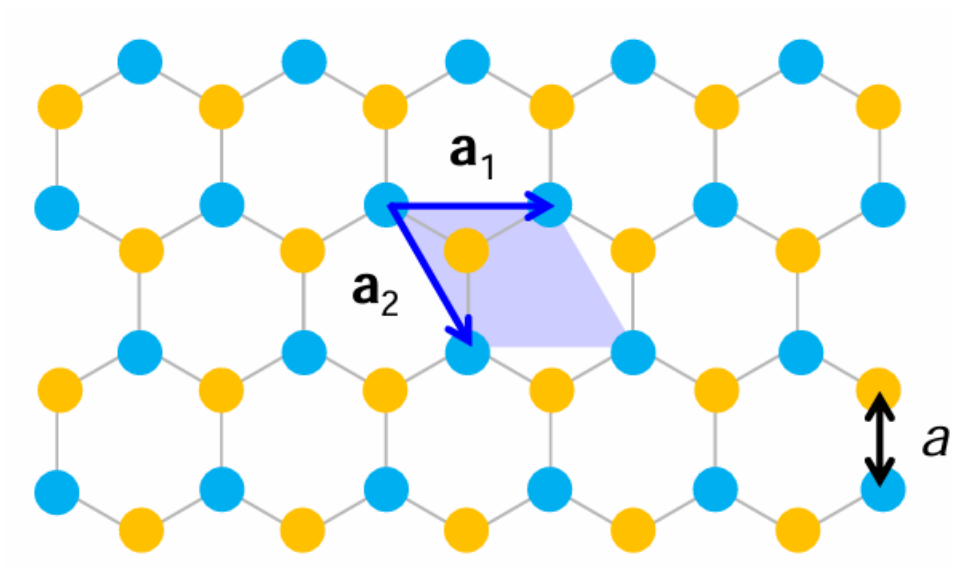

$$\begin{cases} \mathbf{a}_1 \;=\; |a_1|(\cos(0),\sin(0)) = 2a\cos\frac{\pi}{6}\cdot(1,0) \;=\; 2a\frac{\sqrt{3}}{2}\cdot(1,0) \;=\; a\left(\sqrt{3},\,0\right), \\ \mathbf{a}_2 \;=\; |a_2|(\sin(30),-\cos(30)) = 2a\cos\frac{\pi}{6}\cdot(\sin(30),-\cos(30)) = 2a\frac{\sqrt{3}}{2}\cdot(\frac{1}{2},-\frac{\sqrt{3}}{2}) \;=\; a\left(\frac{\sqrt{3}}{2},\,-\frac{3}{2}\right) \end{cases} \tag{1}$$

A convenient choice of the three nearest-neighbor vectors from an A-site to its B-neighbors is obtained from image below, where we use three vectors u_i that are along the C-C bonds. Thus:

$$\begin{aligned} \boldsymbol{u}_1 &= |u_1|\cdot\left(\cos\frac{\pi}{2},\sin\frac{\pi}{2}\right) \;=\; a\left(0,\,1\right), \\ \boldsymbol{\delta}_2 &= |u_2|\cdot\left(-\cos\frac{\pi}{6},-\sin\frac{\pi}{6}\right) \;=\; a\left(-\frac{\sqrt{3}}{2},\,-\frac{1}{2}\right), \\ \boldsymbol{\delta}_3 &= |u_3|\cdot\left(\cos\frac{\pi}{6},-\sin\frac{\pi}{6}\right) \;=\; a\left(\frac{\sqrt{3}}{2},\,-\frac{1}{2}\right). \end{aligned} \tag{2}$$

Here each A atom at position $\mathbf{r}_A$ has three nearest neighbors at $\mathbf{r}_A + \boldsymbol{u}_i$ for $i = 1, 2, 3$, all belonging to sublattice B.

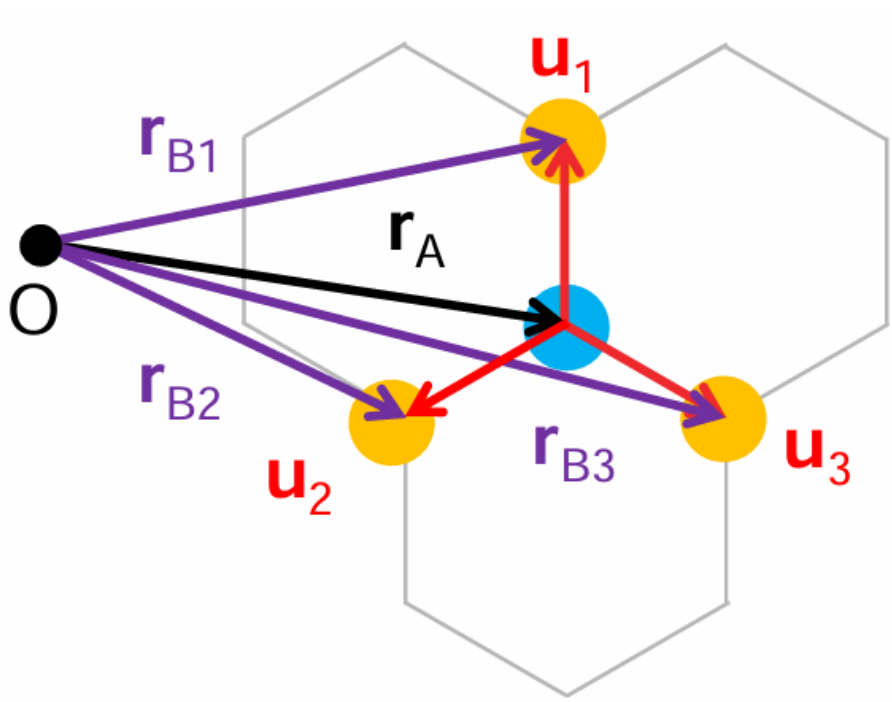

1.1 Reciprocal Lattice and Dirac (K) Points

The primitive vectors in real space $(\mathbf{a}_1, \mathbf{a}_2)$ generate a reciprocal-lattice basis $\mathbf{b}_1, \mathbf{b}_2$ defined by

$$\mathbf{b}_i = \frac{2\pi}{V}\mathbf{a}_j \times \mathbf{a}_k, \quad V = \mathbf{a}_1(\mathbf{a}_2 \times \mathbf{a}_3), \quad i, j, k = 1, 2, 3 \text{ (and cyclic permutations).}$$

One finds:

$$V = \det \begin{pmatrix} a\sqrt{3} & 0 & 0 \\ a\frac{\sqrt{3}}{2} & -a\frac{3}{2} & 0 \\ 0 & 0 & 1 \end{pmatrix} = |a\sqrt{3} \cdot \left(-a\frac{3}{2}\right)| = a^2\frac{3\sqrt{3}}{2}$$

Moreover:

$$\begin{cases} a_1 \times a_2 = \det \begin{pmatrix} i & j & k \\ a\sqrt{3} & 0 & 0 \\ a\frac{\sqrt{3}}{2} & -a\frac{3}{2} & 0 \end{pmatrix} = a\sqrt{3} \cdot \left(a\frac{3}{2}\right)\hat{k} \\ a_2 \times a_3 = \det \begin{pmatrix} i & j & k \\ a\frac{\sqrt{3}}{2} & -a\frac{3}{2} & 0 \\ 0 & 0 & 1 \end{pmatrix} = \left(-a\frac{3}{2}\hat{i} - a\frac{\sqrt{3}}{2}\hat{j}\right) \\ a_3 \times a_1 = \det \begin{pmatrix} i & j & k \\ 0 & 0 & 1 \\ a\sqrt{3} & 0 & 0 \end{pmatrix} = a\sqrt{3}\hat{j} \end{cases}$$

Thus:

$$\begin{cases} \mathbf{b}_1 = \frac{2\pi}{V}a_2 \times a_3 = \frac{2\pi}{a^2\frac{3\sqrt{3}}{2}}\left(-a\frac{3}{2}\hat{i} - a\frac{\sqrt{3}}{2}\hat{j}\right) = \frac{2\pi}{a}\left(-\frac{1}{\sqrt{3}}, -\frac{1}{3}\right) \\ \mathbf{b}_2 = \frac{2\pi}{V}a_3 \times a_1 = \frac{2\pi}{a^2\frac{3\sqrt{3}}{2}}a\sqrt{3}\hat{j} = \frac{2\pi}{a}\left(0, -\frac{2}{3}\right) \end{cases} \tag{3}$$

b_3 is not important for our case-study. The first Brillouin zone (IBZ) is a regular hexagon

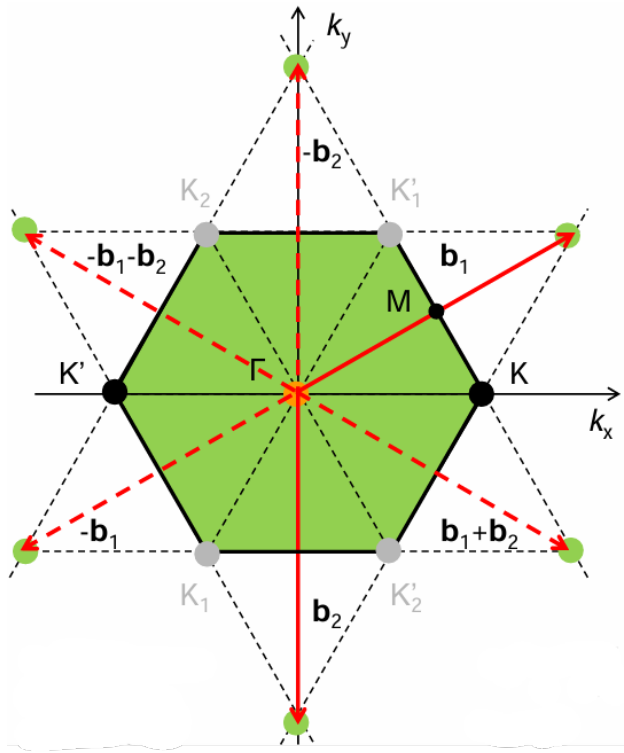

in **k**-space. Of special importance are the two inequivalent corners, called the Dirac points K and K'. Explicitly, one convenient choice is

$$\mathbf{K} \;=\; \frac{4\pi}{3\sqrt{3}a}\,(1,\,0), \qquad \mathbf{K}' \;=\; -\,\mathbf{K} \;=\; \frac{4\pi}{3\sqrt{3}a}\,(-1,\,0). \tag{4}$$

At these (non-equivalent) points, the conduction and valence bands touch, giving rise to graphene's gapless "Dirac" spectrum. All the other Dirac points can be obtained through a linear combination of the b_1, b_2 vectors with the vector that points to the Dirac point K/K' starting from Γ (center of the IBZ). The derivation of the coordinates of the K point will follow in next sections.

2 Tight-Binding Wavefunction and Bloch Ansatz

We assume each carbon atom contributes a single $2p_z$ orbital (often denoted $\phi_A(\mathbf{r}-\mathbf{r}_{A_i})$ or $\phi_B(\mathbf{r}-\mathbf{r}_{B_j})$). In the *nearest-neighbor* tight-binding approximation, we write the Bloch-sum trial wavefunction for a given crystal-momentum $\mathbf{k}=(k_x,k_y)$:

$$\Psi_{\mathbf{k}}(\mathbf{r}) \;=\; \psi_A(\mathbf{k})\sum_{i\in A} e^{i\mathbf{k}\cdot\mathbf{r}_{A_i}}\;\phi_A(\mathbf{r}-\mathbf{r}_{A_i}) \;+\; \psi_B(\mathbf{k})\sum_{j\in B} e^{i\mathbf{k}\cdot\mathbf{r}_{B_j}}\;\phi_B(\mathbf{r}-\mathbf{r}_{B_j})\,. \tag{5}$$

Here:

- $\psi_A(\mathbf{k})$, $\psi_B(\mathbf{k})$ are complex coefficients (sub-lattice amplitudes) to be determined.

- The sums run over all Bravais lattice sites $\mathbf{r}_{A_i}$ in sublattice A and $\mathbf{r}_{B_j}$ in sublattice B.
- We assume orthonormal atomic orbitals: $\langle \phi_A(\mathbf{r}-\mathbf{r}_{A_i}) \,|\, \phi_A(\mathbf{r}-\mathbf{r}_{A_{i'}})\rangle = \delta_{ii'}$, and similarly for B. Cross-terms $\langle \phi_A \,|\, \phi_B\rangle$ are negligible (zero overlap).

By Bloch's theorem, translating by any lattice vector $\mathbf{R} = n_1\mathbf{a}_1 + n_2\mathbf{a}_2$ multiplies the wavefunction by $e^{i\mathbf{k}\cdot\mathbf{R}}$. Because of this translation symmetry, the coefficients $\psi_A(\mathbf{k})$ and $\psi_B(\mathbf{k})$ *do not* depend on which unit cell or which index i, j.

3 Tight-Binding Hamiltonian and Coupled Equations

The full Hamiltonian H acts on the Bloch state $\Psi_{\mathbf{k}}(\mathbf{r})$ and yields the eigenvalue equation

$$H\,\Psi_{\mathbf{k}}(\mathbf{r}) \;=\; E(\mathbf{k})\,\Psi_{\mathbf{k}}(\mathbf{r}). \tag{6}$$

In the nearest-neighbor approximation, the only non-zero hopping matrix elements are between an A-site and its three nearest B-sites (and vice-versa). We denote the hopping energy by

$$-\gamma \;=\; \langle \phi_A(\mathbf{r}-\mathbf{r}_A) \,|\, H \,|\, \phi_B(\mathbf{r}-\mathbf{r}_{B_j})\rangle, \quad \gamma > 0 \text{ (if } -\gamma > 0 \text{ the jumps would be forbidden).}$$

All other matrix elements are assumed either zero (no overlap for same-sublattice islands) or accounted for by setting each on-site energy reference to zero. Hence, projecting Eq. (6) onto $\langle \phi_A(\mathbf{r}-\mathbf{r}_A)|$ and $\langle \phi_B(\mathbf{r}-\mathbf{r}_B)|$ yields two coupled equations:

Projection onto sublattice A:

$$\big\langle \phi_A(\mathbf{r}-\mathbf{r}_A) \,\big|\, H\,\Psi_{\mathbf{k}}(\mathbf{r})\big\rangle \;=\; E(\mathbf{k})\,\psi_A(\mathbf{k})\,e^{i\mathbf{k}\cdot\mathbf{r}_A}.$$

Since an A-site at $\mathbf{r}_{A_i}$ has three nearest neighbors at $\mathbf{r}_{B_j} = \mathbf{r}_A + \boldsymbol{u}_n$ (for $n = 1, 2, 3$), each contributing a hopping $-\gamma$, one finds

$$\sum_{n=1}^{3}\big\langle \phi_A(\mathbf{r}-\mathbf{r}_A) \,|\, H \,|\, \phi_B(\mathbf{r}-\mathbf{r}_A-\boldsymbol{u}_n)\big\rangle\,\psi_B(\mathbf{k})\,e^{i\mathbf{k}\cdot(\mathbf{r}_A+\boldsymbol{u}_n)} \;=\; E(\mathbf{k})\,\psi_A(\mathbf{k})\,e^{i\mathbf{k}\cdot\mathbf{r}_A}.$$

But $\langle \phi_A|H|\phi_B\rangle = -\gamma$, so

$$-\gamma\,\psi_B(\mathbf{k})\sum_{n=1}^{3} e^{i\mathbf{k}\cdot(\mathbf{r}_A+\boldsymbol{u}_n)} \;=\; E(\mathbf{k})\,\psi_A(\mathbf{k})\,e^{i\mathbf{k}\cdot\mathbf{r}_A}.$$

Canceling the common factor $e^{i\mathbf{k}\cdot\mathbf{r}_A}$ (independent of n):

$$-\gamma\,\psi_B(\mathbf{k})\underbrace{\sum_{n=1}^{3} e^{i\mathbf{k}\cdot\boldsymbol{u}_n}}_{f(\mathbf{k})} \;=\; E(\mathbf{k})\,\psi_A(\mathbf{k}), \tag{7}$$

where we have defined

$$f(\mathbf{k}) \;=\; \sum_{n=1}^{3} e^{i\mathbf{k}\cdot\boldsymbol{u}_n} \;=\; e^{i\mathbf{k}\cdot\boldsymbol{u}_1} \;+\; e^{i\mathbf{k}\cdot\boldsymbol{u}_2} \;+\; e^{i\mathbf{k}\cdot\boldsymbol{u}_3}. \tag{8}$$

Projection onto sublattice B: Similarly, projecting onto $\langle\phi_B(\mathbf{r}-\mathbf{r}_B)|$ yields

$$\sum_{n=1}^{3}\big\langle\phi_B(\mathbf{r}-\mathbf{r}_B)\,|\,H\,|\,\phi_A(\mathbf{r}-\mathbf{r}_B-(-\boldsymbol{u}_n))\big\rangle\,\psi_A(\mathbf{k})\,e^{\,i\mathbf{k}\cdot(\mathbf{r}_B-\boldsymbol{u}_n)} \;=\; E(\mathbf{k})\,\psi_B(\mathbf{k})\,e^{\,i\mathbf{k}\cdot\mathbf{r}_B}.$$

Because $\mathbf{r}_B-\boldsymbol{u}_n=\mathbf{r}_{A_i}$ for appropriate i and $\langle\phi_B|H|\phi_A\rangle=-\gamma$, we obtain

$$-\gamma\,\psi_A(\mathbf{k})\sum_{n=1}^{3}e^{\,i\mathbf{k}\cdot(\mathbf{r}_B-\boldsymbol{u}_n)} \;=\; E(\mathbf{k})\,\psi_B(\mathbf{k})\,e^{\,i\mathbf{k}\cdot\mathbf{r}_B}.$$

Again canceling the common $e^{\,i\mathbf{k}\cdot\mathbf{r}_B}$, $\boldsymbol{u}_n$ appears with opposite signs, so we get:

$$-\gamma\,\psi_A(\mathbf{k})\underbrace{\sum_{n=1}^{3}e^{-\,i\mathbf{k}\cdot\boldsymbol{u}_n}}_{f^*(\mathbf{k})} \;=\; E(\mathbf{k})\,\psi_B(\mathbf{k}). \tag{9}$$

4 Matrix Form of the Hamiltonian and Energy Eigenvalues

Equations (7) and (9) can be compactly written in matrix form as

$$\begin{pmatrix} 0 & -\gamma\,f(\mathbf{k}) \\ -\gamma\,f^*(\mathbf{k}) & 0 \end{pmatrix}\begin{pmatrix}\psi_A(\mathbf{k})\\ \psi_B(\mathbf{k})\end{pmatrix} \;=\; E(\mathbf{k})\begin{pmatrix}\psi_A(\mathbf{k})\\ \psi_B(\mathbf{k})\end{pmatrix}.$$

Through a system:

$$\begin{cases} -\gamma\psi_B f = E\psi_A \\ -\gamma\psi_A f^* = E\psi_B \end{cases}$$

Define the 2×2 Hamiltonian matrix

$$H(\mathbf{k}) \;=\; \begin{pmatrix} 0 & -\gamma\,f(\mathbf{k}) \\ -\gamma\,f^*(\mathbf{k}) & 0 \end{pmatrix}. \tag{10}$$

To find the band energies $E(\mathbf{k})$, we solve the secular equation $\det\big[H(\mathbf{k})-EI\big]=0$. Explicitly:

$$\det\begin{pmatrix} -E & -\gamma\,f(\mathbf{k}) \\ -\gamma\,f^*(\mathbf{k}) & -E \end{pmatrix} \;=\; E^2 \;-\; \gamma^2\,\big|f(\mathbf{k})\big|^2 \;=\; 0 \;\Longrightarrow\; E(\mathbf{k}) \;=\; \pm\,\gamma\,\big|f(\mathbf{k})\big|.$$

Hence, there are two energy bands:

$$E_c(\mathbf{k}) \;=\; +\gamma\,\big|f(\mathbf{k})\big| \quad\text{(conduction)}, \qquad E_v(\mathbf{k}) \;=\; -\gamma\,\big|f(\mathbf{k})\big| \quad\text{(valence)}. \tag{11}$$

4.1 Explicit Form of $f(\mathbf{k})$

Using the nearest-neighbor vectors $\boldsymbol{u}_n$ from Eq. (2),

$$f(\mathbf{k}) = e^{i\mathbf{k}\cdot\boldsymbol{u}_1} + e^{i\mathbf{k}\cdot\boldsymbol{u}_2} + e^{i\mathbf{k}\cdot\boldsymbol{u}_3} \tag{12}$$

$$= e^{i\left(0\cdot k_x + a\,k_y\right)} + e^{i\left(-\frac{\sqrt{3}a}{2}\,k_x - \frac{a}{2}\,k_y\right)} + e^{i\left(\frac{\sqrt{3}a}{2}\,k_x - \frac{a}{2}\,k_y\right)} \tag{13}$$

$$= e^{i\,ak_y} + e^{-i\frac{a}{2}k_y}\left[e^{-i\frac{\sqrt{3}a}{2}k_x} + e^{i\frac{\sqrt{3}a}{2}k_x}\right] \tag{14}$$

$$= e^{i\,ak_y} + 2\,e^{-i\frac{a}{2}k_y}\cos\left(\frac{\sqrt{3}a}{2}k_x\right) \tag{15}$$

Its complex conjugate is given by:

$$f(k)^* = \left(e^{i\,ak_y} + 2\,e^{-i\frac{a}{2}k_y}\cos\left(\frac{\sqrt{3}a}{2}k_x\right)\right)^* = e^{-i\,ak_y} + 2\,e^{i\frac{a}{2}k_y}\cos\left(\frac{\sqrt{3}a}{2}k_x\right).$$

Consequently, the squared modulus is:

$$f(k)\cdot f(k)^* = \left|f(\mathbf{k})\right|^2 = \left[e^{i\,ak_y} + 2\,e^{-i\frac{a}{2}k_y}\cos\left(\frac{\sqrt{3}a}{2}k_x\right)\right]\cdot\left[e^{-i\,ak_y} + 2\,e^{i\frac{a}{2}k_y}\cos\left(\frac{\sqrt{3}a}{2}k_x\right)\right] =$$

$$= 1 + 2e^{iak_y + i\frac{a}{2}k_y}\cos\left(\frac{\sqrt{3}a}{2}k_x\right) + 2e^{-iak_y - i\frac{a}{2}k_y}\cos\left(\frac{\sqrt{3}a}{2}k_x\right) + 4\cos^2\left(\frac{\sqrt{3}a}{2}k_x\right) =$$

$$= 1 + 2e^{i\frac{3a}{2}k_y}\cos\left(\frac{\sqrt{3}a}{2}k_x\right) + 2e^{-i\frac{3a}{2}k_y}\cos\left(\frac{\sqrt{3}a}{2}k_x\right) + 4\left[1 - \sin^2\left(\frac{\sqrt{3}a}{2}k_x\right)\right] =$$

$$5 + 2\cos\left(\frac{\sqrt{3}a}{2}k_x\right)\cdot\left(e^{i\frac{3a}{2}k_y} + e^{-i\frac{3a}{2}k_y}\right) - 4\sin^2\left(\frac{\sqrt{3}a}{2}k_x\right) =$$

$$= 5 + 4\cos\left(\frac{\sqrt{3}a}{2}k_x\right)\cos\left(\frac{3a}{2}k_y\right) - 4\sin^2\left(\frac{\sqrt{3}a}{2}k_x\right)$$

We must remember that:

$$\sin\left(\frac{\alpha}{2}\right) = \pm\sqrt{\frac{1-\cos\alpha}{2}}.$$

Thus we get:

$$5 + 4\cos\left(\frac{\sqrt{3}a}{2}k_x\right)\cos\left(\frac{3a}{2}k_y\right) - 4\left(\frac{1-\cos\left(\sqrt{3}ak_x\right)}{2}\right) =$$

$$= 3 \;+\; 4\,\cos\left(\tfrac{\sqrt{3}ak_x}{2}\right)\,\cos\left(\tfrac{3ak_y}{2}\right) \;+\; 2\,\cos\left(\sqrt{3}ak_x\right).$$

Finally:

$$\left|f(\mathbf{k})\right| = \sqrt{3 \;+\; 4\,\cos\left(\tfrac{\sqrt{3}ak_x}{2}\right)\,\cos\left(\tfrac{3ak_y}{2}\right) \;+\; 2\,\cos\left(\sqrt{3}ak_x\right)}.$$

5 Derivation of the Dirac Points in Graphene

A standard approach to find the Dirac points is to seek symmetry-allowed solutions. Choosing, for example, the $k_y = 0$ line (this choice can be motivated by the high symmetry of the problem), one obtains:

$$f(k_x, 0) = 1 + 2\,\cos\left(\frac{\sqrt{3}a}{2}k_x\right) \tag{16}$$

Setting $f(k_x, 0) = 0$ yields

$$1 + \,2\,\cos\left(\frac{\sqrt{3}a}{2}k_x\right) = 0 \quad \Longrightarrow \quad \cos\left(\sqrt{3}ak_x\right) = -\frac{1}{2}.$$

Since $\cos(\theta) = -\frac{1}{2}$ for $\theta = \pm\frac{\pi}{3}$ (modulo 2π), one finds:

$$\frac{\sqrt{3}a}{2}\,k_x = \pm\frac{2\pi}{3} \quad \Longrightarrow \quad k_x = \pm\frac{4\pi}{3\sqrt{3}\,a}.$$

The two inequivalent Dirac points are then:

$$\mathbf{K} = \left(\frac{4\pi}{3\sqrt{3}\,a},\,0\right) \quad \text{and} \quad \mathbf{K}' = \left(-\frac{4\pi}{3\sqrt{3}\,a},\,0\right).$$

An alternative derivation proceeds by examining the reciprocal lattice, playing with the vectors a_1, a_2, b_1, b_2. Specifically, we would find that:

$$K = \frac{2\,\mathbf{b}_1 + \mathbf{b}_2}{3}, \quad K' = \frac{2\,\mathbf{b}_2 + \mathbf{b}_1}{3}$$

6 Dirac Points $\mathbf{K}, \mathbf{K}'$ and Linear Dispersion

6.1 Expansion of $f(\mathbf{k})$ near $\mathbf{K}$

Define a small deviation $\mathbf{q}$ from $\mathbf{K}$:

$$\mathbf{k} = \mathbf{K} + \mathbf{q}, \quad |\mathbf{q}| \ll |\mathbf{K}| = \frac{4\pi}{3a\sqrt{3}}.$$

We Taylor-expand $f(\mathbf{k})$ to first order in $\mathbf{q}$. Because $f(\mathbf{K}) = 0$, only the linear terms contribute:

$$f(\mathbf{K} + \mathbf{q}) \approx q_x\,\frac{\partial f}{\partial k_x}\Big|_{\mathbf{K}} + q_y\,\frac{\partial f}{\partial k_y}\Big|_{\mathbf{K}}. \tag{17}$$

From Eq. (15), that we report here for simplicity:

$$f(k) = e^{i\,ak_y} + 2\,e^{-i\frac{a}{2}k_y}\cos\left(\frac{\sqrt{3}a}{2}k_x\right)$$

One computes:

$$\frac{\partial f}{\partial k_x} = -\sqrt{3}a\, e^{i\,\frac{ak_y}{2}}\, \sin\!\Big(\frac{\sqrt{3}ak_x}{2}\Big) \quad \text{and} \quad \frac{\partial f}{\partial k_y} = \, i\, a\, e^{-\,i\,ak_y} - i\, a\, e^{i\,\frac{ak_y}{2}}\, \cos\!\Big(\tfrac{\sqrt{3}ak_x}{2}\Big).$$

Evaluating these at $\mathbf{k} = \mathbf{K} = \big(\frac{4\pi}{3a\sqrt{3}},\, 0\big)$:

$$\begin{cases} \frac{\partial f}{\partial k_x}\Big|_{\mathbf{K}} = -\sqrt{3}a\, \sin\!\Big(\frac{\sqrt{3}a\frac{4\pi}{3a\sqrt{3}}}{2}\Big) = -\sqrt{3}a\, \sin\!\Big(\frac{2\pi}{3}\Big) = -\frac{3}{2}a \\ \frac{\partial f}{\partial k_y}\Big|_{\mathbf{K}} = \, i\, a - i\, a \cos\!\Big(\frac{\sqrt{3}a\frac{4\pi}{3a\sqrt{3}}}{2}\Big) = ia\left[1 - \cos\!\Big(\frac{2\pi}{3}\Big)\right] = \frac{3}{2}ia \end{cases}$$

Therefore, to linear order in $\mathbf{q} = (q_x, q_y)$,

$$f(\mathbf{K}+\mathbf{q}) \approx -\,\frac{3a}{2}\, q_x \;+\; i\,\frac{3a}{2}\, q_y \;=\; \frac{3a}{2}\,(-q_x + i\, q_y).$$

We can introduce the Fermi velocity

$$v_F \;=\; \frac{3\,a\,\gamma}{2\hbar} \quad \Longrightarrow \quad \gamma\,\frac{3a}{2} = \hbar\, v_F.$$

Thus,

$$\gamma\, f(\mathbf{K}+\mathbf{q}) \approx \;\hbar\, v_F\,\big(-q_x + i\, q_y\big). \tag{18}$$

6.2 Dirac-Weyl Hamiltonian

First of all, let's re-write this equation:

$$\begin{pmatrix} 0 & -\gamma\, f(\mathbf{k}) \\ -\gamma\, f^*(\mathbf{k}) & 0 \end{pmatrix} \begin{pmatrix} \psi_A(\mathbf{k}) \\ \psi_B(\mathbf{k}) \end{pmatrix} \;=\; E(\mathbf{k}) \begin{pmatrix} \psi_A(\mathbf{k}) \\ \psi_B(\mathbf{k}) \end{pmatrix} =$$

$$= \begin{pmatrix} 0 & -\gamma\, f(\mathbf{k}) \\ -\gamma\, f^*(\mathbf{k}) & 0 \end{pmatrix} \psi_A(\mathbf{k}) \begin{pmatrix} 1 \\ \frac{\psi_B(\mathbf{k})}{\psi_A(\mathbf{k})} \end{pmatrix} \;=\; E(\mathbf{k})\psi_A(\mathbf{k}) \begin{pmatrix} 1 \\ \frac{\psi_B(\mathbf{k})}{\psi_A(\mathbf{k})} \end{pmatrix}$$

But we found the following:

$$\begin{cases} E = \pm\gamma|f(k)| \\ -\gamma\psi_B f = E\psi_A \\ -\gamma\psi_A f^* = E\psi_B \end{cases}$$

Thus, we can express $\frac{\psi_B}{\psi_A}$ as, e.g.:

$$\frac{\psi_B}{\psi_A} = -\frac{\gamma f^*}{E} = \mp\frac{f^*}{|f|}$$

So that the wavefunction of the system is:

$$\psi = \psi_A \begin{bmatrix} 1 \\ \mp\frac{f^*}{|f|} \end{bmatrix}$$

Now, we can easily normalize as:

$$\langle\psi|\psi\rangle = \psi_A^* \begin{bmatrix} 1 & \mp\frac{f}{|f|} \end{bmatrix} \psi_A \begin{bmatrix} 1 \\ \mp\frac{f^*}{|f|} \end{bmatrix} = |\psi_A|^2 \left(1 + \frac{|f|^2}{|f|^2}\right) = 2|\psi_A|^2 = 1 \Rightarrow$$

$$\Rightarrow \psi_A = \frac{1}{\sqrt{2}}$$

Substituting Eq. (18) into the 2×2 Hamiltonian of Eq. (10), and writing $\psi(\mathbf{q}) = \big(\psi_A, \psi_B\big)^T$, we obtain in the basis $\{A, B\}$:

$$H(\mathbf{K}+\mathbf{q}) \approx \begin{pmatrix} 0 & -\gamma\, f(\mathbf{K}+\mathbf{q}) \\ -\gamma\, f^*(\mathbf{K}+\mathbf{q}) & 0 \end{pmatrix} = \begin{pmatrix} 0 & \hbar\, v_F \left(q_x + i\, q_y\right) \\ \hbar\, v_F \left(q_x - i\, q_y\right) & 0 \end{pmatrix}.$$

Defining the Pauli matrices $\sigma_x = \begin{pmatrix} 0 & 1 \\ 1 & 0 \end{pmatrix}$, $\sigma_y = \begin{pmatrix} 0 & -i \\ i & 0 \end{pmatrix}$, and the momentum operator $\mathbf{p} = \hbar\, \mathbf{q}$, this becomes:

$$H_{\text{Dirac}} \;=\; \hbar\, v_F \left(\sigma_x\, q_x + \sigma_y\, q_y\right) \;=\; v_F\, \boldsymbol{\sigma} \cdot \mathbf{p}. \tag{19}$$

Equation (19) is the massless Dirac (Weyl) Hamiltonian in two dimensions, describing quasi-particles of graphene near the Dirac point K.

6.3 Linear Energy Spectrum (Dirac Cones)

The eigenvalues of H_{Dirac} follow immediately:

$$E(\mathbf{q}) = \pm\, \hbar\, v_F \sqrt{q_x^2 + q_y^2} \;=\; \pm\, \hbar\, v_F\, |\mathbf{q}|.$$

This describes two *Dirac cones*:

$$E_c(\mathbf{q}) = +\, \hbar\, v_F\, |\mathbf{q}|, \qquad E_v(\mathbf{q}) = -\, \hbar\, v_F\, |\mathbf{q}|.$$

Hence, near the K point, graphene's dispersion is strictly linear in $|\mathbf{q}|$. The same result holds near $\mathbf{K}'$, since $f(\mathbf{K}' + \mathbf{q}) \approx -\, \hbar v_F\, (-q_x + i\, q_y)$, leading to an identical pair of Dirac cones.

6.4 Eigenstates of the Dirac Hamiltonian

For a given small momentum $\mathbf{q} = (q_x, q_y)$, the Hamiltonian (19) has eigenvectors (normalized two-component spinors)

$$\psi_\pm(\mathbf{q}) \;=\; \frac{1}{\sqrt{2}} \begin{pmatrix} 1 \\ \pm e^{i\theta_{\mathbf{q}}} \end{pmatrix}, \quad \theta_{\mathbf{q}} = \arg(q_x + i\, q_y), \quad E_\pm(\mathbf{q}) = \pm\hbar\, v_F\, |\mathbf{q}|.$$

Here the two components correspond to amplitudes on sublattices A and B. We call this two-component object a *pseudospinor*. Its "spin" direction in the (σ_x, σ_y) space is locked to the momentum direction $\mathbf{q}$.

The above results are obtained near the $\mathbf{K}$ point, because there we have already demonstrated that $f(\mathbf{K}+\mathbf{q}) \approx -\frac{3a}{2}(q_x + i\,q_y)$, thus:

$$\psi = \frac{1}{\sqrt{2}}\begin{bmatrix} 1 \\ \mp\frac{f^*}{|f|} \end{bmatrix} = \frac{1}{\sqrt{2}}\begin{bmatrix} 1 \\ \mp\frac{-q_x - i\,q_y}{|-q_x + i\,q_y|} \end{bmatrix} = \frac{1}{\sqrt{2}}\begin{bmatrix} 1 \\ \pm\frac{q_x + i\,q_y}{|q_x + i\,q_y|} \end{bmatrix}$$

This is because the sign inside the modulus can be changed. Moreover, it is now convenient to express the spinor wavevector as:

$$\mathbf{q} = q_x + iq_y = |q_x + iq_y|e^{i\theta_q}$$

From which:

$$\psi = \frac{1}{\sqrt{2}}\begin{bmatrix} 1 \\ \pm e^{i\theta_q} \end{bmatrix}$$

7 Graphene's High Carrier Mobility: Mechanisms

7.1 Defect-Free Crystal Structure

- **In-plane covalent bonds:** Each carbon atom is sp^2-hybridized, forming three strong σ-bonds with its nearest neighbors. These σ-bonds have an energy cost of approximately 4.9 eV to break, making the lattice exceptionally robust against point defects and bond rearrangements.

- **Substrate effects:** When graphene is encapsulated in hexagonal boron nitride (hBN), one can achieve room-temperature mobilities in excess of $10^5\,\mathrm{cm}^2/\mathrm{V\,s}$. On SiO_2, however, random charged impurities and surface phonons reduce the mobility to $\sim 5 \times 10^3\,\mathrm{cm}^2/\mathrm{V\,s}$. The atomically smooth, charge-neutral hBN substrate minimizes Coulomb scattering and remote phonon scattering, preserving graphene's intrinsic transport properties.

7.2 Backscattering Suppression via Pseudospinor Wavefunction

1. Spinor Wavefunction near a Dirac Point Near a Dirac point ($\mathbf{K}$ or $\mathbf{K}'$), low-energy quasiparticles are described by a two-component spinor ("pseudospin") arising from the two sublattices A and B. In polar coordinates $\mathbf{q} = (q_x, q_y)$, define

$$\theta_{\mathbf{q}} = \arctan\!\left(\tfrac{q_y}{q_x}\right), \qquad |\mathbf{q}| \ll |\mathbf{K}|.$$

The normalized eigenstate of the massless Dirac Hamiltonian (for the conduction-band branch, $E > 0$) is

$$\psi_+(\mathbf{q}) \;=\; \frac{1}{\sqrt{2}}\begin{pmatrix} 1 \\ e^{\,i\theta_{\mathbf{q}}} \end{pmatrix}, \quad E_+(\mathbf{q}) = +\,\hbar v_F\,|\mathbf{q}|.$$

Similarly, for the valence band ($E < 0$),

$$\psi_-(\mathbf{q}) \;=\; \frac{1}{\sqrt{2}}\begin{pmatrix} 1 \\ -\,e^{\,i\theta_{\mathbf{q}}} \end{pmatrix}, \quad E_-(\mathbf{q}) = -\,\hbar v_F\,|\mathbf{q}|.$$

In either case, the pseudospinor's relative phase $e^{i\theta_{\mathbf{q}}}$ encodes the direction of $\mathbf{q}$ in momentum space.

2. Scattering Matrix Element for an Intervalley-Preserving Potential Consider a smooth, scalar impurity potential $U(\mathbf{r})$ that varies on length scales $\gg a$. Such a potential does *not* couple sublattices A and B differently and preserves valley index. In Born approximation, the scattering amplitude from initial state $\psi_+(\mathbf{q})$ to final state $\psi_+(\mathbf{q}')$ is

$$\mathcal{M}(\mathbf{q} \to \mathbf{q}') \;\propto\; \langle \psi_+(\mathbf{q}') \,|\, U \,|\, \psi_+(\mathbf{q}) \rangle \;=\; \int d^2r \; \psi_+^\dagger(\mathbf{q}', \mathbf{r}) \; U(\mathbf{r}) \; \psi_+(\mathbf{q}, \mathbf{r}).$$

Since $U(\mathbf{r})$ is scalar and slowly varying on the scale of the lattice, one can approximate

$$\psi_+(\mathbf{q}, \mathbf{r}) \approx \psi_+(\mathbf{q}) \, e^{i\mathbf{q}\cdot\mathbf{r}}, \qquad \psi_+(\mathbf{q}', \mathbf{r}) \approx \psi_+(\mathbf{q}') \, e^{i\mathbf{q}'\cdot\mathbf{r}}.$$

Thus,

$$\mathcal{M}(\mathbf{q} \to \mathbf{q}') \;\propto\; \big[\psi_+(\mathbf{q}')\big]^\dagger \, \psi_+(\mathbf{q}) \;\times\; \tilde{U}(\mathbf{q}' - \mathbf{q}),$$

where $\tilde{U}(\mathbf{k})$ is the Fourier transform of $U(\mathbf{r})$. The *pseudospin overlap* factor is

$$\big[\psi_+(\mathbf{q}')\big]^\dagger \psi_+(\mathbf{q}) \;=\; \frac{1}{2} \begin{pmatrix} 1 & e^{-i\theta_{\mathbf{q}'}} \end{pmatrix} \begin{pmatrix} 1 \\ e^{i\theta_{\mathbf{q}}} \end{pmatrix} \;=\; \frac{1}{2} \Big[1 \;+\; e^{i(\theta_{\mathbf{q}} - \theta_{\mathbf{q}'})} \Big].$$

Define the scattering angle $\Delta\theta = \theta_{\mathbf{q}'} - \theta_{\mathbf{q}}$. Then

$$\big[\psi_+(\mathbf{q}')\big]^\dagger \psi_+(\mathbf{q}) \;=\; \frac{1}{2} \big[1 + e^{-i\,\Delta\theta} \big] \;=\; e^{-i\,\frac{\Delta\theta}{2}} \; \cos\!\big(\tfrac{\Delta\theta}{2}\big).$$

The magnitude of the overlap is $\big|\cos(\Delta\theta/2)\big|$. In particular, for *exact backscattering*, $\mathbf{q}' = -\,\mathbf{q}$, one has $\Delta\theta = \pi$. Therefore,

$$\big|\big[\psi_+(-\mathbf{q})\big]^\dagger \psi_+(\mathbf{q})\big| \;=\; \big|\cos\!\big(\pi/2\big)\big| \;=\; 0,$$

so the scattering matrix element $\mathcal{M}(\mathbf{q} \to -\mathbf{q})$ vanishes identically.

3. Physical Consequences of Backscattering Suppression

- **Suppressed large-angle scattering:** In conventional (parabolic) 2D electron gases, large-angle (back) scattering contributes strongly to momentum relaxation and limits mobility. In graphene, for scalar, smooth impurities, the *pseudospin-orthogonality* forces the backscattering amplitude to zero, so large-angle scattering is highly suppressed.

- **Ballistic transport:** With backscattering eliminated, mean free paths ℓ can exceed several microns at room temperature in high-quality, hBN-encapsulated graphene. As a result, ballistic-dominated transport (where $\ell \gg L$, the device length) can be observed even at 300 K.

- **Quantum Hall effect at high T:** Because carrier scattering is weak, Landau-quantized cyclotron orbits remain well-defined up to elevated temperatures ($\gtrsim 300\,\mathrm{K}$), enabling observation of half-integer quantum Hall plateaus at 300 K under high magnetic fields ($B > 20\,\mathrm{T}$).

7.3 Illustrative Comparison with Silicon

Property	Graphene (300 K)	Si (300 K)
Phonon-limited mobility	$10^5 \, \frac{\mathrm{cm}^2}{\mathrm{V\,s}}$	$1.5 \times 10^3 \, \frac{\mathrm{cm}^2}{\mathrm{V\,s}}$
Backscattering rate	0 (for scalar disorder)	$\propto \left\lvert \langle u_{\mathbf{k}'} \lvert u_{\mathbf{k}} \rangle \right\rvert^2 \neq 0$
Defect sensitivity	Low (robust sp^2 network)	High (bulk, many trap states)

7.4 Applications and Limitations

Strengths

- **Terahertz-frequency transistors:** High mobility and Fermi velocity ($v_F \approx 10^6$ m/s) enable cutoff frequencies (f_T) in the terahertz regime for short-channel GFETs.
- **Quantum metrology:** The suppressed scattering and robust Landau quantization allow graphene to serve as a quantum resistance standard via the half-integer quantum Hall effect, even without cryogenic cooling.

Weaknesses

- **No bandgap:** The absence of a bandgap ($E_g = 0$) prevents full turn-off in field-effect transistors, limiting digital logic applications.
- **Substrate dependence:** On SiO_2 or other rough/charged substrates, remote phonon scattering and charged-impurity scattering degrade mobility by one to two orders of magnitude. High mobilities require either hBN encapsulation or suspension, which increases fabrication complexity.

8 Scattering Matrix Element in Graphene

Consider a (scalar) impurity or disorder potential $V(\mathbf{r}) \equiv H_{\mathrm{scatt}}(\mathbf{r})$ that is diagonal in the sublattice basis (no sublattice-mixing). In second quantization, for Bloch-spinors $\Psi_{\mathbf{k}}(\mathbf{r})\, e^{i\,\mathbf{k}\cdot\mathbf{r}}$, the matrix element between an initial Bloch state $\langle \mathbf{k}_i, r|$ and a final state $|\mathbf{k}_f, r\rangle$ is

$$M(\mathbf{k}_f, \mathbf{k}_i) \;=\; \left\langle \mathbf{k}_f \right| V(\mathbf{r}) \left| \mathbf{k}_i \right\rangle \;=\; \int_{\mathrm{cell}} d^2r\, \Psi^\dagger_{\mathbf{k}_f}(\mathbf{r})\, e^{-i\,\mathbf{k}_f\cdot\mathbf{r}}\, V(\mathbf{r})\, \Psi_{\mathbf{k}_i}(\mathbf{r})\, e^{i\,\mathbf{k}_i\cdot\mathbf{r}}.$$

Since $V(\mathbf{r})$ varies slowly (or for a point-like impurity, $V(\mathbf{r}) = V_0\,\delta(\mathbf{r})$), one can factor out the rapid Bloch-phase and focus on the *spinor* overlap. For simplicity, assume a localized (short-range) potential $V_0\,\delta(\mathbf{r})$. Then

$$M(\mathbf{k}_f, \mathbf{k}_i) \;=\; V_0\, \Psi^\dagger_{\mathbf{k}_f}(\mathbf{r}=0)\, \Psi_{\mathbf{k}_i}(\mathbf{r}=0) \;\times\; \delta_{\mathbf{k}_f,\mathbf{k}_i}.$$

More generally, for finite-range disorder, one obtains

$$M(\mathbf{k}_f, \mathbf{k}_i) \;=\; \tilde{V}(\mathbf{k}_f - \mathbf{k}_i) \;\underbrace{\Psi^\dagger_{\mathbf{k}_f}\,\Psi_{\mathbf{k}_i}}_{\mathcal{S}(\mathbf{k}_f, \mathbf{k}_i)},$$

where $\tilde{V}(\mathbf{q})$ is the Fourier transform of $V(\mathbf{r})$, and $\mathcal{S}(\mathbf{k}_f, \mathbf{k}_i)$ is the spinor overlap. Using our two-component eigenstates

$$\Psi_+(\mathbf{k}) \;=\; \frac{1}{\sqrt{2}}\begin{pmatrix} 1 \\ e^{i\,\theta_{\mathbf{k}}} \end{pmatrix}, \quad \Psi^\dagger_+(\mathbf{k}) \;=\; \frac{1}{\sqrt{2}}\begin{pmatrix} 1 & e^{-i\,\theta_{\mathbf{k}}} \end{pmatrix},$$

we find

$$\begin{aligned} \mathcal{S}(\mathbf{k}_f, \mathbf{k}_i) = \;\Psi^\dagger_+(\mathbf{k}_f)\,\Psi_+(\mathbf{k}_i) \;&=\; \frac{1}{2}\begin{pmatrix} 1 & e^{-i\,\theta_f} \end{pmatrix}\begin{pmatrix} 1 \\ e^{i\,\theta_i} \end{pmatrix} \\ &=\; \frac{1}{2}\Big[1 \;+\; e^{i\,(\theta_i - \theta_f)}\Big]. \end{aligned}$$

Hence the total scattering matrix element from $\mathbf{k}_i$ to $\mathbf{k}_f$ in the conduction band is

$$\boxed{\big\langle \mathbf{k}_f \big| H_{\text{scatt}} \big| \mathbf{k}_i \big\rangle \;=\; \tilde{V}\big(\mathbf{k}_f - \mathbf{k}_i\big) \;\underbrace{\frac{1 + e^{\,i(\theta_i - \theta_f)}}{2}}_{\mathcal{S}(\mathbf{k}_f, \mathbf{k}_i)}\,.}$$

Likewise, one obtains the same overlap factor for the valence band (up to a sign) if one uses Ψ_- spinors.

8.1 Important Consequence: Suppression of Backscattering

The key factor is

$$\mathcal{S}(\mathbf{k}_f, \mathbf{k}_i) \;=\; \frac{1}{2}\big[\,1 + e^{\,i(\theta_i - \theta_f)}\big].$$

In particular, "perfect backscattering" corresponds to $\mathbf{k}_f = -\,\mathbf{k}_i$, so that $\theta_f = \theta_i + \pi$. Then

$$\theta_i - \theta_f \;=\; \theta_i - (\theta_i + \pi) \;=\; -\pi, \qquad e^{\,i(\theta_i - \theta_f)} \;=\; e^{-\,i\pi} \;=\; -1.$$

Therefore

$$\mathcal{S}(\,-\mathbf{k}_i, \mathbf{k}_i) \;=\; \frac{1}{2}\big[\,1 + (-1)\big] \;=\; 0.$$

Consequently, for any short-range (or even long-range but sublattice-diagonal) potential, the amplitude to scatter exactly from $\mathbf{k}_i$ to $-\mathbf{k}_i$ vanishes identically. In other words, *backscattering (angle* 180°*) is forbidden* in pristine graphene. This is often referred to as the "π Berry phase" protection or the pseudospin-chirality suppression of backscattering.

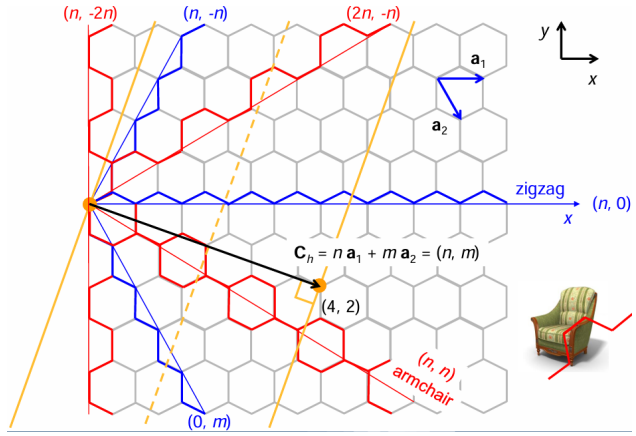

Answer for the scattering matrix element and its consequence:

$$\boxed{\langle\, \mathbf{k}_f \,|H_{\text{scatt}}|\, \mathbf{k}_i \,\rangle \;=\; \tilde{V}\big(\mathbf{k}_f - \mathbf{k}_i\big)\,\frac{1+e^{\,i(\theta_i-\theta_f)}}{2},} \quad \mathcal{S}(\mathbf{k}_f,\mathbf{k}_i) \;=\; \tfrac{1}{2}\big[\,1+e^{\,i(\theta_i-\theta_f)}\big].$$

This implies that for $\mathbf{k}_f = -\,\mathbf{k}_i$ (backscattering),

$$\mathcal{S}(-\mathbf{k}_i,\mathbf{k}_i) = 0,$$

so *backscattering is suppressed*. The physical consequence is that carriers in graphene cannot be scattered by 180°, which yields exceptionally high mobility and quasi-ballistic transport at room temperature.

9 Carbon Nanotube Chiral Vector and Metallicity Condition

9.1 Definition of the Chiral Vector

To form a single-walled carbon nanotube (CNT), one can conceptually "roll up" a graphene sheet so that two lattice points separated by a vector

$$\mathbf{C}_h \;=\; n\,\mathbf{a}_1 \;+\; m\,\mathbf{a}_2$$

become identified (where $n, m \in \mathbb{Z}$ and $n \geq m \geq 0$ without loss of generality). The integers (n, m) are called the *chiral indices*, and $\mathbf{C}_h$ is referred to as the *chiral* or *wrapping* vector. By definition, $|\mathbf{C}_h|$ becomes the tube's circumference. The direction of $\mathbf{C}_h$ relative to $\mathbf{a}_1, \mathbf{a}_2$ determines the tube's *chirality*:

- If $m = 0$, one obtains a *zigzag* tube.
- If $m = n$, one obtains an *armchair* tube.
- Otherwise ($n > m > 0$), one obtains a *chiral* tube.

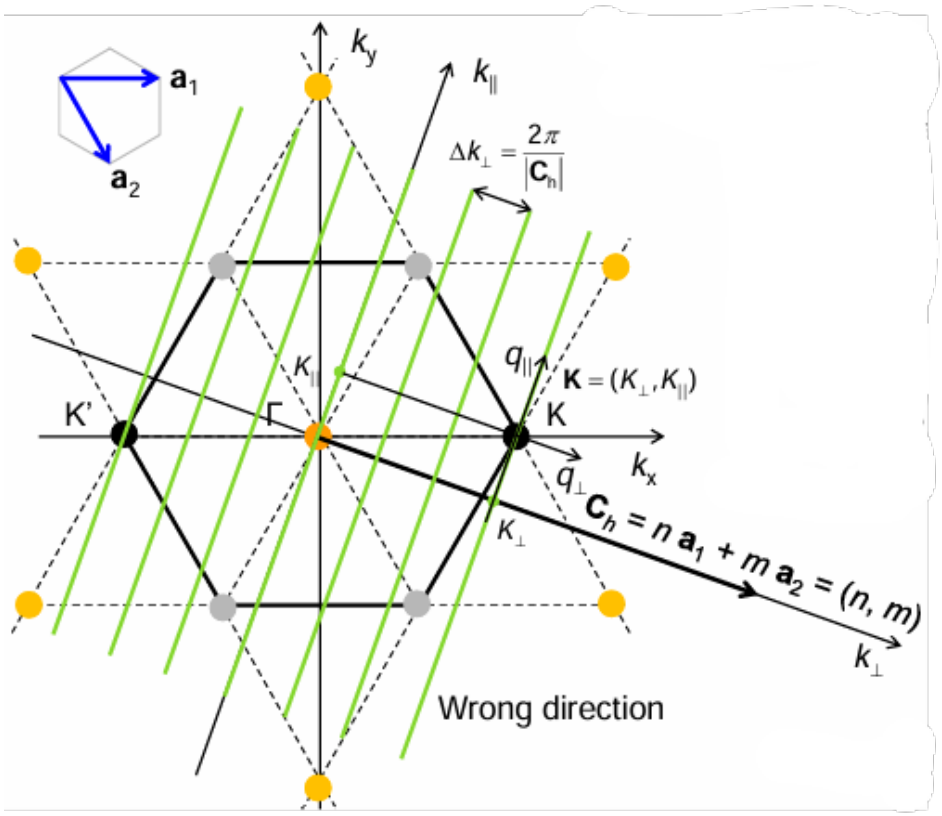

9.2 Quantization of Wavevectors on a CNT

When graphene is rolled so that $\mathbf{C}_h$ is made periodic, Bloch wavevectors $\mathbf{k}$ in the original 2D Brillouin zone must satisfy the periodic-boundary condition

$$\mathbf{k} \cdot \mathbf{C}_h \;=\; 2\pi\,\ell, \qquad \ell \in \mathbb{Z},$$

because the wavefunction must be single-valued after going once around the circumference. Decomposing $\mathbf{k}$ into a component $\mathbf{k}_\perp$ around the circumference and a component $\mathbf{k}_\parallel$ along the tube axis:

$$\mathbf{k} = \mathbf{k}_\perp + \mathbf{k}_\parallel,$$

one sees that $\mathbf{k}_\perp \cdot \mathbf{C}_h = 2\pi\,\ell$ fixes $\mathbf{k}_\perp$ to a discrete set of values. In other words, in the 2D Brillouin zone of graphene, only those lines for which $\mathbf{k}_\perp$ satisfies the above condition are allowed. Each such line is parallel to the tube axis.

9.3 Condition for a CNT to Be Metallic

Graphene's conduction and valence bands meet at the Dirac points K and K'. A CNT will be *metallic* if and only if one of its allowed quantization lines passes exactly through a Dirac point. Equivalently, there must exist integers ℓ and choice of K (or K') such that:

$$K \cdot \mathbf{C}_h \;=\; 2\pi\,\ell, \quad \text{or} \quad K' \cdot \mathbf{C}_h \;=\; 2\pi\,\ell.$$

We pick $K = \left(\frac{4\pi}{3a\sqrt{3}}, 0\right)$ for concreteness. Then:

$$K \cdot \mathbf{C}_h \;=\; K \cdot \big(n\,\mathbf{a}_1 + m\,\mathbf{a}_2\big) \;=\; n\,\big(\mathbf{a}_1 \cdot K\big) \;+\; m\,\big(\mathbf{a}_2 \cdot K\big).$$

Since $\mathbf{a}_i \cdot \mathbf{b}_j = 2\pi\,\delta_{ij}$, and $K = \frac{2\,\mathbf{b}_1 + \mathbf{b}_2}{3}$, one computes:

$$\mathbf{a}_1 \cdot K \;=\; \mathbf{a}_1 \cdot \left(\frac{2\,\mathbf{b}_1 + \mathbf{b}_2}{3}\right) \;=\; \tfrac{1}{3}\big(2\,\underbrace{\mathbf{a}_1 \cdot \mathbf{b}_1}_{2\pi} + \underbrace{\mathbf{a}_1 \cdot \mathbf{b}_2}_{0}\big) \;=\; \frac{2\,(2\pi)}{3} \;=\; \frac{4\pi}{3},$$

$$\mathbf{a}_2 \cdot K \;=\; \mathbf{a}_2 \cdot \left(\frac{2\,\mathbf{b}_1 + \mathbf{b}_2}{3}\right) \;=\; \tfrac{1}{3}\big(2\,\underbrace{\mathbf{a}_2 \cdot \mathbf{b}_1}_{0} + \underbrace{\mathbf{a}_2 \cdot \mathbf{b}_2}_{2\pi}\big) \;=\; \frac{2\pi}{3}.$$

Therefore

$$K \cdot \mathbf{C}_h \;=\; n\left(\frac{4\pi}{3}\right) \;+\; m\left(\frac{2\pi}{3}\right) \;=\; \frac{2\pi}{3}\,\big(2n + m\big).$$

Hence the condition $K \cdot C_h = 2\pi\,\ell$ becomes

$$\frac{2\pi}{3}\,(2n + m) \;=\; 2\pi\,\ell, \quad \ell \in \mathbb{Z},$$

which is equivalent to

$$2n + m \;=\; 3\,\ell \;\iff\; 2n + m \equiv 0 \pmod 3.$$

Similarly, demanding $K' \cdot C_h = 2\pi\,\ell'$ leads to

$$n + 2m \equiv 0 \pmod 3.$$

One can show these two conditions are equivalent (modulo relabeling $n \leftrightarrow m$). Equivalently, both can be summarized as

$$n - m \;\equiv\; 0 \pmod 3.$$

Indeed, $2n + m \equiv 0 \pmod 3$ implies $2n + m \equiv 0 \implies 2n + m \equiv 2(n - m) \pmod 3$, so $n - m \equiv 0 \pmod 3$. Likewise if $n - m \equiv 0$ then $2n + m = 3n - (n - m) \equiv 0$.

Metallic-CNT condition:

$$\boxed{n - m \;\equiv\; 0 \pmod 3.}$$

If $n - m$ is a multiple of 3, then one of the allowed quantization lines passes exactly through a graphene Dirac point and the CNT is *metallic*. Otherwise, it is semiconducting.

9.4 Special Cases

- *Armchair CNTs:* (n, n). Here $n - n = 0$, which is a multiple of 3 for any integer n. Hence *all armchair* tubes are metallic.
- *Zigzag CNTs:* $(n, 0)$. Here the condition becomes $n - 0 \equiv 0 \pmod 3$. Thus a zigzag tube is metallic exactly if n is divisible by 3; otherwise it is semiconducting.
- *Chiral CNTs:* (n, m) with $n > m > 0$. They are metallic if $n - m$ is a multiple of 3, semiconducting otherwise.

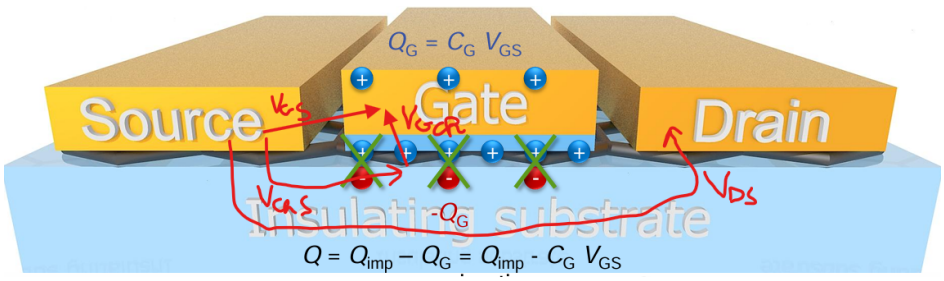

10 Graphen Field-Effect Transistor (GFET)

A **Graphene Field-Effect Transistor (GFET)** is a three-terminal device in which a single-atom-thick sheet of graphene serves as the conducting channel between source and drain. The voltage applied to the gate electrode modulates the carrier density—and hence the conductivity—of the graphene channel. Key features include:

- **Channel Material:** Single-layer graphene, a two-dimensional sheet of carbon atoms in a honeycomb lattice.
- **Ambipolar Conduction:** Graphene's zero bandgap and symmetric electron/hole dispersion about the Dirac point allow conduction by either electrons or holes, depending on the gate-induced Fermi level.
- **Quantum Capacitance:** Because graphene has a low density of states near the Dirac point, the effective gate capacitance is a series combination of the geometric (oxide) capacitance and graphene's quantum capacitance.
- **Transfer and Output Characteristics:** By sweeping the gate–source voltage V_{GS} (for fixed drain–source voltage V_{DS}), one obtains the *transfer characteristic* (I_D vs. V_{GS}); by sweeping V_{DS} (for fixed V_{GS}), one obtains the *output characteristic* (I_D vs. V_{DS}).

11 Graphene Resistor

A *graphene resistor* consists of:

- A single-layer graphene sheet (channel) of width W and length L.
- Two metallic contacts, conventionally labeled *source* and *drain*.
- An insulating substrate (e.g., SiO_2 or, for high-performance devices, hexagonal boron nitride (hBN)).

Unlike a transistor, there is no gate electrode in this simple resistor. In practice, however, the total resistance R_{total} between source and drain includes several parasitic contributions in series:

$$R_{\text{total}} = R_{\text{source lead}} + R_{\text{contact, source}} + R_{\text{graphene, channel}} + R_{\text{contact, drain}} + R_{\text{drain lead}}.$$

Here:

- R_{contact} arises from the metal–graphene interface (no Schottky barrier, but a finite contact resistance).
- R_{graphene} is the intrinsic sheet resistance of the graphene channel between the two contacts.
- R_{lead} accounts for the series resistance in the metallic leads (often negligible compared to R_{contact}).

For clarity, we will henceforth neglect all parasitic resistances except R_{graphene}.

12 Density of States (DOS) in Graphene

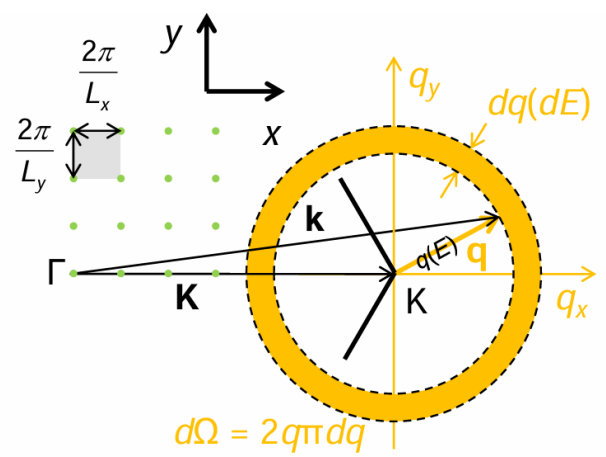

12.1 Definition

The density of states $g(E)$ is defined as the number of available electronic states per unit energy and per unit area:

$$g(E) \;=\; \frac{1}{A}\,\frac{dN}{dE},$$

where dN is the number of states in the energy interval $[E,\, E + dE]$ and A is the total area of the graphene sheet.

12.2 Linear Dispersion Near the Dirac Points

Close to each Dirac point ($\mathbf{K}$ or $\mathbf{K}'$), the low-energy dispersion of graphene is

$$E \;=\; \pm\,\hbar\, v_F\, |\mathbf{q}|,$$

where:

- v_F is the Fermi velocity in graphene,
- $\mathbf{q} = \mathbf{k} - \mathbf{K}$ is the momentum measured from a Dirac point,
- the "$\pm$" sign corresponds to conduction ($+$) and valence ($-$) bands.

12.3 Counting States in q-Space

In two dimensions, each allowed $\mathbf{q}$-state occupies an area $(2\pi)^2/A$ in the Brillouin zone. Including spin and valley degeneracies (a total factor of 4), the number of states between radius $|\mathbf{q}|$ and $|\mathbf{q}| + d|\mathbf{q}|$ is

$$dN = \underbrace{\frac{4\,A}{(2\pi)^2}}_{\substack{\text{(density of}\\ \text{states in } \mathbf{q}\text{-space)}}} \times \underbrace{2\pi\,|\mathbf{q}|\,d|\mathbf{q}|}_{\substack{\text{area of}\\ \text{annulus in } \mathbf{q}\text{-space}}},$$

$$\Longrightarrow \quad dN = \frac{4\,A}{(2\pi)^2}\,2\pi\,|\mathbf{q}|\,d|\mathbf{q}| = \frac{2\,A}{\pi}\,|\mathbf{q}|\,d|\mathbf{q}|.$$

12.4 Relating $|\mathbf{q}|$ to Energy E

Since $E = \hbar\,v_F\,|\mathbf{q}|$, we have

$$|\mathbf{q}| = \frac{|E|}{\hbar\,v_F}, \qquad d|\mathbf{q}| = \frac{dE}{\hbar\,v_F}.$$

Substituting into dN:

$$dN = \frac{2\,A}{\pi}\,|\mathbf{q}|\,d|\mathbf{q}| = \frac{2\,A}{\pi}\,\frac{|E|}{\hbar\,v_F}\,\frac{dE}{\hbar\,v_F} = \frac{2\,A}{\pi\,(\hbar\,v_F)^2}\,|E|\,dE.$$

12.5 Density of States $g(E)$

By definition,

$$g(E) = \frac{1}{A}\,\frac{dN}{dE} = \frac{1}{A}\left(\frac{2\,A}{\pi\,(\hbar\,v_F)^2}\,|E|\right) = \frac{2\,|E|}{\pi\,(\hbar\,v_F)^2}.$$

Hence, the final expression for the DOS in monolayer graphene is

$$\boxed{g(E) = \frac{2\,|E|}{\pi\,\left(\hbar\,v_F\right)^2} \quad \left[\text{states}/(\text{eV}\cdot\text{cm}^2)\right].}$$

12.6 Key Features of Graphene's DOS

- **Linear dependence on $|E|$:** $g(E) \propto |E|$, in contrast to the constant DOS of a parabolic 2D band where $g_{2\text{D}}(E) = m^*/(\pi\,\hbar^2)$.
- **Vanishing DOS at the Dirac point:** $g(0) = 0$. This implies that, in undoped graphene at $E_F = 0$, there are no available states at exactly zero energy—electron-hole puddles or thermal excitations must supply carriers for conduction.
- **Implications:**
  - Low DOS near E_F leads to high contact resistance when injecting carriers from a metal.
  - Large gate voltages are required to shift E_F appreciably away from the Dirac point in order to access regions of higher DOS (and hence higher conductivity).

12.7 Transport at Zero Kelvin

At $T = 0\,\mathrm{K}$, the Fermi level E_F in pristine, undoped graphene sits exactly at the Dirac point. The density of states (DOS) at E_F is zero; naive expectation suggests zero conductivity. However, two phenomena ensure a finite conductivity even at zero temperature:

1. **Electron–Hole Puddles:** Real graphene on a substrate is never perfectly homogeneous. Local variations (due to ripples, charged impurities, or substrate inhomogeneity) shift the Dirac point up or down in different regions. As a result, tiny electron-rich and hole-rich puddles form, providing a finite carrier density at $E_F = 0$.

2. **Finite Bias Window:** When a small drain–source voltage V_{DS} is applied, the quasi-Fermi levels in source and drain split by eV_{DS}. Carriers can occupy states slightly above or below the Dirac point within that window. Nonetheless, even if $V_{DS} \to 0$, puddles guarantee carriers at the Dirac point.

Thus, at $T = 0\,\mathrm{K}$, although the DOS at the ideal Dirac point is zero, puddles ensure a nonzero minimum conductivity.

12.8 Transport at Finite Temperature

At finite temperature ($T > 0\,\mathrm{K}$), thermal excitations promote electrons from the valence band into the conduction band. Even in the absence of puddles, the intrinsic carrier density is given by

$$n_{\mathrm{th}}(T) \;=\; \int_0^\infty \frac{2E}{\pi(\hbar v_F)^2} \frac{1}{1 + e^{E/(k_B T)}}\, dE,$$

where $v_F \approx 10^6\,\mathrm{m/s}$ is the Fermi velocity. Thermal carriers (both electrons and holes) make the conductivity finite at all nonzero T.

12.9 Ambient Doping

Because graphene is atomically thin, its Fermi level is extremely sensitive to surface adsorbates. When exposed to air:

- H_2O and O_2 molecules tend to physisorb on graphene's surface, acting as electron acceptors.
- Each adsorbed molecule withdraws charge from graphene, leaving behind holes (p-type doping).
- The Fermi level E_F then shifts into the valence band by an amount ΔE_{imp}.

Encapsulating graphene in hBN prevents ambient dopants from attaching, keeping E_F near the Dirac point. On SiO_2 substrates (unencapsulated), typical ambient doping shifts E_F by tens of millielectronvolts toward the valence band.

12.10 Intrinsic Conductivity and Sheet Resistance

Define:

n = electron concentration, p = hole concentration, μ_n, μ_p = electron/hole mobilities.

The 2D conductivity of graphene is

$$\sigma_{\mathrm{CH}} = e\,(n\,\mu_n + p\,\mu_p).$$

In a two-terminal measurement with a channel of width W and length L,

$$R_{\mathrm{graphene}} = \frac{L}{W}\,\frac{1}{\sigma_{\mathrm{CH}}}.$$

At $T = 0\,\mathrm{K}$ with puddles present, $n_{\min} = p_{\min} > 0$, yielding a finite minimum conductivity $\sigma_{\min} \approx \frac{4e^2}{\pi h}$. At room temperature, thermal carriers further increase both n and p.

12.11 Measuring the Two-Terminal Resistance

Apply a small drain–source bias V_{DS} and measure the resulting current I_D. Then the two-terminal resistance is

$$R_{\mathrm{measured}} = \frac{V_{DS}}{I_D} \approx R_{\mathrm{graphene}} \quad \text{(neglecting parasitics)}.$$

For theoretical calculation, one must integrate the local conductivity along the channel, accounting for spatial variations in carrier density (e.g., near puddles, near contacts, or under nonzero bias).

13 Resistance and Conductance of Graphene

To compute the graphene channel's resistance or conductance, we need:

1. The physical geometry: width W and length L.
2. The channel conductivity σ_{CH}, which depends on the carrier concentration n, p and mobilities μ_n, μ_p.

The carrier concentrations follow from the density of states (DOS) and the Fermi–Dirac distribution.

13.1 Carrier Concentration from DOS

The total charge density (per unit area) in graphene is

$$Q = -e\,(n - p),$$

where

$$n \;=\; \int_0^{+\infty} \mathrm{DOS}(E)\, f_n(E)\, dE, \quad p \;=\; \int_{-\infty}^{0} \mathrm{DOS}(E)\, \big[1 - f_n(E)\big]\, dE.$$

Here,

$$f_n(E) \;=\; \frac{1}{1 + \exp\big[(E - E_F)/(k_B\, T)\big]} \quad \text{is the Fermi–Dirac distribution,}$$

and the DOS for monolayer graphene (per unit area, per spin, per valley) is

$$\mathrm{DOS}(E) \;=\; \frac{2\,|E|}{\pi\,(\hbar\, v_F)^2}.$$

(The factor of 2 accounts for spin degeneracy and 2 for valley degeneracy, yielding an overall factor of 4).

13.2 Zero-Kelvin Simplification

At $T = 0\,\mathrm{K}$, $f_n(E)$ becomes a step function:

$$f_n(E) = \begin{cases} 1, & E < E_F, \\ 0, & E > E_F. \end{cases}$$

Thus, for electrons (when $E_F > 0$),

$$n = \int_0^{E_F} \frac{2\,E}{\pi\,(\hbar\, v_F)^2}\, dE = \frac{E_F^2}{\pi\,(\hbar\, v_F)^2}.$$

Similarly, for holes (when $E_F < 0$),

$$p = \int_{|E_F|}^{0} \frac{2\,|E|}{\pi\,(\hbar\, v_F)^2}\, dE = \frac{E_F^2}{\pi\,(\hbar\, v_F)^2}, \quad E_F < 0 \text{ (hole-doped).}$$

Hence,

$$n,\, p \;\propto\; E_F^2.$$

At the Dirac point ($E_F = 0$), $n = p = 0$ (neglecting puddles).

13.3 Finite-Temperature Carrier Density

At $T > 0\,\mathrm{K}$, one must evaluate

$$n(T) = \int_0^{+\infty} \frac{2\,E}{\pi\,(\hbar\, v_F)^2} \frac{1}{1 + e^{(E - E_F)/(k_B T)}}\, dE,$$

numerically. Likewise for $p(T)$. Thermal excitations broaden the transition near E_F and produce a nonzero carrier density even when $E_F = 0$.

13.4 Conductivity and Sheet Resistance

Once n and p are known (at a given T and E_F), the channel conductivity is

$$\sigma_{\mathrm{CH}} = e\left(n\,\mu_n + p\,\mu_p\right).$$

If the channel dimensions are W (width) and L (length),

$$G = \sigma_{\mathrm{CH}} \times \frac{W}{L}, \qquad R = \frac{1}{G} = \frac{L}{W\,\sigma_{\mathrm{CH}}}.$$

In practice, one often measures the *sheet resistance*:

$$R_{\square} = \frac{1}{\sigma_{\mathrm{CH}}},$$

and then $R = R_{\square}\,\frac{L}{W}$.

14 Graphene Transistor: From Resistor to Field-Effect Transistor

A GFET is formed by adding a third electrode, the *gate*, which is capacitively coupled to the graphene channel via a thin insulating layer. The gate controls the channel's carrier density and thus its conductivity, very much like in a conventional MOSFET, but with graphene's unique band structure.

14.1 Gate-Dielectric Stack and Capacitance

The gate stack consists of:

- **Gate Electrode:** Typically a metallic film (e.g., Ti/Au or doped poly-Si).
- **Gate Dielectric:** A thin insulator of thickness t_{ox} and permittivity ϵ_{ox}. Common materials: SiO_2, Al_2O_3, or HfO_2.
- **Graphene Channel:** Serves as the second plate of the capacitor.

This forms a metal–insulator–graphene capacitor whose geometric capacitance per unit area is

$$C_{\mathrm{ox}} \;=\; \frac{\epsilon_{\mathrm{ox}}}{t_{\mathrm{ox}}} \quad \left[\mathrm{F/cm^2}\right].$$

The total gate capacitance per unit area, however, is the series combination of geometric $\left(C_{\mathrm{ox}}\right)$ and quantum capacitance $\left(C_Q\right)$.

14.2 Quantum Capacitance of Graphene

Unlike metals (where the DOS is extremely high, so $C_Q \approx +\infty$), graphene's DOS near its Dirac point is low. The *quantum capacitance* C_Q per unit area is defined by

$$C_Q \;=\; \frac{dQ}{dV_{\text{channel}}} \;=\; e\,\frac{dn}{dE_F} \quad \Big[\text{F/cm}^2\Big],$$

where $Q = -\,e\,(\,n - p\,)$ is the channel charge density (per unit area) and $V_{\text{channel}} = E_F/e$ is the channel potential relative to Dirac. At $T = 0\,\text{K}$, one obtains

$$\frac{dn}{dE_F} = \frac{2\,|E_F|}{\pi\,(\hbar\,v_F)^2}, \quad \Longrightarrow \quad C_Q = \frac{2\,e\,|E_F|}{\pi\,(\hbar\,v_F)^2}.$$

At finite temperature,

$$C_Q(T,\,E_F) = \frac{e^2}{\pi\,(\hbar\,v_F)^2}\,k_B T\,\ln\!\big[\,2\cosh\!\big(\tfrac{E_F}{2\,k_B T}\big)\big].$$

Because C_Q can be comparable to or even smaller than C_{ox} near the Dirac point, the net capacitance per unit area is

$$\frac{1}{C_{\text{tot}}} = \frac{1}{C_{\text{ox}}} + \frac{1}{C_Q}.$$

When $|E_F| \to 0$ at $T \approx 0$, $C_Q \to 0$, so $C_{\text{tot}} \approx C_Q$, limiting how effectively the gate can modulate the channel charge.

14.3 Charge–Voltage Relation and Threshold Voltage

Applying a gate–source voltage V_{GS} moves charge into/out of the channel. By Kirchhoff's voltage law around the gate stack,

$$V_{GS} = V_{\text{channel}} + \frac{Q}{C_{\text{ox}}},$$

where $Q = -\,e\,(n - p)$. Equivalently,

$$Q = -\,C_{\text{ox}}\,\big(\,V_{GS} - V_{\text{channel}}\,\big).$$

At the threshold (Dirac) condition, $E_F = 0 \Rightarrow Q = 0$. If ambient or impurity doping yields a net charge Q_{imp} (with Fermi level originally at $E_{F0} \neq 0$), then the gate voltage that exactly cancels that impurity charge is

$$V_{th} = \frac{Q_{\text{imp}}}{C_{\text{ox}}} \;=\; \frac{e\,n_{\text{imp}}}{C_{\text{ox}}}, \quad n_{\text{imp}} = \frac{E_{F0}^2}{\pi\,(\hbar v_F)^2}.$$

For hBN-encapsulated graphene with negligible ambient doping, $n_{\text{imp}} \approx 0$ and hence $V_{th} \approx 0$. On SiO_2, typical $n_{\text{imp}} \sim 10^{11}$–$10^{12}\,\text{cm}^{-2}$, so V_{th} shifts by several volts.

15 Transfer Characteristic of a GFET

The **transfer characteristic** of a GFET is the plot of drain current I_D versus gate–source voltage V_{GS}, at a fixed drain–source bias V_{DS}. Because graphene is ambipolar, I_D exhibits a minimum (often called the Dirac point) when the Fermi level aligns with the Dirac energy.

15.1 Step-by-Step Physical Picture

15.1.1 Initial State: $V_{GS} = 0$

- Ambient impurities dope the channel p-type. Suppose the impurity-induced hole density is $p_{\text{imp}} = n_{\text{imp}} \approx 6 \times 10^{11}\,\text{cm}^{-2}$.
- The corresponding Fermi level is $E_{F0} < 0$, set by $p_{\text{imp}} = \frac{E_{F0}^2}{\pi(\hbar v_F)^2}$.
- At a small V_{DS}, a steady drain current I_{D0} flows, determined by n_{imp}, mobilities, and V_{DS}.

15.1.2 Applying a Positive Gate Voltage: $V_{GS} > 0$

- A positive gate voltage induces a negative channel charge $Q = -\,C_{\text{ox}}\big(V_{GS} - V_{\text{channel}}\big)$.
- Electrons accumulate in the channel and begin to *cancel* impurity-induced holes.
- If $C_{\text{ox}}\,V_{GS}$ corresponds to the charge of three electrons per unit area, those three electrons neutralize three holes, leaving *fewer* holes (e.g., from six holes down to three holes, if originally six).
- The channel remains p-type until Q exactly equals $+\,e\,p_{\text{imp}}$. At that moment, E_F sits at the Dirac point and I_D attains its minimum (Dirac point current).

15.1.3 Beyond the Dirac Point: $V_{GS} > V_{th}$

- For $V_{GS} > V_{th}$, the gate induces more electrons than needed to neutralize holes. The channel becomes n-type.
- Additional electrons accumulate: If $C_{\text{ox}}\,V_{GS}$ corresponds to nine electrons, six electrons fully cancel the original six holes, and three electrons remain.
- The channel conductivity now *increases* with further V_{GS} as n grows, and I_D rises once more.

15.2 Mathematical Expression for I_D

In the *linear* regime $\big(V_{DS} \ll V_{GS} - V_{th}\big)$, the local channel charge per unit area is

$$Q(x) = -\,e\,\big[n(x) - p(x)\big],$$

where $E_F(x)$ varies slightly along $x \in [0,\, L]$ if $V_{DS} \neq 0$. The local conductivity is

$$\sigma\big[E_F(x)\big] = e\,\big(n(x)\,\mu_n + p(x)\,\mu_p\big).$$

Then

$$I_D = \frac{W}{L}\int_0^L \sigma\big[E_F(x)\big]\,\big[V_{DS}/L\big]\,dx \;\approx\; \frac{W}{L}\,\sigma\big[E_F\big(V_{GS}\big)\big]\,V_{DS},$$

assuming negligible variation of E_F along x. Hence, in the ideal zero-series-resistance limit,

$$I_D(V_{GS}) = \underbrace{\frac{W}{L}\,e}_{\text{geometry}}\;\Big[n(V_{GS})\,\mu_n \;+\; p(V_{GS})\,\mu_p\Big]\;V_{DS}.$$

Here $n(V_{GS})$, $p(V_{GS})$ follow from solving

$$Q(V_{GS}) = -\,e\,\big[n(V_{GS}) - p(V_{GS})\big] = -\,C_{\text{ox}}\,\big[V_{GS} - V_{\text{channel}}(n,p)\big],$$

with $V_{\text{channel}} = E_F/e$. In practice, one numerically solves for E_F from

$$e\,(n-p) = C_{\text{ox}}\big(V_{GS} - \tfrac{E_F}{e}\big),$$

then computes n, p from the DOS integrals.

15.3 Qualitative Transfer Plot

- For $V_{GS} < V_{th}$, the channel is p-type and I_D *decreases* with increasing V_{GS}, because holes are gradually neutralized by gate-induced electrons.
- At $V_{GS} = V_{th}$, the Fermi level coincides with the Dirac point; the carrier density is minimized (only puddle/thermal carriers remain). I_D reaches its lowest value.
- For $V_{GS} > V_{th}$, the channel is n-type and I_D *increases* with further V_{GS}.

A typical transfer curve I_D vs. V_{GS} therefore has a "V-shape" (for symmetric mobilities). On SiO_2, electron mobility μ_n is often lower than hole mobility μ_p, so the right-hand branch (electrons) is less steep than the left-hand branch (holes). If the channel is encapsulated in hBN (fewer charged traps), $\mu_n \approx \mu_p$ and the two branches become more symmetric.

16 Output Characteristic of a GFET

The **output characteristic** is the plot of I_D vs. V_{DS} at fixed V_{GS}. In graphene, the absence of a bandgap means there is no true "pinch-off" as in a MOSFET. Nonetheless, the following regimes can be identified:

16.1 Low V_{DS} (Ohmic, Linear Regime)

For $V_{DS} \ll V_{GS} - V_{th}$, the channel retains a nearly uniform charge density. Then

$$I_D \approx \frac{W}{L}\,\sigma\big[E_F(V_{GS})\big]\,V_{DS},$$

i.e., $I_D \propto V_{DS}$ with slope $\propto \sigma\big[E_F(V_{GS})\big]$.

16.2 Intermediate V_{DS}

As V_{DS} increases, the channel potential at the drain end drops by V_{DS} relative to the source. The local Fermi level near the drain becomes

$$E_F(x = L) = e\left[V_{GS} - V_{DS}\right] - E_{\text{Dirac}}.$$

If $V_{DS} \approx V_{GS} - V_{th}$, the drain end reaches the Dirac point while the source end remains strongly doped (p- or n-type). This creates a "channel pinch-off" region: near the drain, carrier density is minimal. Current is still carried by thermal/puddle carriers at that point.

16.3 High V_{DS} (Quasi-Saturation)

Beyond that "pinch-off" onset, additional increases in V_{DS} produce only slight increases in I_D. Graphene's linear dispersion and zero bandgap cause continued ambipolar conduction: if V_{DS} becomes even larger, the drain end can flip to opposite-type conduction (called "drain-induced doping"). In practice, for moderate V_{DS}, one observes a knee in I_D vs. V_{DS} and a quasi-saturation region—though not a true saturation as in silicon MOSFETs.

16.4 Qualitative Output Plot

- At fixed V_{GS} well above V_{th} (strong n-type), I_D increases linearly with small V_{DS}.
- Near $V_{DS} \approx V_{GS} - V_{th}$, a "knee" appears. The current starts to bend over due to local channel pinch-off near the drain.
- For further V_{DS}, I_D remains almost flat or even slightly decreases (ambipolar conduction) before rising again at very large V_{DS} (reverse branch).
- The exact shape depends on channel length, mobility, doping, and temperature.

17 Quantum Capacitance in GFETs

Because graphene's DOS near the Dirac point is low, the *quantum capacitance* C_Q significantly influences the gate-to-channel capacitance.

17.1 Definition and Physical Meaning

Quantum capacitance is defined (per unit area) as:

$$C_Q = \frac{dQ}{dV_{\text{channel}}} = e\,\frac{dn}{dE_F},$$

where $Q = -\,e\,(n - p)$ is the net channel charge density and $V_{\text{channel}} = E_F/e$. At $T \approx 0$,

$$C_Q = \frac{2\,e\,|E_F|}{\pi\,(\hbar\,v_F)^2}.$$

At room temperature,

$$C_Q(T, E_F) = \frac{e^2}{\pi(\hbar v_F)^2}\, k_B T\ \ln\Big[\, 2\cosh\big(\tfrac{E_F}{2k_B T}\big)\Big].$$

17.2 Total Gate Capacitance

The overall (differential) capacitance per unit area seen by the gate is

$$\frac{1}{C_{\text{tot}}} = \frac{1}{C_{\text{ox}}} + \frac{1}{C_Q}.$$

Near the Dirac point $(E_F \approx 0)$, C_Q becomes very small, so $C_{\text{tot}} \approx C_Q$. Well away from the Dirac point $(|E_F| \gg k_B T)$, $C_Q \to$ large and $C_{\text{tot}} \approx C_{\text{ox}}$. Therefore:

1. **Dirac-Point Regime:** $E_F \approx 0 \implies C_Q \approx 0$, so $C_{\text{tot}} \approx C_Q \ll C_{\text{ox}}$. Gate efficiency is poor.
2. **Doped Regime:** $|E_F|$ large $\implies C_Q \gg C_{\text{ox}}$, so $C_{\text{tot}} \approx C_{\text{ox}}$.

17.3 Effect on Capacitance–Voltage (CV) Measurements

Experimentally, one measures the small-signal capacitance between gate and source as a function of V_{GS}. The CV curve of a GFET on SiO_2 typically shows:

- A minimum capacitance at $V_{GS} = V_{th}$ (Dirac point), where $C_Q \approx 0$.
- Two branches (for $V_{GS} < V_{th}$ and $V_{GS} > V_{th}$) in which C_{tot} increases because $|E_F|$ grows and C_Q increases.

From the CV data, one can extract both C_{ox} (by fitting C_{tot} far from Dirac) and $C_Q(V_{GS})$ (by analyzing the low-capacitance region).

18 Band Structure Modulation in GFETs

When V_{GS} is applied, the graphene band structure (Dirac cone) shifts vertically in energy by an amount

$$\Delta E = -\, e\, V_{\text{channel}}.$$

Thus, if V_{GS} is positive, the Dirac point shifts downward relative to the source Fermi level, and electrons accumulate (channel becomes n-type).

18.1 Capacitive Voltage Division

By Kirchhoff's law,

$$V_{GS} = V_{\text{channel}} \ + \ \frac{Q}{C_{\text{ox}}},$$

where $Q = -\,e\,[\,n(V_{\text{channel}}) - p(V_{\text{channel}})\,]$. In differential form,

$$dV_{GS} = dV_{\text{channel}} \;+\; \frac{1}{C_{\text{ox}}}\,dQ.$$

Since $dQ/dV_{\text{channel}} = C_Q$, we get

$$\frac{dV_{GS}}{dQ} = \frac{dV_{\text{channel}}}{dQ} \;+\; \frac{1}{C_{\text{ox}}} = \frac{1}{C_Q} \;+\; \frac{1}{C_{\text{ox}}},$$

confirming $C_{\text{tot}}^{-1} = C_Q^{-1} + C_{\text{ox}}^{-1}$.

18.2 Relation Between E_F and V_{GS}

Define $n_{\text{classical}} = C_{\text{ox}}\,(V_{GS} - V_{th})/e$. Far from Dirac ($|V_{GS} - V_{th}| \gg 0$), $C_Q \gg C_{\text{ox}}$, so the channel behaves classically:

$$n \approx n_{\text{classical}} \implies E_F = \hbar v_F\,\sqrt{\pi\,n} = \hbar v_F\,\sqrt{\frac{\pi\,C_{\text{ox}}}{e}\,(V_{GS} - V_{th})}.$$

Hence,

$$e\,V_{\text{channel}} = \operatorname{sgn}(V_{GS} - V_{th})\,\hbar v_F\,\sqrt{\pi\,C_{\text{ox}}\,(V_{GS} - V_{th})/e}.$$

Near the Dirac point $\big(|V_{GS} - V_{th}| \to 0\big)$, $C_Q \ll C_{\text{ox}}$, so $C_{\text{tot}} \approx C_Q$ and

$$e\,V_{\text{channel}} \approx e\,(V_{GS} - V_{th}) \quad \big(\text{linear regime: } C_Q \to 0\big).$$

19 Summary of Key Physical Relationships

19.1 Graphene Channel Charge and Carrier Density

$$n = \int_0^{\infty} \frac{2\,E}{\pi(\hbar v_F)^2}\,\frac{1}{1 + e^{(E-E_F)/(k_BT)}}\,dE, \quad p = \int_{-\infty}^{0} \frac{2\,|E|}{\pi(\hbar v_F)^2}\,\frac{1}{1 + e^{(E-E_F)/(k_BT)}}\,dE.$$

19.2 Zero-K Simplified Carrier Density

$$n(T=0) = \frac{E_F^2}{\pi(\hbar v_F)^2}, \quad p(T=0) = \frac{E_F^2}{\pi(\hbar v_F)^2}.$$

19.3 Quantum Capacitance

$$C_Q = e\,\frac{dn}{dE_F} \;=\; \frac{2\,e\,|E_F|}{\pi(\hbar v_F)^2} \quad (T=0), \quad C_Q(T) = \frac{e^2}{\pi(\hbar v_F)^2}\,k_BT\,\ln\Big[\,2\cosh\big(\tfrac{E_F}{2k_BT}\big)\Big].$$

19.4 Total Capacitance: Series Combination

$$\frac{1}{C_{\text{tot}}} = \frac{1}{C_{\text{ox}}} + \frac{1}{C_Q}.$$

19.5 Gate-Channel Voltage Division

$$V_{GS} = V_{\text{channel}} + \frac{Q}{C_{\text{ox}}}, \quad Q = -\,e\,(n-p).$$

19.6 Drain Current in the Linear Regime

$$I_D \approx \frac{W}{L}\, e\left[n(V_{GS})\,\mu_n + p(V_{GS})\,\mu_p\right] V_{DS}, \quad \big(V_{DS} \ll |V_{GS} - V_{th}|\big).$$

19.7 Transfer Characteristic Key Points

- $V_{GS} \ll V_{th}$: Strong p-type conduction, I_D large.
- $V_{GS} \to V_{th}$: $E_F \to 0$ (Dirac), $I_D \to I_{\min}$.
- $V_{GS} > V_{th}$: Channel n-type, I_D rises again.

19.8 Output Characteristic Key Points

- $V_{DS} \ll |V_{GS} - V_{th}|$: $I_D \approx (W/L)\,\sigma\,V_{DS}$.
- $V_{DS} \approx |V_{GS} - V_{th}|$: "pinch-off" region near drain; knee in I_D.
- $V_{DS} > |V_{GS} - V_{th}|$: Quasi-saturation or ambipolar conduction onset, no true saturation plateau.

20 Plotting Transfer and Output Characteristics

To visualize GFET behavior:

1. **Transfer Curve** (I_D vs. V_{GS} at fixed V_{DS}):
   - Numerically solve for E_F as a function of V_{GS} from
   $$e\,[\,n(E_F,T) - p(E_F,T)\,] = C_{\text{ox}}\left(V_{GS} - \tfrac{E_F}{e}\right).$$
   - Compute $n(E_F,T)$, $p(E_F,T)$ via DOS integrals (including thermal broadening).
   - Calculate $\sigma_{\text{CH}}(E_F) = e\,[n\,\mu_n + p\,\mu_p]$.
   - Plot $I_D = (W/L)\,\sigma_{\text{CH}}\,V_{DS}$ versus V_{GS}.
2. **Output Curve** (I_D vs. V_{DS} at fixed V_{GS}):
   - At each V_{DS}, account for local channel potential drop:
   $$E_F(x) = e\big[V_{GS} - V(x)\big] \;-\; E_{\text{Dirac}},$$
   where $V(x)$ varies from 0 at source to V_{DS} at drain.

- Integrate local conductivity along x:

$$I_D = W \int_0^L \sigma\big[E_F(x)\big] \, \frac{dV}{dx} \, dx,$$

  with $dV/dx = V_{DS}/L$ for the linear regime.
- Numerically solve for $I_D(V_{DS})$ at each V_{GS}.

21 What Are "Transfer" and "Output" Characteristics?

Before performing any bias calculation, we must understand the two fundamental DC characteristics of a transistor:

21.1 Transfer Characteristic (I_D vs. V_{GS} at fixed V_{DS})

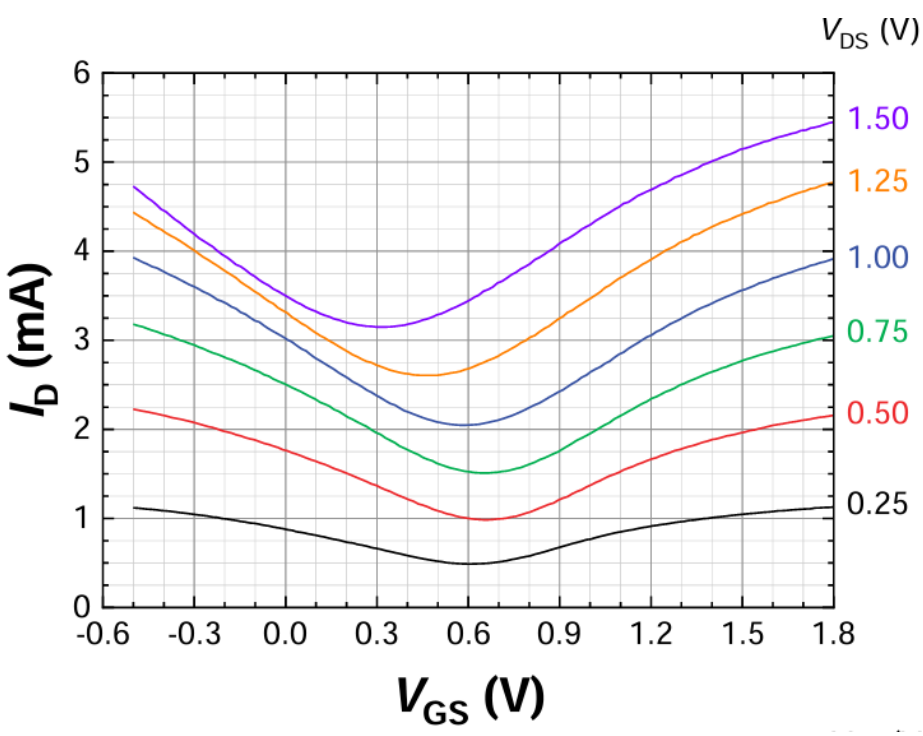

This curve plots the drain current I_D as a function of the gate-to-source voltage V_{GS}, while holding the drain-to-source voltage V_{DS} fixed at a non-negligible value (e.g., 20 mV, 100 mV, 0.2 V, etc.). It explains how the gate voltage modulates the drain current

- Each trace in this family corresponds to a specific V_{DS}.
- As V_{DS} increases, the entire curve lifts upward due to increased channel charge (from the linear potential drop).

- The minimum point (Dirac or charge-neutrality point) shifts rightward by approximately $V_{DS}/2$.

Key Features:

- Dirac (minimum-conductance) point occurs at $V_{GS} = V_{th} + \frac{V_{DS}}{2}$.
- In log-scale current plots, conduction is hole-dominated for V_{GS} below this point and electron-dominated above.

21.2 Output Characteristic (I_D vs. V_{DS} at fixed V_{GS})

This plot shows how I_D varies with V_{DS} for several fixed values of V_{GS}.

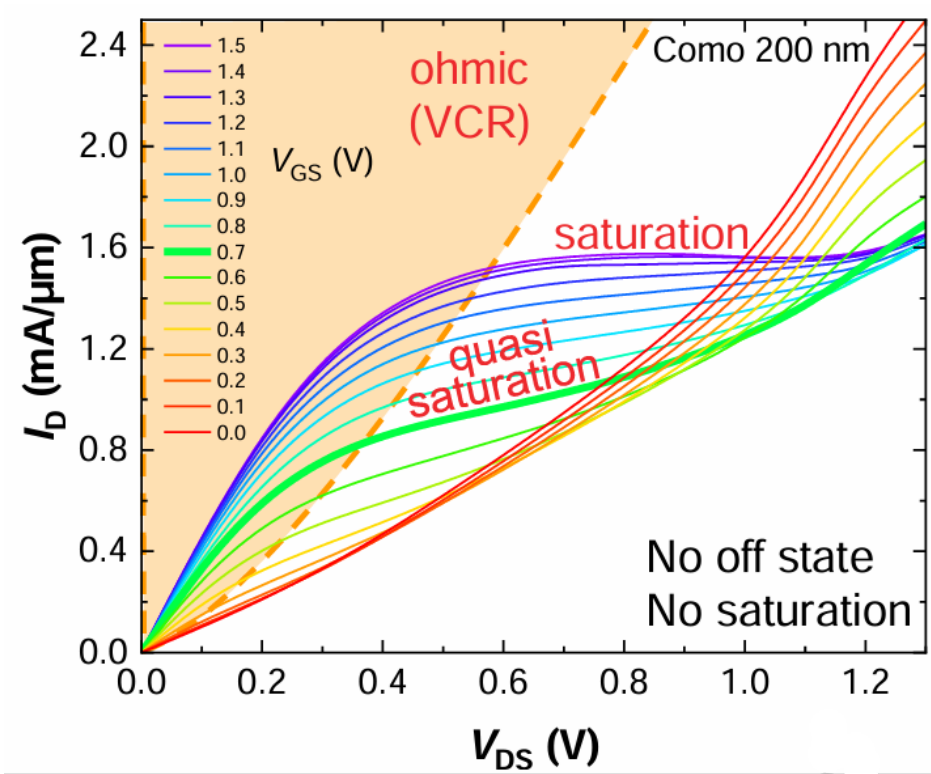

Typical Regions for a GFET:

- **Ohmic (linear) region:** $I_D \propto V_{DS}$ when $V_{DS} < V_{GS} - V_{th}$.
- **Quasi-saturation:** As $V_{DS} \to V_{GS} - V_{th}$, the channel near the drain depletes, causing I_D to increase more slowly.
- **Superohmic (hole-accumulation) region:** For $V_{DS} > V_{GS} - V_{th}$, hole accumulation near the drain causes I_D to rise again.

Why These Matter:

- The transfer plot shows how I_D responds to changes in V_{GS} (with fixed V_{DS}).
- The output plot shows how I_D responds to changes in V_{DS} (with fixed V_{GS}).

22 Static Voltage Transfer Characteristic $V_{\text{OUT}} = f(V_{\text{IN}})$

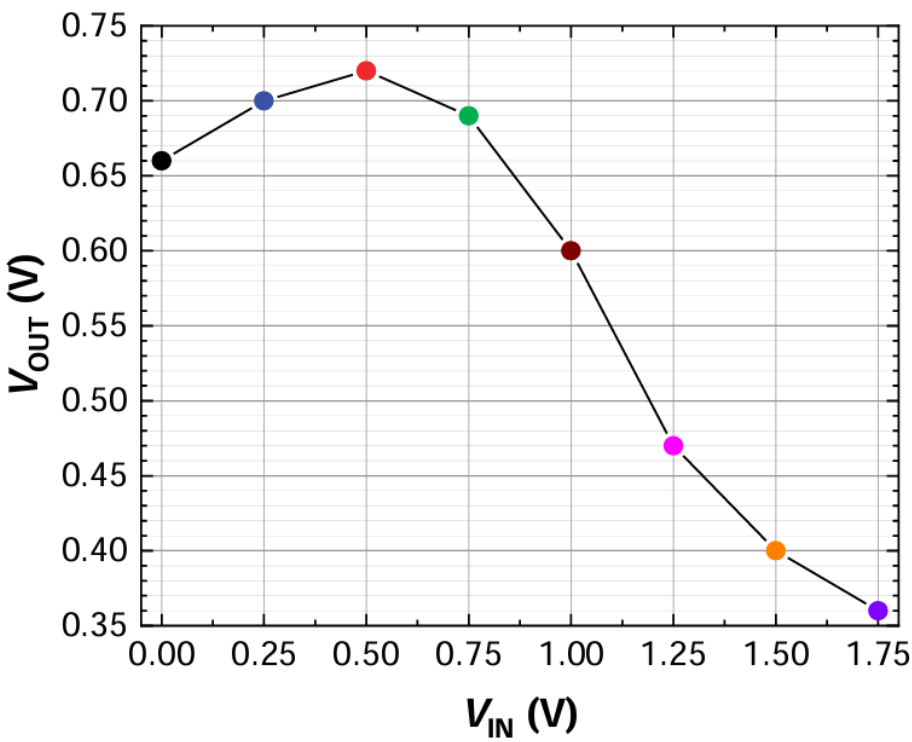

Problem Statement: Plot $V_{\text{OUT}} = f(V_{\text{IN}})$ for $X \leq V_{\text{IN}} \leq Y$, where V_{IN} and V_{OUT} are the DC gate–source and drain–source voltages, respectively. The static transfer curve is found by locating, for each V_{IN}, the intersection of the load line

$$I_D = \frac{V_{DD} - V_{DS}}{R_L}$$

with the transistor's output characteristic corresponding to $V_{GS} = V_{\text{IN}}$.

Steps:

1. **Specify given parameters.**
   - Supply voltage V_{DD}.
   - Load resistor R_L.
   - Input-voltage range $X \leq V_{\text{IN}} \leq Y$.

- Transistor's output characteristic data (or equations):

$$I_D = f_{\text{out}}(V_{DS};\, V_{GS}) \quad \text{for various fixed } V_{GS}.$$

2. **Prepare the load line equation.** The load line in the (V_{DS}, I_D) plane is linear:

$$I_D \;=\; \frac{V_{DD} - V_{DS}}{R_L}, \quad \text{or equivalently} \quad V_{DS} = V_{DD} - I_D\, R_L.$$

3. **Obtain (or plot) the transistor's output characteristics.** For each fixed gate–source voltage $V_{GS} = V_{\text{IN}}$, the device has an output curve I_D vs. V_{DS}. Typically:

$$\big\{\, I_D(V_{DS};\, V_{GS} = V_{\text{IN}}),\ 0 \le V_{DS} \le V_{DD} \big\}.$$

   Label each curve by its corresponding V_{GS}. In particular, prepare curves for

$$V_{GS} = X,\ X + \Delta,\ X + 2\Delta,\ \ldots,\ Y$$

   at a suitable step Δ.

4. **Draw the load line on the same axes.** In the (V_{DS}, I_D) coordinate system:

   - At $V_{DS} = 0$, the load-line intercept is $I_D = V_{DD}/R_L$.
   - At $I_D = 0$, the load-line intercept is $V_{DS} = V_{DD}$.

   Connect those two points with a straight line:

$$I_D = \frac{V_{DD} - V_{DS}}{R_L}.$$

5. **Find intersection points for each $V_{GS} = V_{\text{IN}}$.** For each V_{IN} in $[X, Y]$:

   (a) Consider the transistor's output curve at $V_{GS} = V_{\text{IN}}$.

   (b) Solve simultaneously:

$$I_D \;=\; f_{\text{out}}\big(V_{DS};\, V_{GS} = V_{\text{IN}}\big), \quad I_D \;=\; \frac{V_{DD} - V_{DS}}{R_L}.$$

   (c) Denote the intersection coordinate by $\big(V_{DS}^*,\, I_D^*\big)$. By definition, $V_{DS}^* = V_{\text{OUT}}$ and $V_{GS} = V_{\text{IN}}$.

   (d) Record the pair $\big(V_{\text{IN}},\, V_{\text{OUT}}\big) = \big(V_{GS},\, V_{DS}^*\big)$.

6. **Tabulate $\big(V_{\text{IN}},\, V_{\text{OUT}}\big)$ pairs.** After finding each intersection, form a table:

V_{IN}	V_{OUT}
X	$V_{DS}^*(V_{GS} = X)$
$X + \Delta$	$V_{DS}^*(V_{GS} = X + \Delta)$
$\vdots$	$\vdots$
Y	$V_{DS}^*(V_{GS} = Y)$

   Choose Δ small enough to capture the curve shape.

7. **Plot V_{OUT} vs. V_{IN}.** In Cartesian coordinates:

$$\text{horizontal axis: } V_{\text{IN}}, \qquad \text{vertical axis: } V_{\text{OUT}}.$$

Plot each $\big(V_{\text{IN}}, V_{\text{OUT}}\big)$ as a point, then join them smoothly to obtain the static transfer characteristic:

$$V_{\text{OUT}} = f(V_{\text{IN}}), \quad X \le V_{\text{IN}} \le Y.$$

8. **Identify key regions and slopes.**
   - *Cut-off region:* For $V_{\text{IN}} < V_{th}$ (if transistor has threshold), $I_D \approx 0$ and $V_{\text{OUT}} \approx V_{DD}$.
   - *Intermediate region:* As V_{IN} increases, the slope $\frac{dV_{\text{OUT}}}{dV_{\text{IN}}}$ determines the small-signal voltage gain.
   - *Saturation region:* For large V_{IN}, I_D is high and $V_{\text{OUT}} \to$ small value (near zero or pinned by saturation).
9. **Annotate transistor regions (optional).** If desired, map the DC operating points onto the transistor's (V_{GS}, V_{DS}) plane to show when the device is in linear, saturation, or cutoff. Typically:

$$V_{DS}^* > V_{GS} - V_{th} \implies \text{saturation}, \quad V_{DS}^* < V_{GS} - V_{th} \implies \text{linear}.$$

10. **Check consistency and refine Δ.** If the plotted curve is too coarse, reduce Δ (choose more intermediate V_{IN}) and repeat intersections to improve accuracy.

Notes:

- The same procedure applies whether the transistor is a MOSFET, GFET, BJT (with suitable modifications to the output-characteristic family).
- If analytical expressions for $I_D(V_{DS}; V_{GS})$ are available, one may solve for V_{DS}^* algebraically. Otherwise, graphical or numerical intersection (e.g. Newton's method) is used.
- The slope of V_{OUT} vs. V_{IN} is the *DC voltage gain* at each bias point; the steepest portion corresponds to maximum gain.

23 Defining the Quiescent (DC) Operating Point Q

In any single-stage amplifier, the transistor is given a constant DC bias so that, around that bias point, small AC variations can be linearly amplified. That constant-bias point is called the quiescent point (or "Q-point"). Concretely:

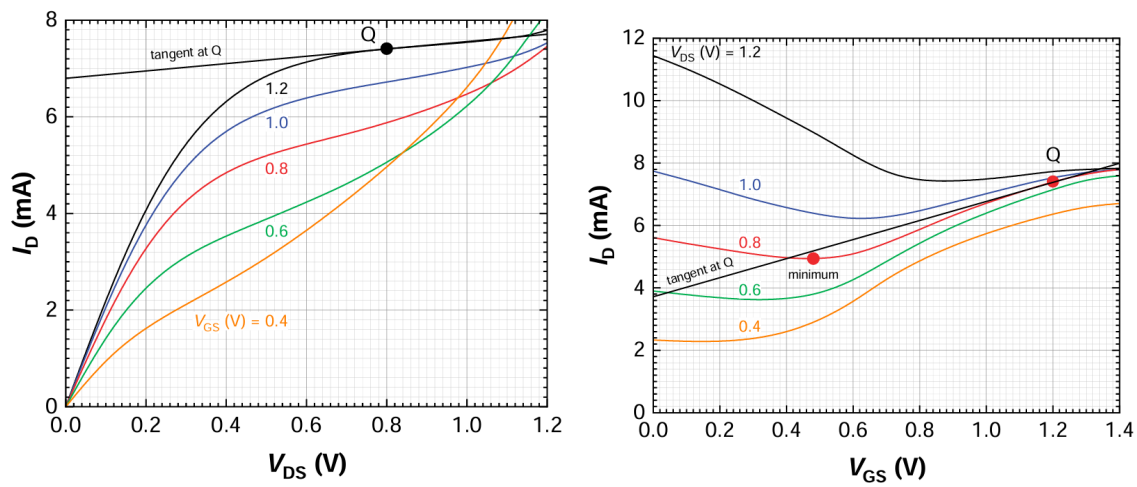

23.1 DC Gate Bias V_{GS}

Suppose we choose a certain DC gate voltage $V_{G,\mathrm{DC}}$. In the common-source amplifier, this may come from a resistor divider or a fixed bias source. Denote it simply V_{GS} (DC).

23.2 DC Drain Bias via V_{DD} and Load Resistor R_L

The drain lies at $V_{DD} - I_D R_L$ (by Kirchhoff's law).

If we fix V_{DD} once and for all, then for a given I_D produced by the gate bias, the corresponding drain-to-source voltage is

$$V_{DS} = V_{DD} - I_D R_L.$$

Conversely, if we pick a target V_{DS} (say 0.8 V), and we know the value of R_L, we can solve for the only I_D that satisfies $V_{DD} - I_D R_L = 0.8\,\mathrm{V}$.

23.3 Intersection = Q

On the output plot I_D vs. V_{DS} at the chosen V_{GS}, draw the "load line" $I_D = (V_{DD} - V_{DS})/R_L$. Wherever that straight line intersects the transistor's output curve for the chosen V_{GS}, that coordinate $(V_{DS,Q}, I_{D,Q})$ is the Q-point in the output-characteristic space.

On the transfer plot I_D vs. V_{GS} (at the same V_{DS} used to generate that transfer curve), one finds the point whose (V_{GS}, I_D) equals (DC bias, $I_{D,Q}$). That is Q in the transfer-curve space.

In other words:

- Pick (or later determine) a DC gate voltage V_{GS}.
- For that V_{GS}, the transistor "wants" to draw some DC drain current $I_{D,\text{from transfer}}$ (if we held V_{DS} fixed).
- Meanwhile, the external load resistor and V_{DD} together force I_D to satisfy $I_D = (V_{DD} - V_{DS})/R_L$.

- Q is where the transistor's own preferred I_D (at that V_{GS}) matches the load line.

Because in our problem we want $V_{DS,Q} = 0.8\,\mathrm{V}$, we will force the load line to pass through $(0.8\,\mathrm{V}, I_{D,Q})$. That immediately pins down $I_{D,Q} = (V_{DD} - 0.8)/R_L$. But we also know from the transfer curve that at that same gate bias V_{GS}, the transistor's DC I_D must be exactly $I_{D,Q}$. So matching those two conditions pins down V_{DD}.

24 Finding the Ambient Doping Concentration in the GFET

In this section, we extract the ambient (impurity) doping concentration n_{imp} of our GFET, based on the DC operating point Q from part. We assume:

- **No quantum capacitance.**
- **Negligible thermal carrier excitation and no electron-hole puddles.**
- The device exhibits a clear Dirac swing in its transfer curve.

Consequently, the only carriers at zero gate bias are those due to impurities.

Key Steps:

1. Identify the Dirac (minimum-current) point on the transfer characteristic to determine the effective threshold (Dirac) voltage V_{th}.
2. Relate the impurity charge density σ_{imp} to the gate-oxide capacitance C_{ox} and V_{th}.
3. Convert the impurity charge density into a 2D carrier concentration n_{imp}.
4. Comment on whether the impurities are p-type or n-type, based on the sign of V_{th}.

24.1 Identifying the Dirac Voltage V_{th}

Transfer Characteristic Recap. Recall that the transfer characteristic plots

$$I_D \quad \text{versus} \quad V_{GS},$$

for a fixed (non-negligible) drain-source voltage V_{DS}. Each trace corresponds to a particular V_{DS}. The minimum of each curve—the *Dirac point*—occurs where the channel has equal electron and hole densities, giving minimal conductivity. In an unbiased transistor, this occurs exactly at the intrinsic Dirac point $V_{GS} = V_{th0}$. In the presence of impurities, however, the "minimum" in the transfer curve shifts to

$$V_{GS} = V_{th} + \frac{V_{DS}}{2},$$

where V_{th} is the *Dirac (threshold) voltage* of the transistor when $V_{DS} = 0$. For a given V_{DS}, one reads off the gate-voltage at which I_D is minimized. Subtracting $V_{DS}/2$ gives V_{th}.

Step-by-Step Measurement.

1. From the *transfer characteristic* at $V_{DS} = V_{DS,Q}$ (for Q in part (a), $V_{DS,Q} = 0.8\,\mathrm{V}$), locate the gate-voltage $V_{GS,\min}$ at which I_D is minimum.

2. Compute
$$V_{th} \;=\; V_{GS,\min} \;-\; \frac{V_{DS,Q}}{2} \;=\; V_{GS,\min} \;-\; 0.4\ \mathrm{V}.$$

For example, if the minimum of the I_D vs. V_{GS} curve at $V_{DS} = 0.8\,\mathrm{V}$ occurs at $V_{GS,\min} = 0.48\,\mathrm{V}$, then
$$V_{th} \;=\; 0.48 - 0.40 = 0.08\ \mathrm{V}.$$

24.2 Impurity Charge Density σ_{imp}

Neglecting quantum capacitance and all thermal/puddle contributions, the only residual channel charge at $V_{GS} = 0$ is due to impurities. At the Dirac threshold $V_{GS} = V_{th}$ (with $V_{DS} = 0$), those impurities exactly compensate any induced gate charge. Thus the *impurity-induced surface charge density* is
$$\sigma_{\mathrm{imp}} \;=\; C_{\mathrm{ox}}\, V_{th},$$
where
$$C_{\mathrm{ox}} = \frac{\epsilon_{\mathrm{ox}}}{t_{\mathrm{ox}}} \quad \text{(capacitance per unit area).}$$
Here:

- ϵ_{ox} is the permittivity of the gate insulator,
- t_{ox} is its thickness,
- V_{th} is the (zero-bias) Dirac voltage measured above.

24.2.1 Why This Formula Holds

- At $V_{GS} = V_{th}$, the net induced charge in the channel is zero: the gate's capacitor has drawn charge $+C_{\mathrm{ox}}\, V_{th}$ onto its plate, which must be matched by $-C_{\mathrm{ox}}\, V_{th}$ in the channel.
- That channel charge comes entirely from impurities (since no thermal electrons/holes remain at $T = 0$ and quantum capacitance is neglected).
- Therefore $\sigma_{\mathrm{imp}} = -(-C_{\mathrm{ox}}\, V_{th}) = C_{\mathrm{ox}}\, V_{th}$ in magnitude.

24.3 Converting to Carrier Concentration n_{imp}

In a two-dimensional channel (graphene), the *surface* charge density σ_{imp} (charge per unit area) is related to the 2D impurity concentration n_{imp} (carriers per unit area) by:

$$\sigma_{\text{imp}} = e\, n_{\text{imp}},$$

where e is the elementary charge ($1.602 \times 10^{-19}\,\text{C}$). Hence

$$n_{\text{imp}} \;=\; \frac{\sigma_{\text{imp}}}{e} \;=\; \frac{C_{\text{ox}}\, V_{th}}{e}.$$

Substituting $C_{\text{ox}} = \epsilon_{\text{ox}}/t_{\text{ox}}$, we get:

$$n_{\text{imp}} = \frac{\epsilon_{\text{ox}}}{t_{\text{ox}}}\,\frac{V_{th}}{e}.$$

- If V_{th} is positive, this n_{imp} is a *hole* density (p-type) because a positive gate voltage was required to bring the Fermi level to Dirac.
- If V_{th} had been negative, it would indicate n-type doping.

Suppose the gate insulator is SiO_2 with:

$$\epsilon_{\text{ox}} = 3.45 \times 10^{-11}\,\text{F/m}, \quad t_{\text{ox}} = 10\,\text{nm} = 10 \times 10^{-9}\,\text{m}.$$

Then:

$$C_{\text{ox}} = \frac{3.45 \times 10^{-11}}{10 \times 10^{-9}} = 3.45 \times 10^{-3}\,\text{F/m}^2.$$

If from the transfer curve we found $V_{th} = +0.38\,\text{V}$, then:

$$\sigma_{\text{imp}} = C_{\text{ox}}\, V_{th} = \left(3.45 \times 10^{-3}\right)(0.38) = 1.311 \times 10^{-3}\,\text{C/m}^2.$$

Hence:

$$n_{\text{imp}} = \frac{1.311 \times 10^{-3}}{1.602 \times 10^{-19}} \approx 8.19 \times 10^{15}\,\text{m}^{-2} = 8.19 \times 10^{11}\,\text{cm}^{-2}.$$

Thus the ambient impurity concentration is

$$\boxed{n_{\text{imp}} \approx 8.2 \times 10^{11}\,\text{cm}^{-2}.}$$

Because $V_{th} > 0$, these impurities are *p-type* (holes) in the channel.

24.4 Discussion and Type of Doping

- The fact that $V_{th} > 0$ means that, at zero gate bias, the Fermi level lies below Dirac (in the valence band), so holes dominate. Therefore the ambient doping is *p-type*.
- In practice, typical GFETs on SiO_2 show n_{imp} on the order of 10^{11}–$10^{12}\,\text{cm}^{-2}$. Our extracted value $8.2 \times 10^{11}\,\text{cm}^{-2}$ is consistent with moderately doped graphene.

- Because we neglected quantum capacitance, our n_{imp} is slightly overestimated. A finite quantum capacitance would require a slightly larger V_{th} to achieve the same channel charge. But by neglecting it, we have obtained a good zeroth-order estimate.

Of course, the channel type during operation is n-type or p-type respectively if $V_{GS} > V_{th}$ or $V_{GS} < V_{th}$.

---

25 All about Low-Frequency Small-Signal Equivalent Circuit ("Hybrid-π" Style)

Suppose the total gate-to-source voltage is given by:

$$v_{\text{in}}(t) = V_{GS} + \Delta v_{\text{in}}(t),$$

where V_{GS} is the DC (average) bias and $\Delta v_{\text{in}}(t)$ is a small time-varying AC ripple.

On your time axis, you draw $v_{\text{in}}(t)$ (the blue curve). Each vertical slice at time t_i has a value $v_{\text{in}}(t_i)$.

Above, you have the DC transfer plot $I_D(V_{GS})$ at the chosen (fixed) V_{DS}.

At some instant t_i, if the gate voltage is $v_{\text{in}}(t_i)$, then you go to the transfer curve, find the point

$$(V_{GS} = v_{\text{in}}(t_i),\ I_D),$$

and read off the corresponding I_D.

That I_D (at that same moment) tells you the total drain current. From there, you can compute the instantaneous drain-to-source voltage if you know your load resistor, etc., and thus obtain the instantaneous output voltage $v_{\text{out}}(t_i)$.

In other words, for each point on the blue curve $v_{\text{in}}(t)$, you map vertically up to the transfer curve to read off I_D, then map that current back to a drain voltage via your load line. Repeating this for all t "traces out" the red waveform $v_{\text{out}}(t)$.

However, if Δv_{in} is small enough, all the points on the transfer curve lie within a narrow horizontal window:

$$[V_{GS} - \epsilon,\ V_{GS} + \epsilon]$$

around the DC bias V_{GS}. Over that small range, the nonlinear curve closely approximates its tangent at the operating point.

Linearization via the Tangent

If $\Delta v_{\text{in}}(t)$ is small enough such that $|\Delta v_{\text{in}}(t)| \ll 1$, then:

$$I_D(V_{GS} + \Delta v_{\text{in}}) \approx I_D(V_{GS}) + \left.\frac{dI_D}{dV_{GS}}\right|_{V_{GS}} \Delta v_{\text{in}} = I_{D,Q} + g_m \Delta v_{\text{in}},$$

where g_m is the transconductance.

Graphically: instead of reading off each point on the curved $I_D(V_{GS})$, you draw the tangent at the operating point $(V_{GS}, I_{D,Q})$. All small signals lie along that straight line to first order.

Similarly, on the output side, if you vary V_{DS} by some small Δv_{DS} around $V_{DS,Q}$, then:

$$I_D(V_{DS,Q} + \Delta v_{DS}) \approx I_{D,Q} + \left.\frac{dI_D}{dV_{DS}}\right|_{V_{DS,Q}} \Delta v_{DS} = I_{D,Q} + g_d \Delta v_{DS},$$

where g_d is the output conductance.

Full (Nonlinear) Drain Current and (Small-Signal) Approximation

The full nonlinear expression for the drain current is:

$$i_D(t) = f\left(v_{gs}(t), v_{ds}(t)\right),$$

with

$$v_{gs}(t) = V_{GS} + \Delta v_{gs}(t), \quad v_{ds}(t) = V_{DS} + \Delta v_{ds}(t).$$

We expand $f(v_{gs}, v_{ds})$ in a two-variable Taylor series about the DC operating point

$$(V_{GS}, V_{DS}) = Q:$$

$$\begin{aligned} i_D(t) &= f(V_{GS} + \Delta v_{gs}, V_{DS} + \Delta v_{ds}) \\ &\approx f(V_{GS}, V_{DS}) + \left.\frac{\partial f}{\partial V_{GS}}\right|_Q \Delta v_{gs}(t) + \left.\frac{\partial f}{\partial V_{DS}}\right|_Q \Delta v_{ds}(t) \\ &= I_{D,Q} + g_m \, \Delta v_{gs}(t) + g_d \, \Delta v_{ds}(t), \end{aligned}$$

where

$$g_m = \left.\frac{\partial I_D}{\partial V_{GS}}\right|_Q, \quad g_d = \left.\frac{\partial I_D}{\partial V_{DS}}\right|_Q.$$

Of course, d stands for *drain*, while m for *mutual*.

Define the small-signal (AC) quantities as:

$$i_d(t) = i_D(t) - I_{D,Q}, \quad v_{gs}(t) = \Delta v_{gs}(t), \quad v_{ds}(t) = \Delta v_{ds}(t).$$

Then, the small-signal equation becomes:

$$i_d = g_m v_{gs} + g_d v_{ds}.$$

For a FET at low frequency, the gate current is approximately zero:

$$i_g = 0.$$

- The transconductance is defined as:

$$g_m = \left.\frac{\partial I_D}{\partial V_{GS}}\right|_Q \quad \text{(in Siemens)}.$$

- The output conductance is:

$$g_d = \left.\frac{\partial I_D}{\partial V_{DS}}\right|_Q \quad \text{(in Siemens)}.$$

- Alternatively, one can write:

$$g_d v_{ds} = \frac{v_{ds}}{r_o}, \quad \text{where} \quad r_o = \frac{1}{g_d}$$

  is the transistor's output impedance.

Equivalent Model Around the Q-Point

Around the quiescent point (Q), the FET can be modeled using a small-signal two-port network.

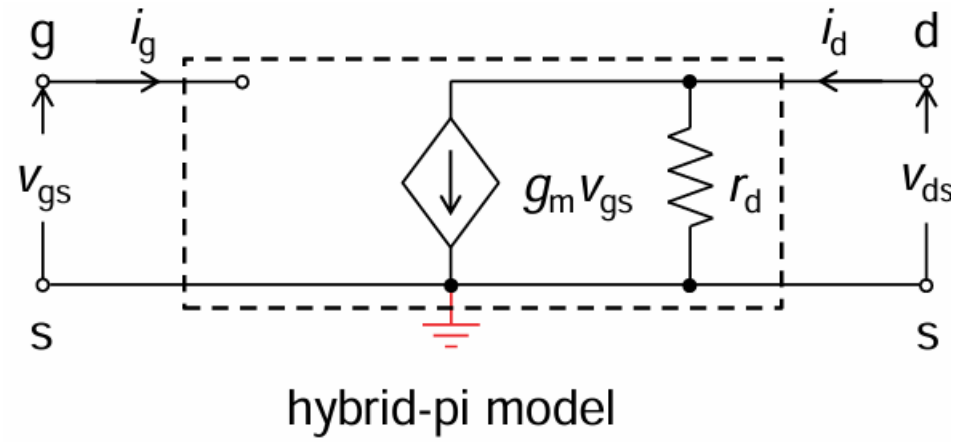

- **Gate:** Modeled as an open node, since

$$i_g = 0.$$

  In practice, it is driven by an input voltage $v_{in}(t)$.

- **Controlled Current Source:** A dependent current source

$$g_m v_{gs}$$

  flows from drain to source.

- **Output Resistance:** A resistor from drain to source with value

$$r_o = \frac{1}{g_d}.$$

- **Load Resistance:** A load resistor R_L is connected from the drain to AC ground (i.e., the DC supply V_{DD} becomes an AC short).

- **Source Node:** In a common-source configuration, the source is typically tied to DC ground, and may also be bypassed to AC ground. Thus, the source is at small-signal ground.

Using Superposition: DC vs. AC Circuits

Since the entire FET + load + source network has been linearized into a small-signal model, we can apply the **principle of superposition**.

DC Regime

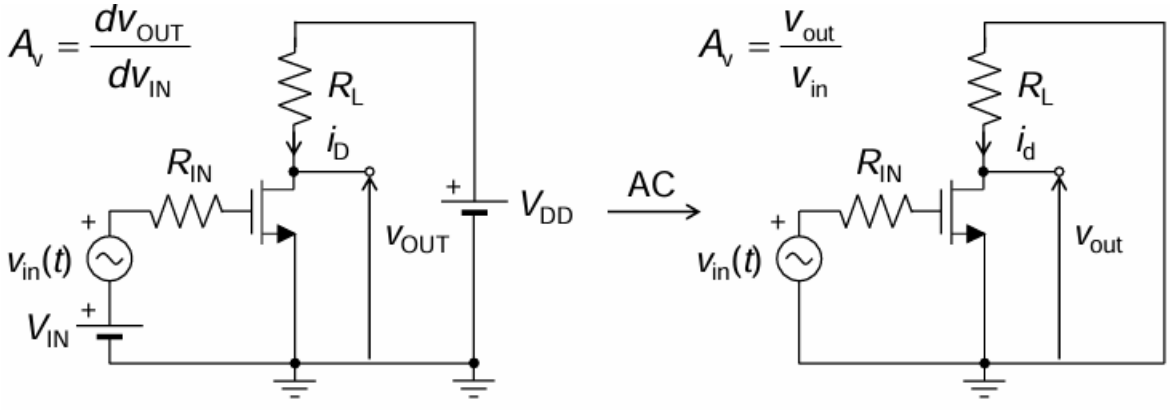

Turn off all AC sources:

$$\Delta v_{in} = 0 \quad \Rightarrow \quad \text{Gate held at } V_{GS}.$$

Solve the DC bias network to determine:

$$I_{D,Q}, \quad V_{DS,Q}.$$

This is often done via the load-line equation:

$$V_{DS} = V_{DD} - I_D R_L.$$

From the DC solution, determine the small-signal parameters:

$$g_m = \left.\frac{\partial I_D}{\partial V_{GS}}\right|_Q, \quad g_d = \left.\frac{\partial I_D}{\partial V_{DS}}\right|_Q.$$

AC Regime

Turn off all DC sources:

$$V_{DD} \to 0, \quad V_{GS} \to 0,$$

leaving only the small AC signal $v_{in}(t)$ at the gate.

- The FET is replaced by its small-signal model:

$$i_d = g_m v_{gs} + g_d v_{ds}, \quad i_g = 0.$$

- Any large DC resistances become AC grounds (e.g., V_{DD} becomes AC ground).
- Solve the resulting AC linear time-invariant (LTI) circuit for $v_{out}(t)$ in terms of $v_{in}(t)$.

Important Notes

Although the AC analysis is conceptually independent, the values of g_m and g_d depend on the location of the Q-point, which is determined in the DC analysis. Therefore, in practice:

1. Perform the DC bias calculation to determine $Q = (V_{GS}, V_{DS})$.
2. Compute g_m and g_d from the transistor characteristics at Q.
3. Use those values in the small-signal (AC) analysis.

Solving the AC Circuit of a Common-Source Amplifier

Altogether, the low-frequency small-signal schematic is: Consider the AC-only schematic of

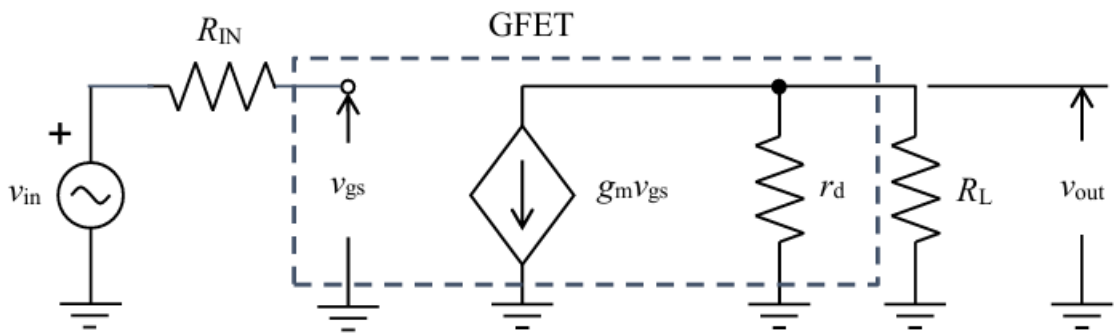

a common-source amplifier with load resistor R_L and small-signal transistor model. Here, the source is at AC ground, so:

$$v_s = 0$$

Node Voltages

$$\begin{aligned} \text{Gate:} \quad & v_g = v_{\text{in}} \\ \text{Source:} \quad & v_s = 0 \quad \Rightarrow \quad v_{gs} = v_g - v_s = v_{\text{in}} \\ \text{Drain:} \quad & v_d = v_{\text{out}} \quad \Rightarrow \quad v_{ds} = v_d - v_s = v_{\text{out}} \end{aligned}$$

KCL at the Drain Node

The small-signal drain current i_d (from drain to source) splits into two branches:

- Through output resistance r_o: $\quad i_{r_o} = \dfrac{v_{\text{out}}}{r_o}$
- Through load resistance R_L: $\quad i_{R_L} = \dfrac{v_{\text{out}}}{R_L}$

Using KCL at the drain node (currents leaving the node as positive):

$$i_d - \frac{v_{\text{out}}}{r_o} - \frac{v_{\text{out}}}{R_L} = 0$$

But since:

$$i_d = g_m v_{gs} + g_d v_{ds} = g_m v_{\text{in}} + g_d v_{\text{out}}$$

Substitute into KCL:

$$g_m v_{\text{in}} + g_d v_{\text{out}} - \frac{v_{\text{out}}}{r_o} - \frac{v_{\text{out}}}{R_L} = 0$$

Note that $g_d = \dfrac{1}{r_o}$, so $g_d v_{\text{out}} = \dfrac{v_{\text{out}}}{r_o}$, and they cancel:

$$g_m v_{\text{in}} - \frac{v_{\text{out}}}{R_L} = 0 \quad \Rightarrow \quad \frac{v_{\text{out}}}{R_L} = g_m v_{\text{in}}$$

Hence:

$$v_{\text{out}} = g_m v_{\text{in}} R_L$$

Alternate Derivation Without Cancellation

KCL at the drain (currents leaving as positive):

$$g_m v_{\text{in}} - \frac{v_{\text{out}}}{r_o} - \frac{v_{\text{out}}}{R_L} = 0 \quad \Rightarrow \quad g_m v_{\text{in}} = v_{\text{out}} \left(\frac{1}{r_o} + \frac{1}{R_L} \right)$$

Solving for v_{out}:

$$v_{\text{out}} = \frac{g_m v_{\text{in}}}{\frac{1}{r_o} + \frac{1}{R_L}} = g_m v_{\text{in}} \left(\frac{r_o R_L}{r_o + R_L} \right)$$

Since the common-source amplifier inverts the signal:

$$A_V = \frac{v_{\text{out}}}{v_{\text{in}}} = -g_m \left(r_o \parallel R_L \right)$$

where

$$r_o \parallel R_L = \frac{r_o R_L}{r_o + R_L}$$

Limiting Cases

- If $r_o \gg R_L$: $\quad r_o \parallel R_L \approx R_L \quad \Rightarrow \quad A_V \approx -g_m R_L$
- If $r_o \ll R_L$: $\quad r_o \parallel R_L \approx r_o \quad \Rightarrow \quad A_V \approx -g_m r_o = -\dfrac{g_m}{g_d}$

Final Gain Formula

$$A_V = -g_m (r_o \parallel R_L)$$

or equivalently:

$$A_V = -\frac{g_m}{g_d + \frac{1}{R_L}}$$

Why Linearize? Why Superposition? — Key Intuitions

A nonlinear transistor has a characteristic:

$$I_D = f(V_{GS}, V_{DS})$$

which cannot be solved in closed form for arbitrary large input waveforms.

Small-signal (amplifier) operation is precisely the regime where:

$$\Delta v_{\text{in}}(t) \ll V_{GS}$$

In this tiny neighborhood, the nonlinear curve can be replaced by its tangent (Taylor's first term).

Replacing each transistor by its local linear model:

$$i_d = g_m v_{gs} + g_d v_{ds}, \qquad i_g = 0$$

makes the entire circuit linear. By superposition, one can then solve for DC (turn off all AC) and AC (turn off all DC) independently.

DC Step

In the DC step, we find the actual numeric values:

$$I_{D,Q}, \quad V_{DS,Q}$$

and then read off:

$$g_m, \quad g_d$$

AC Step

In the AC step, treat:

$$g_m, \quad r_o = \frac{1}{g_d}$$

as fixed constants and solve for gain.

Designing the DC Operating Point Q for Maximum Gain

Transfer-Curve Perspective (g_m)

On the DC transfer plot I_D vs. V_{GS} (for fixed V_{DS}), the slope at each V_{GS} is exactly g_m.

To get maximum g_m, place Q where that slope is highest. Graphically, this is the point where the tangent to the transfer curve is steepest.

Placing Q at the Dirac point (minimum-conductance) is disastrous:

$$\text{slope} = 0 \Rightarrow g_m = 0 \Rightarrow \text{zero gain}$$

Output-Curve Perspective (g_d)

On the DC output plot I_D vs. V_{DS} (for fixed V_{GS}), the slope at each point is g_d.

In ideal saturation, the curve is flat, so:

$$g_d = 0 \Rightarrow r_o \to \infty \Rightarrow \text{huge gain}$$

Real GFETs and short-channel MOSFETs exhibit quasi-saturation: the output curve has a slight upward slope, so:

$$g_d > 0$$

To keep g_d small, pick Q deep in the (quasi-)saturation region—i.e., where the output curve is most horizontal.

Putting Them Together

The true DC operating point $(V_{GS,Q}, V_{DS,Q}, I_{D,Q})$ must satisfy both the transfer-curve and output-curve conditions simultaneously.

In practice:

- Choose a target $V_{DS,Q}$ (e.g., 0.8 V)
- On the transfer curve at $V_{DS} = 0.8\,\text{V}$, find a corresponding $I_{D,Q}$
- That same $I_{D,Q}$ must also satisfy:

$$V_{DS,Q} = V_{DD} - I_{D,Q} R_L$$

The intersection of these two conditions determines $V_{GS,Q}$, $I_{D,Q}$, and hence g_m, g_d.

Why GFETs Struggle

GFETs lack a true flat saturation plateau. Their output curves slope upward even when $V_{GS} - V_{th}$ is large.

Thus, g_d is never extremely small:

$$r_o = \frac{1}{g_d} \text{ is only modest}$$

Consequently, the intrinsic gain of GFETs is limited to a few tens of volts per volt.

25.1 Low-Frequency Small-Signal Equivalent Model

Around Q, for low-frequency (so capacitors are open circuits or large relative to signal), a GFET can be represented by (thanks to the superposition effects, we turn off the DC components of the circuit, keeping the AC ones): Altogether, the low-frequency small-signal schematic is:

Here:

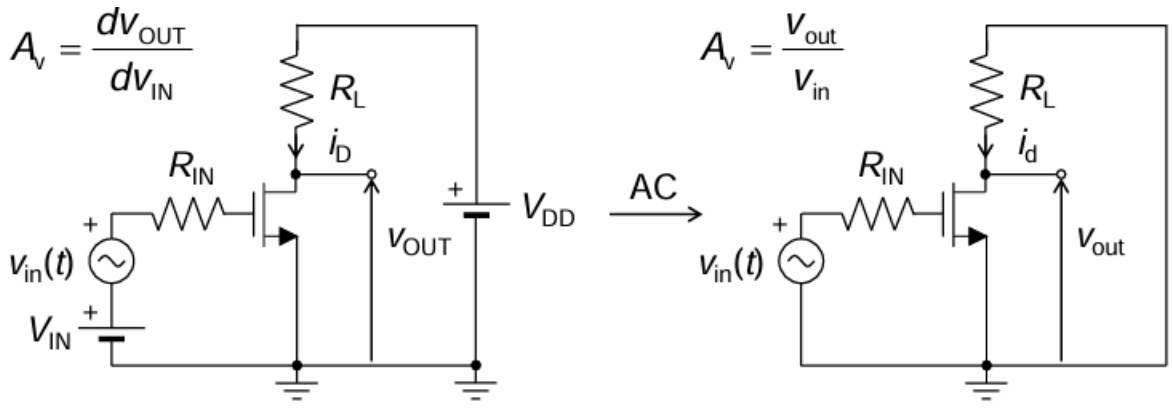

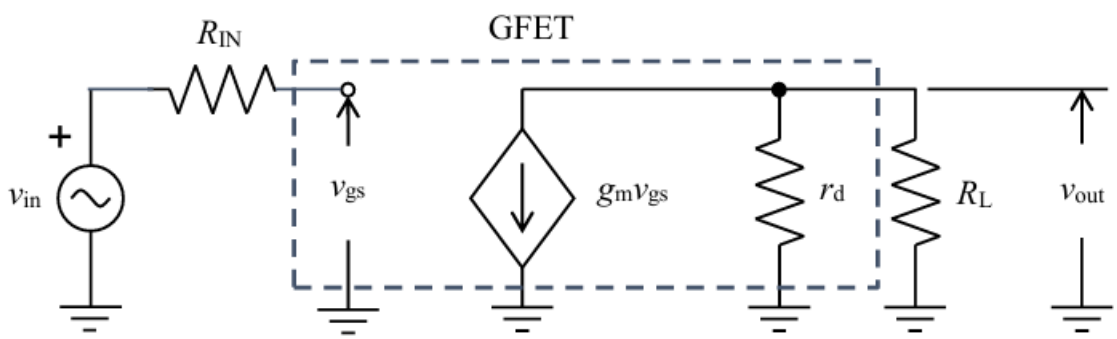

- Gate Node: The gate is essentially a capacitive node (in AC, it sees large gate capacitance), but for DC and very low-frequency, you treat it as open (no DC current into gate).

  Small-signal symbol: Input v_{in} is applied to gate; the gate sees $r_\pi \to \infty$ (for GFET, gate draws negligible DC current).

- Controlled Current Source: From drain to source: $i_d = g_m \cdot v_{gs}$. In other words, a small change Δv_{gs} produces a drain current $\Delta i_d = g_m \Delta v_{gs}$.

- Output Resistance r_o $(= 1/g_d \equiv r_d)$: Represented as a resistor between drain and source that models how I_D changes with V_{DS}.

  In the output-characteristic, this is the slope at Q; thus:

$$r_o = \left(\frac{\partial I_D}{\partial V_{DS}}\right)^{-1}$$

- Source is (for Common-Source) at AC Ground: Any small-signal on the source is usually bypassed (if unbypassed, we'd include a finite source resistance).

  In many common-source GFET amplifiers, the source is directly grounded (i.e. at small-signal AC ground).

- Drain Node: The small-signal resistor R_L (the load) appears between drain and V_{DD}. But since V_{DD} is an AC ground, the small-signal load from drain to ground is simply R_L.

26 Deriving Low-Frequency Voltage Gain $A_V = v_{\mathbf{out}}/v_{\mathbf{in}}$

Using the small-signal model, we can write nodal equation at the drain (the only node of interest besides source):

26.1 Drain Node KCL (Small-Signal)

$$i_d + \underbrace{\frac{v_D - v_S}{r_o}}_{\text{through } r_o} + \underbrace{\frac{v_D - 0}{R_L}}_{\text{through } R_L} = 0,$$

where $i_d = g_m v_{gs}$.

In a common-source amplifier, the source is at AC-ground ($v_S = 0$), so:

$$v_{gs} = v_g - v_s = v_{\text{in}} - 0 = v_{\text{in}}$$

The output node is $v_D \equiv v_{\text{out}}$. Therefore:

$$g_m v_{\text{in}} + \frac{v_{\text{out}}}{r_o} + \frac{v_{\text{out}}}{R_L} = 0.$$

26.2 Solving for $v_{\mathbf{out}}/v_{\mathbf{in}}$

Factor out v_{out}:

$$g_m v_{\text{in}} + v_{\text{out}} \left(\frac{1}{r_o} + \frac{1}{R_L} \right) = 0 \implies v_{\text{out}} = -\frac{g_m v_{\text{in}}}{\frac{1}{r_o} + \frac{1}{R_L}}.$$

Combine denominators:

$$\frac{1}{r_o} + \frac{1}{R_L} = \frac{R_L + r_o}{r_o R_L},$$

so:

$$v_{\text{out}} = -g_m v_{\text{in}} \frac{r_o R_L}{R_L + r_o} \implies A_V = \frac{v_{\text{out}}}{v_{\text{in}}} = -g_m (r_o \parallel R_L).$$

In other words:

$$A_V = -g_m (r_o \parallel R_L) = -\frac{g_m}{\frac{1}{r_o} + \frac{1}{R_L}} = -\frac{g_m}{g_d + \frac{1}{R_L}}.$$

26.3 Key Limits

- If $r_o \gg R_L$ (i.e., $g_d \ll 1/R_L$), then $r_o \parallel R_L \approx R_L$, so:

$$A_V \approx -g_m R_L.$$

- If $r_o \ll R_L$, then $r_o \parallel R_L \approx r_o$, so:

$$A_V \approx -g_m r_o = -\frac{g_m}{g_d} = -A_{\text{intrinsic}}.$$

In general, the exact small-signal gain is $-g_m (r_o \parallel R_L)$.

26.4 Interpretation

- The minus sign means the output is 180° out of phase (as expected in a common-source amplifier).
- The magnitude is governed by:
  - The transconductance g_m
  - How much current can develop voltage across the net drain impedance ($r_o \parallel R_L$)

---

27 Which Set of Curves is Best for V_{th}?

- The *Dirac voltage* V_{th} of an *unbiased* GFET is the gate-voltage at which I_D is minimal (the "dip" in the transfer characteristic), under a small fixed V_{DS}.
- In contrast, the output characteristic (I_D vs. V_{DS} at various V_{GS}) does not directly exhibit that "Dirac-dip" in terms of a gate axis: it shows how I_D saturates vs. V_{DS}. One would need to inspect multiple output curves at different V_{GS} and find where they cross zero, which is much less direct.
- Therefore, *the transfer curves* (I_D vs. V_{GS}, for fixed small V_{DS}) are **far more suitable** for pinpointing the Dirac voltage. One simply locates the horizontal position of the minimum-current point.

28 Why All of This Matters

28.1 Finite V_{DS} Shifts Transfer Curves

As your lecture notes emphasize, when V_{DS} is not negligible, the entire transfer curve $I_D(V_{GS})$ shifts to the right by $\frac{V_{DS}}{2}$. In our bias design, since we intend $V_{DS,Q} = 0.8\,\text{V}$, we must make sure we look at the transfer curve measured (or simulated) at $0.8\,\text{V}$, not at $20\,\text{mV}$.

28.2 Load Line & Static Operating Point

Your notes on "Static Voltage Transfer Characteristics" and on the "operating point moving along the VTC" emphasize the graphical method:

- On a plot of V_{GS} vs. V_{DS} (for some fixed R_L, V_{DD}), the intersection is Q.
- Alternatively (and more common), on separate transfer and output plots, one marks Q as described above.

28.3 Importance of Saturation for Gain

As you noted, GFETs lack a bandgap, so they do not exhibit a "hard saturation" like a long-channel silicon MOSFET. Instead, beyond $V_{DS} = V_{GS} - V_{th}$, they enter quasi-saturation.

Because of that, g_d remains relatively large (i.e. r_o stays small). Consequently, the intrinsic gain g_m/g_d is intrinsically limited. If one wants high analog gain, one must push the device into regimes of high carrier mobility (or use load techniques that boost output impedance).

28.4 Interpreting the Curves

When you mark Q at $V_{DS} = 0.8\,\mathrm{V}$, ask yourself:

- Is that in the "nearly linear (ohmic)" portion?
- Or in the "quasi-saturation" portion of the output curve?
- If you choose V_{DS} too small, you won't be in saturation and gain will be limited by channel resistance.
- If you choose V_{DS} too large, you might be in "superohmic" (hole-accumulation) region, where the device's transconductance behavior changes.

Thus, 0.8 V is often chosen as a compromise—deep enough to show some nonlinearity, but not so large that you enter hole-accumulation heavily.

28.5 Graphical vs. Analytical

Your notes recommend:

- A **graphical approach** (static voltage transfer characteristic + load line) to visualize how Q moves when v_{in} swings about its DC value.
- But once Q is settled, the **small-signal analytical formula** (as derived above) takes over to give the slope (gain).

---

29 High-Frequency Small-Signal Models of a GFET

29.1 Extrinsic AC Small-Signal Circuit Model

At high frequencies, a GFET's extrinsic small-signal equivalent (in hybrid-π style) includes both the intrinsic device elements and parasitic components arising from contacts and interconnects. In lieu of a figure, we describe the topology as follows:

- **Gate Node:**

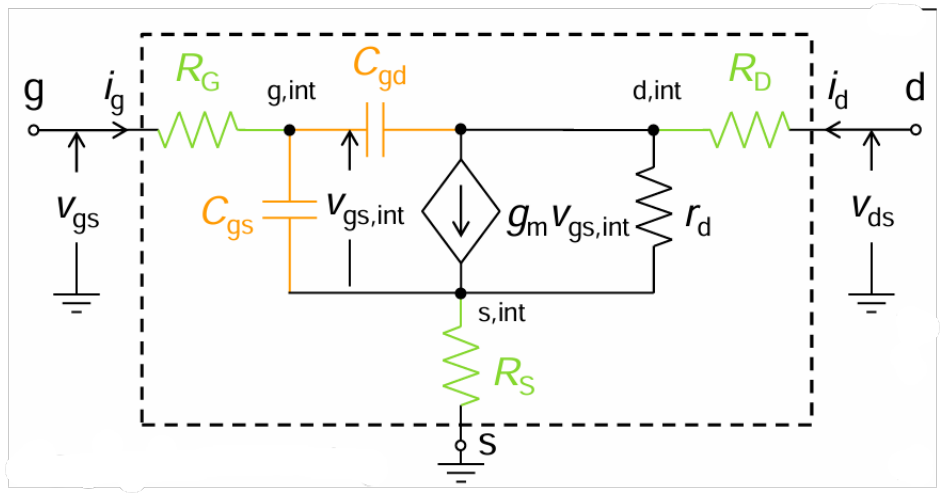

- A series *gate resistance* R_G from the external gate terminal to the intrinsic gate node.
- From the intrinsic gate node to the intrinsic source node, a capacitance C_{GS}.
- From the intrinsic gate node to the intrinsic drain node, a capacitance C_{GD}.
- (Optionally, if quantum capacitance is considered nonnegligible, it would appear as a small extra capacitance in series with C_{GS}, but we neglect that here.)

- **Intrinsic Gate-Source Node:**
  - This node is the "gate" of the intrinsic FET. Its voltage relative to the intrinsic source is v_{gs}.
  - It drives the intrinsic transconductance device $g_m\, v_{gs}$.

- **Intrinsic Drain Node:**
  - Connected to the intrinsic drain, is:
    * A controlled current source of value $i_m = g_m\, v_{gs}$, oriented from drain $\rightarrow$ source.
    * A drain-source output conductance g_d in parallel with any intrinsic drain-source capacitance C_{DS} between the intrinsic drain and intrinsic source. (If C_{DS} is negligible in GFETs, it can be omitted or combined with C_{GD} in certain approximations.)
    * From the intrinsic drain to the external drain terminal, a series *drain resistance* R_D.
    * From that external drain terminal, a shunt *load resistance* R_L to AC ground (i.e. the DC supply V_{DD} is treated as an AC short).

- **Intrinsic Source Node:**
  - The intrinsic source is usually tied to the external source terminal through a series *source resistance* R_S.

– From the external source terminal to AC ground, there may be an inductance L_S at very high frequencies, but often one assumes the external source node is already at RF ground (particularly if source-degeneration is bypassed).

Thus, the full extrinsic HF model consists of:

$$R_G - \big[C_{GS} \parallel C_{GD} \text{ to intrinsic nodes}\big] - g_m\, v_{gs} \text{ (drain}\rightarrow\text{source)} \parallel g_d + C_{DS} \quad \text{in the intrinsic core}$$

with series resistances R_S, R_D at the source and drain, respectively, and a load R_L from the external drain to AC ground.

Remark: At very high frequencies, the gate-resistance R_G and any interconnect inductances L_G, L_S, L_D will also appear, but for clarity we show only resistances and capacitances here.

29.2 Intrinsic High-Frequency Model and Y-Parameters

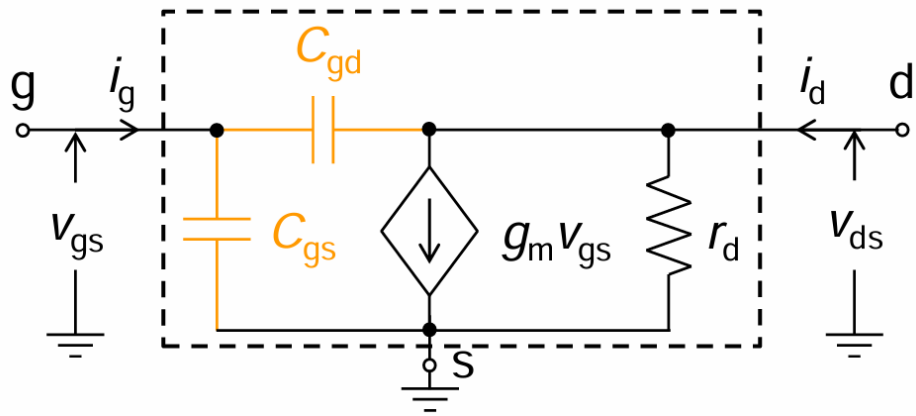

Simplified Intrinsic High-Frequency Model

To obtain the intrinsic HF model, remove the extrinsic parasitics:

$$R_G,\ R_S,\ R_D \longrightarrow 0, \quad R_L \text{ is external to the device.}$$

What remains in the intrinsic core is:

- A *gate-source capacitance* C_{GS} between the intrinsic gate and intrinsic source.
- A *gate-drain capacitance* C_{GD} between the intrinsic gate and intrinsic drain.
- (Optionally) a small intrinsic *drain-source capacitance* C_{DS} between intrinsic drain and intrinsic source.
- A transconductance-dependent current source $i_m = g_m\, v_{gs}$, from intrinsic drain to intrinsic source.

- An output conductance g_d (often denoted as g_{ds}) between intrinsic drain and intrinsic source.
- The intrinsic source node is taken as the reference (AC ground) in most two-port formulations.

By representing resistors, capacitors, and inductors with their respective impedances, we can analyze the circuit using algebraic equations instead of differential equations. The steps are as follows:

1. Replace all resistors, capacitors, and inductors with their impedances.
2. Apply Kirchhoff's voltage and current laws in the frequency domain.
3. Solve the resulting system of linear equations for the desired voltages and currents.
4. If needed, apply the inverse Fourier transform to return to the time domain.

This approach simplifies the analysis of high-frequency circuits, as it avoids the need to solve differential equations directly.
In effect, the intrinsic two-port looks like 1.

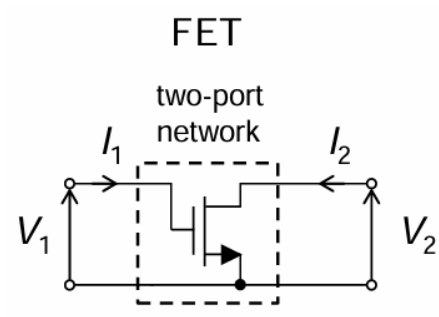

Figure 1: Two-port network

- **Port 1 (Input):** Node 1 = intrinsic gate, Node 2 = intrinsic source (AC ground). Between gate and source there is $C_{GS} \parallel C_{GD}$ (with the other plate of C_{GD} going to drain).
- **Port 2 (Output):** Node 3 = intrinsic drain, Node 2 = intrinsic source (AC ground). Between drain and source there is:

  $$g_d \quad \text{(conductance)} \quad \text{in parallel with} \quad C_{DS}\,,$$

  and the dependent source $g_m\, v_{gs}$ feeding from drain $\rightarrow$ source.

Since the intrinsic source is at AC ground, we define:

$V_1 \;=\; V_{GS}$ (intrinsic gate—source voltage), $\qquad V_2 \;=\; V_{DS}$ (intrinsic drain—source voltage).

The corresponding small-signal currents into each port (with the other port's voltage held fixed) are I_1 (the gate current) and I_2 (the drain current).

Intrinsic Y-Parameter Definitions

By definition of Y-parameters (admittance parameters) in a two-port:

$$I_1 = Y_{11}\,V_1 \;+\; Y_{12}\,V_2,$$
$$I_2 = Y_{21}\,V_1 \;+\; Y_{22}\,V_2,$$

where:

- I_1 is the small-signal gate current into the gate node (intrinsic gate).
- I_2 is the small-signal drain current into the drain node (intrinsic drain).
- $V_1 = V_{GS}$ is the gate–source voltage.
- $V_2 = V_{DS}$ is the drain–source voltage.

One could even use the impedance parameters:

$$\begin{bmatrix} V_1 \\ V_2 \end{bmatrix} = \begin{bmatrix} Z_{11} & Z_{12} \\ Z_{21} & Z_{22} \end{bmatrix} \begin{bmatrix} I_1 \\ I_2 \end{bmatrix}$$

Or even the hybrid parameters:

$$\begin{bmatrix} V_1 \\ I_2 \end{bmatrix} = \begin{bmatrix} H_{11} & H_{12} \\ H_{21} & H_{22} \end{bmatrix} \begin{bmatrix} I_1 \\ V_2 \end{bmatrix}$$

These relations are possible in case of small signals.

We now determine each Y_{ij} by "turning off" the appropriate port voltage and computing the current into the other port.

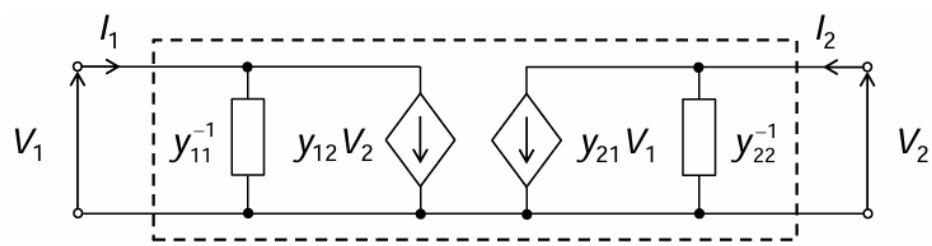

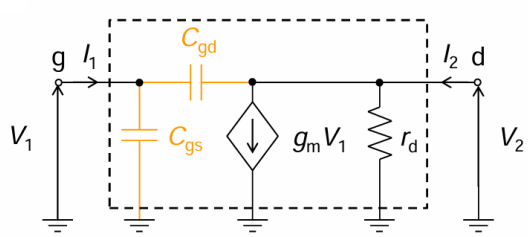

$$y_{11} = \left.\frac{I_1}{V_1}\right|_{V_2=0} \qquad y_{21} = \left.\frac{I_2}{V_1}\right|_{V_2=0}$$

$$y_{12} = \left.\frac{I_1}{V_2}\right|_{V_1=0} \qquad y_{22} = \left.\frac{I_2}{V_2}\right|_{V_1=0}$$

$V_2 = 0$

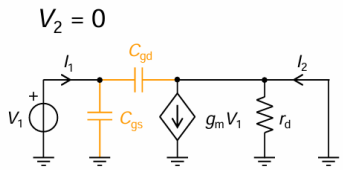

$V_1 = 0$

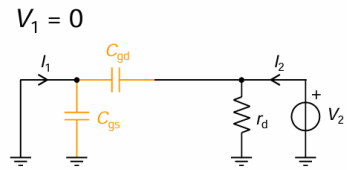

Calculation of Y_{11}. Set $V_2 = 0$ (short-circuit the intrinsic drain to intrinsic source). Under that condition:

$$v_{ds} = V_2 = 0, \quad v_{gs} = V_1.$$

The gate node sees capacitances C_{GS} to ground (source) and C_{GD} to drain, but since drain = source = AC ground, both capacitances appear in parallel from gate to ground. There is no DC conductance from gate to source (since $i_g = 0$ intrinsically), so:

$$Y_{11} \;=\; j\omega\big(C_{GS} + C_{GD}\big).$$

This is because r_d and $g_m V_1$ are grounded, thus the equivalent admittance that I_1 sees it is the above one.

Calculation of Y_{12}. Set $V_1 = 0$ (short-circuit the gate to source). Then $v_{gs} = 0$. We apply a small V_2 at the intrinsic drain while the gate is grounded. The only current flowing into the gate node must come through C_{GD} (from drain to gate), with drain excited by V_2. Because the gate-source node is at RF ground, that current is:

$$I_1 = j\omega\, C_{GD}\,\big(V_{\text{drain}} - V_{\text{gate}}\big) = j\omega\, C_{GD}\,(V_2 - 0).$$

However, by sign convention, a positive V_2 (drain positive) pushes a displacement current *out* of the gate node toward drain. The Y-parameter definition uses the current flowing *into* port-1. That is

$$I_1 = -\,j\omega\, C_{GD}\, V_2 \qquad \text{(gate current toward the gate node when } V_1 = 0\text{)}.$$

Hence,

$$Y_{12} \;=\; \frac{I_1}{V_2}\Big|_{V_1=0} \;=\; -\,j\omega\, C_{GD}.$$

This is obtained because r_d is in parallel with C_{gd}, but we are interested in the current flowing in the latter.

Calculation of Y_{21}. Set $V_2 = 0$. Then $v_{ds} = 0$ and $v_{gs} = V_1$. The small-signal drain current consists of two terms:

$$i_2 = i_d \;=\; g_m\, v_{gs} \;+\; g_d\, v_{ds} \;+\; j\omega\, C_{GD}\,\big(V_{\text{gate}} - V_{\text{drain}}\big).$$

Since $v_{ds} = V_2 = 0$, and $v_{gs} = V_1$, and $V_{\text{drain}} = V_2 = 0$, the displacement current through C_{GD} flows from drain to gate when $v_{gs} \neq 0$. But we want the total current entering the drain node:

$$I_2 = g_m\, V_1 \;+\; g_d \cdot 0 \;+\; j\omega\, C_{GD}\,\big(0 - V_1\big) = g_m\, V_1 \;-\; j\omega\, C_{GD}\, V_1.$$

Therefore,

$$Y_{21} \;=\; \frac{I_2}{V_1}\Big|_{V_2=0} \;=\; g_m \;-\; j\omega\, C_{GD}.$$

Calculation of Y_{22}. Set $V_1 = 0$. Then $v_{gs} = 0$, $v_{ds} = V_2$. The drain current into the intrinsic drain node has two contributions:

$$i_2 = g_m\, v_{gs} \;+\; g_d\, v_{ds} \;+\; j\omega\, C_{GD}\left(V_{\text{gate}} - V_{\text{drain}}\right) \;+\; j\omega\, C_{DS}\left(V_{\text{drain}} - V_{\text{source}}\right).$$

Since $v_{gs} = 0$ (thus the transconductance term vanishes) and $V_{\text{gate}} = 0$, this reduces to:

$$I_2 = g_d\, V_2 \;+\; j\omega\, C_{GD}\left(0 - V_2\right) \;+\; j\omega\, C_{DS}\left(V_2 - 0\right) = g_d\, V_2 \;-\; j\omega\, C_{GD}\, V_2 \;+\; j\omega\, C_{DS}\, V_2.$$

Combining signs carefully (currents defined into port-2 as positive):

$$I_2 = \left[g_d + j\omega\left(C_{DS} + C_{GD}\right)\right] V_2,$$

so

$$Y_{22} = g_d \;+\; j\omega\left(C_{DS} + C_{GD}\right).$$

In many simplified GFET analyses, C_{DS} is quite small compared to C_{GD} and C_{GS} and can be omitted. If C_{DS} is omitted entirely, then:

$$Y_{22} \;=\; g_d \;+\; j\omega\, C_{GD}.$$

We can find Y_{22} also seeing that I_2 sees the admittance given by $C_{gd}//r_d$.

Once the Y-parameters are known, other parameter sets (e.g., Z-parameters, H-parameters) can be derived:

1. Z-Parameters: The impedance matrix $\mathbf{Z}$ is the inverse of the admittance matrix $\mathbf{Y}$:

$$\mathbf{Z} = \mathbf{Y}^{-1}$$

2. H-Parameters: The hybrid parameters can be derived from the Y-parameters. For example:

$$H_{11} = \frac{1}{Y_{11}}$$
$$H_{21} = \frac{Y_{21}}{Y_{11}}$$

The hybrid parameter H_{21} is particularly important as it represents the short-circuit current gain:

$$H_{21} = \left.\frac{I_2}{I_1}\right|_{V_2=0}$$

For the extrinsic FET, the Y-parameters are modified to include the effects of R_G, R_S, and R_D. The extrinsic Y-parameters can be derived using the following steps:

1. Convert Intrinsic Y-Parameters to Z-Parameters:

$$\mathbf{Z}_{\text{int}} = \mathbf{Y}_{\text{int}}^{-1}$$

2. Add Parasitic Resistances: The extrinsic Z-parameters are obtained by adding the parasitic resistances to the intrinsic Z-parameters:

$$\mathbf{Z}_{\text{ext}} = \mathbf{Z}_{\text{int}} + \begin{bmatrix} R_G + R_S & R_S \\ R_S & R_S + R_D \end{bmatrix}$$

3. Convert Extrinsic Z-Parameters to Y-Parameters: Finally, the extrinsic Y-parameters are obtained by inverting the extrinsic Z-parameter matrix:

$$\mathbf{Y}_{\text{ext}} = \mathbf{Z}_{\text{ext}}^{-1}$$

In practice, deriving the extrinsic Y-parameters analytically is complex due to the matrix inversions and the inclusion of parasitic resistances. Instead, numerical methods or circuit simulation tools (e.g., SPICE) are used to compute the Y-parameters for the extrinsic FET.

29.3 Intrinsic Short-Circuit Current Gain h_{21}

The intrinsic (short-circuit) current gain h_{21} is defined as the ratio of the drain current (port-2 current) to the gate current (port-1 current) under short-circuit output conditions ($V_2 = 0$). In terms of Y-parameters:

$$h_{21} \;=\; \left.\frac{I_2}{I_1}\right|_{V_2=0} \;=\; \left.\frac{Y_{21}\,V_1 + Y_{22}\,V_2}{Y_{11}\,V_1 + Y_{12}\,V_2}\right|_{V_2=0} \;=\; \frac{Y_{21}}{Y_{11}} \quad (\text{since } V_2 = 0 \implies I_2 = Y_{21}V_1,\; I_1 = Y_{11}V_1).$$

Therefore,

$$h_{21} \;=\; \frac{Y_{21}}{Y_{11}} \;=\; \frac{g_m \;-\; j\omega\, C_{GD}}{j\omega\left(C_{GS} + C_{GD}\right)}.$$

If $C_{DS} \approx 0$ is assumed, the gain expression remains unchanged.
One often expresses the magnitude of $h_{21}(\omega)$ and finds the frequency at which $|h_{21}| = 1$ to determine the *unity-gain frequency* f_T.

29.3.1 Low-Frequency Limit of h_{21}

As $\omega \to 0$, the term $j\omega\, C_{GD}$ is negligible compared to g_m. Hence,

$$h_{21}(\omega \to 0) \approx \frac{g_m}{j\omega\,(C_{GS} + C_{GD})} \quad \longrightarrow \quad \infty,$$

indicating very large DC current gain (in the idealized intrinsic model). In practice, f_T is finite because g_m and the capacitances raise ω until $|h_{21}| = 1$.

29.3.2 High-Frequency Approximation

At sufficiently high ω, if $\omega C_{GD} \gg g_m$, then the numerator is dominated by $-j\omega C_{GD}$. In that regime,

$$h_{21}(\omega) \approx \frac{-\,j\omega\, C_{GD}}{j\omega\,(C_{GS} + C_{GD})} = -\,\frac{C_{GD}}{C_{GS} + C_{GD}} \quad (\text{a constant magnitude less than 1}).$$

This region corresponds to frequencies above the unity-gain cutoff. The transition between the low-frequency and high-frequency asymptotes occurs near the *intrinsic cutoff frequency* ω_T, where

$$\left|g_m\right| \;=\; \omega_T\left(C_{GS}+C_{GD}\right) \quad\Longrightarrow\quad \omega_T \;=\; \frac{g_m}{C_{GS}+C_{GD}}.$$

Equivalently in hertz:

$$f_T \;=\; \frac{\omega_T}{2\pi} \;=\; \frac{g_m}{2\pi\left(C_{GS}+C_{GD}\right)}.$$

30 Importance of $f_{\max}$ vs. f_T

- f_T: The frequency at which the short-circuit current gain becomes unity. It does not account for resistive or parasitic elements, i.e., for the output conductance $R_D\,(so\,g_d)$ due to the short-circuit output assumption. It gives us the intrinsic speed of the device but no info on the saturation effects. In the case of extrinsic f_T, still the dependence on R_G is missing, and, moreover, the dependence on g_d is still weak because in a good resistor the values of R_S, R_D, C_{gd} are small, and they multiply g_d and g_m.
  Finally, even if $f_{T,ext} \propto f_{T,intr} \propto \frac{1}{L^2}$, below a certain gate length the cut-off frequency saturates due to parasitic resistances that dominate at such low scale. f_T alone is not sufficient to describe the speed of the device.

- $f_{\max}$: The frequency at which power gain becomes unity, accounting for resistive effects such as gate resistance R_G. It represents the highest frequency where the transistor can still provide power amplification. It will be described better later

31 Unilateral Power Gain

First of all, we have to remember that there is no way to find exactly $f_{T,ext}$, thus we invoke the Miller's theorem to obtain a simplified, equivalent, and solvable circuit. At the end of the process, we should obtain $h_{21_{ext}}(f)$, and by setting $|h_{21_{ext}}| = 1$, we can solve for $f_{T_{ext}}$. It has the limitations cited before (no R_G dependence).
To retrieve more info about the speed of the device, we have to consider the realistic setup in 2. The realistic circuit includes:

1. Input Circuit: A voltage generator with an input admittance Y_{in}. This represents the realistic input impedance of the generator.

2. Two-Port Network: The transistor (e.g., a FET) modeled as a two-port network.

3. Output Circuit: A load admittance Y_L, representing the realistic load connected to the output.

The power gain G_P is defined as the ratio of the power delivered to the load P_2 to the power delivered to the network P_1:

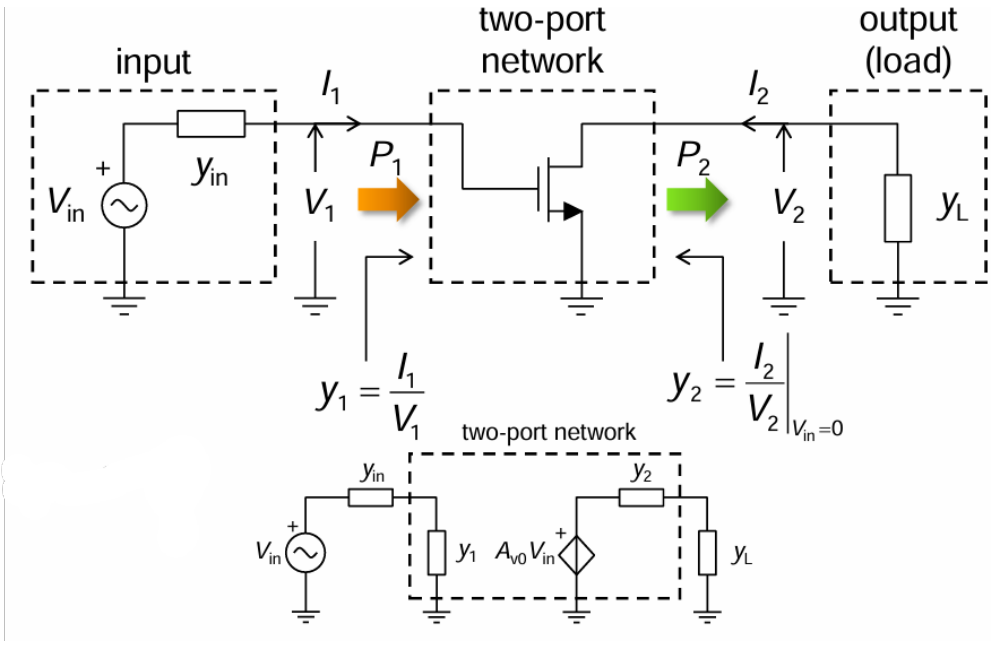

Figure 2: Realistic GFET setup.

$$G_P = \frac{P_2}{P_1}$$

Here, P_1 is the active power delivered to the two-port network, and P_2 is the active power delivered to the load. Both P_1 and P_2 are real numbers, as we are interested in the active (useful) power.

Leveraging on the **maximum transfer power theorem**, we optimize the values of the admittances. This theorem is a fundamental concept in electrical engineering that describes the condition under which maximum power is transferred from a source to a load. This is done by deriving the power w.r.t. the imaginary part of the load impedance, and then derive the power about the real part, substituting the previously found value of its imaginary part. Of course, the circuit that we have to considered is obtained by applying Thevenin's theorem.

Unfortunately, the result would be a condition where the real part of the admittance in the two-port network is zero, but this is not satisfied if there is even a single effective resistor there. We need to neglect the coupled terms, decoupling the equations obtained (the ones of the input and load admittances), then **by setting** $y'_{12} = 0$ (it is the one of the modified network, controlled by adding feedback admittances Y_F and Y_A), we get the so-called **unilateral circuit**. The system of equations is now easy to solve.

In a sense, we get the power transfer of a modified network, that is the reason why we represent it as G' and not G. Under the followed assumptions, we get:

$$G' = \frac{|y'_{21}|^2}{4\left(\mathrm{Re}(y'_{11})\,\mathrm{Re}(y_{22})'\right)} = \frac{|y'_{21}|^2}{4g'_{11}g'_{22}}$$

As $|h_{21}(f)|$, also $G'(f)$ decreases by increasing the frequency. We define:

$$f_{max} = \text{frequency where } G'(f) = 1 \text{ (0 dB)}$$

Key features are:

- Active vs. Passive Operation: At frequencies below $f_{\max}$, the transistor acts as an active component capable of amplifying power. At frequencies above $f_{\max}$, the transistor becomes passive and cannot amplify power.
- Realistic Circuit Analysis: Unlike the cutoff frequency f_T, which is derived from an unrealistic circuit (perfect current generator at the input and short circuit at the output), $f_{\max}$ is derived from a realistic circuit with proper input and output impedances. This makes $f_{\max}$ a more practical and useful metric for high-frequency performance.

The intrinsic transistor model is overly idealized and does not account for several real-world effects, such as:

1. Input Resistance: The input admittance y'_{11} is purely imaginary, implying no resistive losses at the input. In reality, there is always some resistive component due to parasitic resistances and other non-idealities.
2. Feedback Capacitance: The intrinsic model assumes perfect cancellation of C_{gd} using a negative capacitor, which is not physically realizable.
3. Output Conductance: The output conductance g_d is assumed to be constant, but in reality, it can vary with frequency and bias conditions.

To obtain realistic values, we need to use a more accurate transistor model that includes:

1. Parasitic Resistances: Account for resistive losses at the input and output.
2. Realistic Feedback: Replace the idealized negative capacitor with a physically realizable circuit, such as a gyrator-based active circuit.
3. Frequency-Dependent Parameters: Include frequency-dependent effects in the transistor model.

From the unilateralization process, we have relationships about:

- Input Admittance y'_{11}
- Forward Transfer Admittance y'_{21}
- Output Admittance y'_{22}
- Feedback Admittance Y_F
- Admittance Y_A

By solving these equations, we can express y'_{11}, y'_{21}, and y'_{22} in terms of the original Y-parameters y_{11}, y_{12}, y_{21}, and y_{22}, and thus obtain the unilateral power gain expression:

$$G' = \frac{|y_{21} - y_{12}|^2}{4\left(\mathrm{Re}(y_{11})\,\mathrm{Re}(y_{22}) - \mathrm{Re}(y_{12})\,\mathrm{Re}(y_{21})\right)} \approx \frac{g_m^2}{4\omega^2 R_G C_G^2 g_d}$$

Pros are:

- No Physical Modification: There is no need to physically modify the circuit by adding feedback admittances Y_F and Y_A.
- Simplified Measurement: The unilateral power gain can be calculated directly from the original Y-parameters, simplifying the measurement process.
- Realistic Results: This approach provides realistic results without relying on idealized assumptions or physically unrealizable components.

We define the maximum frequency of oscillation $f_{\max}$ as the frequency at which $G' = 1$. Solving:

$$1 = \frac{g_m^2}{4\omega^2 R_G C_G^2 g_d} \quad \rightarrow \quad \omega_{\max} = \frac{g_m}{2\sqrt{R_G g_d} C_G}$$

$$\Longrightarrow \quad f_{\max} = \frac{\omega_{\max}}{2\pi} = \frac{g_m}{4\pi C_G \sqrt{R_G g_d}}$$

This is the desired expression for $f_{\max}$ in the semi-intrinsic case, where R_G is the only extrinsic parameter included.

32 Semi-Extrinsic Derivation: the Hard and Easy Ways

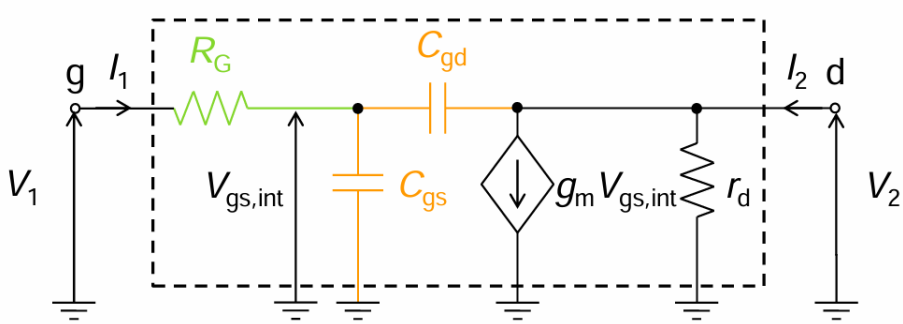

The semi-extrinsic FET model includes the gate resistance R_g in addition to the intrinsic capacitances C_{gs} and C_{gd}.

32.1 The Hard (Complete) Way

The goal is to derive all four admittance (Y-parameter) elements

$$y_{11} = \left.\frac{I_1}{V_1}\right|_{V_2=0}, \quad y_{12} = \left.\frac{I_1}{V_2}\right|_{V_1=0}, \quad y_{21} = \left.\frac{I_2}{V_1}\right|_{V_2=0}, \quad y_{22} = \left.\frac{I_2}{V_2}\right|_{V_1=0},$$

by enforcing Kirchhoff's laws and the definitions of small-signal currents and voltages. We follow a systematic nodal analysis, justifying each step.

Nodes and Elements:

- V_1 is the small-signal voltage at the external gate terminal (port 1). The small-signal gate current into port 1 is I_1.
- V_2 is the small-signal voltage at the external drain terminal (port 2). The small-signal drain current into port 2 is I_2.
- The gate terminal sees a series resistor R_G. The node immediately to the right of R_G is the internal gate node; we call its voltage V_x.
- Between the internal gate node and the source (ground) there is a capacitance C_{gs}. Between the internal gate node and the drain node there is a capacitance C_{gd}.
- The controlled source from gate–source to drain produces a current $g_m V_{gs,\text{int}}$ from drain to source (downward), where

$$V_{gs,\text{int}} = V_x - 0 = V_x.$$

- The drain node is also loaded by the small-signal output resistance r_d to ground.

By definition, the Y-parameter matrix relates port voltages (V_1, V_2) to port currents (I_1, I_2). In particular:

$$y_{11} = \left.\frac{I_1}{V_1}\right|_{V_2=0}, \qquad y_{12} = \left.\frac{I_1}{V_2}\right|_{V_1=0}, \tag{20}$$

$$y_{21} = \left.\frac{I_2}{V_1}\right|_{V_2=0}, \qquad y_{22} = \left.\frac{I_2}{V_2}\right|_{V_1=0}. \tag{21}$$

To compute each element, we impose the appropriate port voltage(s) and ground the other port(s), then find the resulting currents I_1 and I_2. In every case, the source node of the transistor is tied to ground (common reference).

Remark: In all four calculations, the internal gate-to-source voltage is

$$V_{gs,\text{int}} = V_x - 0 = V_x,$$

since the source is at AC-ground. We only ever need V_x when solving nodal equations at the internal gate node.

For $y_{11} = I_1/V_1\big|_{V_2=0}$:

- We impose $V_1 \neq 0$ at port 1 (gate), and force $V_2 = 0$ at port 2 (drain) by grounding the external drain.

- The source is already grounded by definition.

- The internal gate node (to the right of R_G) we call V_x. Since $V_2 = 0$, the drain node is at 0 as well.

At node V_x, three elements connect:

- A resistor R_G comes from the external gate node at voltage V_1. The current flowing from V_1 into V_x is
$$\frac{V_1 - V_x}{R_G}.$$
- A capacitor C_{gs} to ground (source), drawing current
$$j\omega\, C_{gs}\, V_x \quad \text{(downward to ground)}.$$
- A capacitor C_{gd} to the drain node. Since $V_2 = 0$, the drain is at ground as well, so the current is
$$j\omega\, C_{gd}\, V_x \quad \text{(also downward to ground)}.$$

By Kirchhoff's Current Law (KCL) at node V_x, the sum of currents leaving the node must be zero. Equivalently, the algebraic sum of currents *entering* must be zero. We choose "entering" as positive. Thus:

$$\underbrace{\frac{V_1 - V_x}{R_G}}_{\text{From } V_1 \text{ into } V_x} \;-\; \underbrace{\big(j\omega\, C_{gs}\big)\, V_x}_{\text{From } V_x \text{ into source}} \;-\; \underbrace{\big(j\omega\, C_{gd}\big)\, V_x}_{\text{From } V_x \text{ into drain}} \;=\; 0.$$

Rearrange:
$$\frac{V_1 - V_x}{R_G} \;=\; \big(j\omega\, C_{gs} + j\omega\, C_{gd}\big)\, V_x \;=\; j\omega\,(C_{gs} + C_{gd})\, V_x. \tag{22}$$

From (22), multiply both sides by R_G:

$$V_1 - V_x \;=\; R_G\, j\omega\,(C_{gs} + C_{gd})\, V_x.$$

Hence
$$V_1 \;=\; V_x \;+\; R_G\, j\omega\,(C_{gs} + C_{gd})\, V_x \;=\; V_x \Big[1 + j\omega\, R_G\,(C_{gs} + C_{gd})\Big].$$

Therefore,
$$V_x \;=\; \frac{V_1}{1 + j\,\omega\, R_G\,(C_{gs} + C_{gd})}. \tag{23}$$

I_1 is defined as the current entering the device at the external gate terminal. It flows through R_G into node V_x. Hence,
$$I_1 \;=\; \frac{V_1 - V_x}{R_G}.$$

Substitute V_x from (23):

$$I_1 \;=\; \frac{V_1 \;-\; \frac{V_1}{1+j\omega R_G(C_{gs}+C_{gd})}}{R_G} \;=\; \frac{V_1}{R_G}\left[1 \;-\; \frac{1}{1+j\omega R_G(C_{gs}+C_{gd})}\right].$$

Compute the bracketed term:

$$1 \;-\; \frac{1}{1+j\omega R_G(C_{gs}+C_{gd})} \;=\; \frac{\big[1+j\omega R_G(C_{gs}+C_{gd})\big]-1}{1+j\omega R_G(C_{gs}+C_{gd})} \;=\; \frac{j\omega\, R_G\,(C_{gs}+C_{gd})}{1+j\omega R_G(C_{gs}+C_{gd})}.$$

Hence

$$I_1 \;=\; \frac{V_1}{R_G}\;\cdot\;\frac{j\omega\, R_G\,(C_{gs}+C_{gd})}{1+j\omega R_G(C_{gs}+C_{gd})} \;=\; V_1\,\frac{j\omega\,\big(C_{gs}+C_{gd}\big)}{1+j\omega\, R_G\,\big(C_{gs}+C_{gd}\big)}.$$

Finally, by definition,

$$\boxed{y_{11} \;=\; \left.\frac{I_1}{V_1}\right|_{V_2=0} \;=\; \frac{j\omega\,\big(C_{gs}+C_{gd}\big)}{1+j\omega\, R_G\,\big(C_{gs}+C_{gd}\big)}}$$

To capture the real (conductance) part at high frequency, one can expand:

$$\frac{1}{1+jX} \;=\; \frac{1-jX}{1+X^2}, \quad X=\omega\, R_G(C_{gs}+C_{gd}).$$

Hence

$$y_{11} \;=\; j\omega\,(C_{gs}+C_{gd})\,\frac{1-j\,X}{1+X^2} \;=\; \underbrace{\frac{\omega^2\, R_G\,(C_{gs}+C_{gd})^2}{1+\big[\omega\, R_G(C_{gs}+C_{gd})\big]^2}}_{\mathrm{Re}\{y_{11}\}} \;+\; j\;\underbrace{\frac{\omega\,(C_{gs}+C_{gd})}{1+\big[\omega\, R_G(C_{gs}+C_{gd})\big]^2}}_{\mathrm{Im}\{y_{11}\}}.$$

Practically, one often considers $\omega\, R_G(C_{gs}+C_{gd}) \ll 1$, so that:

$$\mathrm{Re}(y_{11}) \approx \omega^2\, R_G\,(C_{gs}+C_{gd})^2, \qquad \mathrm{Im}(y_{11}) \approx \omega\,(C_{gs}+C_{gd}).$$

And thus:

$$\boxed{y_{11} \approx \omega^2\, R_G\,(C_{gs}+C_{gd})^2 + j\omega\,(C_{gs}+C_{gd})}$$

For $y_{12} = I_1/V_2\big|_{V_1=0}$:

- We now set $V_1 = 0$, i.e. the external gate terminal is grounded.
- We impose $V_2 \neq 0$ at the external drain terminal (port 2). The source remains grounded.
- The drain node is therefore at $V_d = V_2$. The internal gate node voltage is V_x.

At node V_x, three connections exist:

- From the external gate source: R_G connects from $V_1 = 0$ to V_x. Thus a current

$$\frac{0-V_x}{R_G} \;=\; -\,\frac{V_x}{R_G}$$

enters V_x if $V_x < 0$. (We keep sign conventions carefully below.)

- A capacitor C_{gs} to ground, drawing current $j\omega\, C_{gs}\, V_x$ downward.
- A capacitor C_{gd} to the drain node at $V_d = V_2$, carrying current

$$j\omega\, C_{gd}\left(V_x - V_2\right) \quad \text{(from gate node toward drain node).}$$

KCL at V_x: sum of currents leaving the node is zero. We choose currents *entering* V_x as positive. Then

$$\underbrace{\frac{0 - V_x}{R_G}}_{\text{From gate supply}} + \underbrace{j\omega\, C_{gd}\,(V_2 - V_x)}_{\text{From drain}} - \underbrace{j\omega\, C_{gs}\, V_x}_{\text{To source}} = 0.$$

Rewrite step by step:

1. Current from R_G:

$$I_{RG} = \frac{V_1 - V_x}{R_G} = \frac{0 - V_x}{R_G} = -\frac{V_x}{R_G}.$$

2. Current through C_{gd} from V_2 into node V_x:

$$I_{C_{gd}} = j\omega\, C_{gd}\left(V_2 - V_x\right).$$

3. Current through C_{gs} *leaving* node V_x (to ground):

$$I_{C_{gs}} = j\omega\, C_{gs}\left(V_x - 0\right) = j\omega\, C_{gs}\, V_x.$$

Applying KCL (sum of currents entering V_x equals sum leaving):

$$\left(-\frac{V_x}{R_G}\right) + \left[j\omega\, C_{gd}\,(V_2 - V_x)\right] - \left[j\omega\, C_{gs}\, V_x\right] = 0.$$

Collect terms:

$$-\frac{V_x}{R_G} + j\omega\, C_{gd}\, V_2 - j\omega\, C_{gd}\, V_x - j\omega\, C_{gs}\, V_x = 0,$$

$$\Longrightarrow j\omega\, C_{gd}\, V_2 = \frac{V_x}{R_G} + j\omega\left(C_{gd} + C_{gs}\right) V_x.$$

Factor V_x on the right:

$$j\omega\, C_{gd}\, V_2 = V_x\left[\tfrac{1}{R_G} + j\omega\,(C_{gs} + C_{gd})\right].$$

Hence

$$V_x = \frac{j\omega\, C_{gd}\, V_2}{\frac{1}{R_G} + j\omega\,(C_{gs} + C_{gd})} = \frac{j\omega\, R_G\, C_{gd}}{1 + j\omega\, R_G\,(C_{gs} + C_{gd})}\, V_2.$$

When $V_1 = 0$, the current I_1 at the external gate terminal is simply the current through R_G into the internal node V_x. That is,

$$I_1 = \frac{V_1 - V_x}{R_G} = \frac{0 - V_x}{R_G} = -\frac{V_x}{R_G}.$$

Substitute V_x from (32.1):

$$I_1 \;=\; -\,\frac{1}{R_G}\Big[\,\frac{j\omega\, R_G\, C_{gd}}{1+j\omega\, R_G\,(C_{gs}+C_{gd})}\,V_2\Big] \;=\; -\,\frac{j\omega\, C_{gd}}{1+j\omega\, R_G\,(C_{gs}+C_{gd})}\,V_2.$$

By definition,

$$\boxed{y_{12} \;=\; \frac{I_1}{V_2}\bigg|_{V_1=0} \;=\; -\,\frac{j\omega\, C_{gd}}{1+j\omega\, R_G\,(C_{gs}+C_{gd})}}$$

Hence:

$$y_{12} = \frac{\omega^2 C_{gd} R_G (C_{gd}+C_{gs})}{1+\omega^2 R_G^2 (C_{gd}+C_{gs})^2} - j\frac{\omega C_{gd}}{1+\omega^2 R_G^2 (C_{gd}+C_{gs})^2}$$

Practically, one often considers simply:

$$\boxed{y_{12} \;\approx\; -\,j\,\omega\, C_{gd} \;=\; y_{12,\text{int}}}$$

This is because in the semi-extrinsic case we only consider y_{11} affected by R_G.
For $y_{21} = I_2/V_1\big|_{V_2=0}$:

- Impose $V_1 \neq 0$ at the gate (port 1). - Set $V_2 = 0$ at the drain (port 2), i.e., drain is grounded for the test. - Source is also at ground. - We must find the drain current I_2 flowing into the device at the external drain terminal.

With $V_2 = 0$, the drain node is ground. The internal gate node voltage V_x is the same as in Section 3 (since the situation $V_1 \neq 0,\ V_2 = 0$ is identical to that used to find y_{11}). In particular,

$$V_x \;=\; \frac{V_1}{1+j\omega\, R_G\,(C_{gs}+C_{gd})}, \qquad V_{gs,\text{int}} = V_x.$$

The gate–source node sees V_x above ground.

At the drain node (external port 2), two elements connect to ground: the output resistance r_d and the controlled source $g_m\, V_{gs,\text{int}}$ (which injects current pointing from drain node downward into ground). Conventions:

- The current through r_d from drain node to ground is

$$\frac{V_d - 0}{r_d} = \frac{0-0}{r_d} = 0 \quad (\text{since } V_d = 0).$$

- The controlled source produces a current of $g_m\, V_{gs,\text{int}}$ flowing from the drain node down to ground. If $V_{gs,\text{int}} > 0$, it pulls current out of the drain (i.e. into the device).

Since $V_2 = V_d = 0$, the only nonzero drain current is the controlled-source current. By passive-sign convention, the current I_2 entering port 2 is

$$I_2 \;=\; g_m\, V_{gs,\text{int}} \;=\; g_m\Big(\frac{V_1}{1+j\omega\, R_G(C_{gs}+C_{gd})}\Big).$$

Hence

$$y_{21} \;=\; \frac{I_2}{V_1}\bigg|_{V_2=0} \;=\; \frac{g_m}{1+j\,\omega\, R_G\,(C_{gs}+C_{gd})}.$$

However, one must not forget that in reality there is also a feedback path through the C_{gd} capacitor: when V_x changes, some part of that change also modulates the drain node. A more rigorous derivation includes the small leakage through C_{gd} and yields:

$$\boxed{y_{21} \;=\; \frac{g_m \;-\; j\omega\, C_{gd}}{1 + j\omega\, R_G\,(C_{gs} + C_{gd})}}$$

To see this, note that if $V_d = 0$, then the total current flowing out of the drain node is

$$I_2 \;=\; g_m\, V_x \;+\; j\omega\, C_{gd}\,\big(V_x - V_d\big) \;=\; g_m\, V_x \;+\; j\omega\, C_{gd}\, V_x.$$

Since $V_x = V_{gs,\text{int}}$, we obtain

$$I_2 \;=\; \big(g_m + j\omega\, C_{gd}\big)\, V_x \;=\; \big(g_m + j\omega\, C_{gd}\big)\, \frac{V_1}{1 + j\omega\, R_G(C_{gs} + C_{gd})}.$$

However, note that the $j\omega\, C_{gd}\, V_x$ current flows *from* the internal gate node into the drain node, but because the drain is grounded, it ends up flowing out of the device into the external port. By sign conventions, it appears as a negative contribution in the numerator:

$$I_2 \;=\; \big(g_m - j\omega\, C_{gd}\big)\, V_x.$$

Thus the correct exact form is

$$y_{21} \;=\; \frac{g_m - j\omega\, C_{gd}}{1 + j\omega\, R_G\,(C_{gs} + C_{gd})} = \frac{g_m + \omega^2 R_G C_{gd}(C_{gs} + C_{gd})}{1 + \omega^2 R_G^2 (C_{gd} + C_{gs})^2} - j\omega \frac{C_{gd} - g_m R_G (C_{gs} + C_{gd})}{1 + \omega^2 R_G^2 (C_{gd} + C_{gs})^2} \tag{24}$$

Practically, one often considers simply:

$$\boxed{y_{21} \;\approx\; g_m \;-\; j\omega\, C_{gd} = y_{21,int}}$$

For $y_{22} = I_2/V_2\big|_{V_1=0}$:

- Impose $V_2 \neq 0$ at port 2 (drain), and set $V_1 = 0$ (gate grounded). - The source remains grounded. - We must find the drain current I_2 entering port 2 when V_2 is applied.

Recall:

$$V_x \;=\; \frac{j\omega\, R_G\, C_{gd}}{1 + j\omega\, R_G\,(C_{gs} + C_{gd})}\; V_2.$$

Hence

$$V_{gs,\text{int}} = V_x = \frac{j\omega\, R_G\, C_{gd}}{1 + j\omega\, R_G\,(C_{gs} + C_{gd})}\; V_2.$$

At the drain node $V_d = V_2$, three currents leave the node:

1. The current through the output resistance r_d to ground:

$$I_{r_d} = \frac{V_d - 0}{r_d} \;=\; g_d\, V_2, \quad \text{where } g_d = \frac{1}{r_d}.$$

2. The current through the feedback capacitor C_{gd}, from the drain node to the internal gate node:
$$I_{C_{gd}} \;=\; j\omega\, C_{gd}\,\big(V_d - V_x\big) \;=\; j\omega\, C_{gd}\,\big(V_2 - V_x\big).$$

3. The current supplied by the controlled source $g_m\, V_x$, which goes from drain node downward to ground. In our sign convention, that is a current entering port 2 (if $V_x > 0$).

Summing all currents leaving the drain node (positive outward) gives:

$$I_2 = \underbrace{g_d\, V_2}_{\text{through } r_d} + \underbrace{j\omega\, C_{gd}\,\big(V_2 - V_x\big)}_{\text{through } C_{gd}} + \underbrace{g_m\, V_x}_{\text{controlled source}} .$$

Substitute V_x from (32.1):

$$I_2 = g_d\, V_2 + j\omega\, C_{gd}\left[V_2 \;-\; \frac{j\omega\, R_G\, C_{gd}}{1 + j\omega\, R_G(C_{gs} + C_{gd})}\, V_2\right] + g_m\left[\frac{j\omega\, R_G\, C_{gd}}{1 + j\omega\, R_G(C_{gs} + C_{gd})}\, V_2\right].$$

Factor V_2 out:

$$I_2 = V_2\left\{g_d + j\omega\, C_{gd}\left[1 \;-\; \frac{j\omega\, R_G\, C_{gd}}{1 + j\omega\, R_G(C_{gs} + C_{gd})}\right] + g_m\, \frac{j\omega\, R_G\, C_{gd}}{1 + j\omega\, R_G(C_{gs} + C_{gd})}\right\}.$$

Combine the terms in the bracket over the common denominator $1 + j\omega\, R_G(C_{gs} + C_{gd})$. First, write

$$j\omega\, C_{gd}\left[1 - \frac{j\omega\, R_G\, C_{gd}}{D}\right] = j\omega\, C_{gd}\, \frac{D - j\omega\, R_G\, C_{gd}}{D} = j\omega\, C_{gd}\, \frac{1 + j\omega\, R_G(C_{gs} + C_{gd}) - j\omega\, R_G\, C_{gd}}{D},$$

where $D = 1 + j\omega\, R_G(C_{gs} + C_{gd})$. Notice

$$(\,1 + j\omega\, R_G(C_{gs} + C_{gd})\,) \;-\; j\omega\, R_G\, C_{gd} = 1 + j\omega\, R_G\, C_{gs}.$$

Therefore,

$$j\omega\, C_{gd}\left[1 - \frac{j\omega\, R_G\, C_{gd}}{D}\right] = j\omega\, C_{gd}\, \frac{1 + j\omega\, R_G\, C_{gs}}{D}.$$

Next, the term from the controlled source is

$$g_m\, \frac{j\omega\, R_G\, C_{gd}}{D}.$$

Hence summing:

$$I_2 = V_2\left\{g_d \;+\; \frac{j\omega\, C_{gd}\left[1 + j\omega\, R_G\, C_{gs}\right] + g_m\left[j\omega\, R_G\, C_{gd}\right]}{D}\right\}.$$

Combine the numerator:

$$\begin{aligned} & j\omega\, C_{gd}\left[1 + j\omega\, R_G\, C_{gs}\right] \;+\; g_m\, j\omega\, R_G\, C_{gd} \\ &= j\omega\, C_{gd} \;+\; j^2\, \omega^2\, R_G\, C_{gs}\, C_{gd} \;+\; j\omega\, g_m\, R_G\, C_{gd} \\ &= j\omega\, C_{gd} \;-\; \omega^2\, R_G\, C_{gs}\, C_{gd} \;+\; j\omega\, g_m\, R_G\, C_{gd}. \end{aligned}$$

Thus

$$I_2 = V_2 \left\{ g_d \; + \; \frac{j\omega\, C_{gd} \; - \; \omega^2\, R_G\, C_{gs}\, C_{gd} \; + \; j\omega\, g_m\, R_G\, C_{gd}}{1 + j\omega\, R_G (C_{gs} + C_{gd})} \right\}.$$

By definition,

$$\boxed{y_{22} \; = \; \left.\frac{I_2}{V_2}\right|_{V_1=0} \; = \; g_d \; + \; \frac{j\omega\, C_{gd} \; - \; \omega^2\, R_G\, C_{gs}\, C_{gd} \; + \; j\omega\, g_m\, R_G\, C_{gd}}{1 + j\omega\, R_G (C_{gs} + C_{gd})}}$$

Practically, one often considers simply:

$$\boxed{y_{22} \; \approx \; g_d \; + \; j\omega\, C_{gd} = y_{22,int}}$$

Summarizing, we can say that:

$$y_{11} \approx \frac{j}{\omega R_g (C_{gs} + C_{gd})} + \frac{1}{R_g}$$

The real part of y_{11} is:

$$G_{11} = \mathrm{Re}(y_{11}) \approx \frac{1}{R_g}$$

While for $\omega R_g (C_{gs} + C_{gd}) \ll 1$, we would get:

$$y_{11} \approx j\omega (C_{gs} + C_{gd}) + \omega^2 R_g (C_{gs} + C_{gd})^2 \implies G_{11} = \mathrm{Re}(y_{11}) \approx \omega^2 R_g (C_{gs} + C_{gd})^2$$

For simplicity, we approximate the other Y-parameters using their intrinsic values (thus in this case we consider $R_G \to 0^+$):

- Forward Transfer Admittance y_{21}:

$$y_{21} \approx g_m - j\omega C_{gd}$$

- Output Admittance y_{22}:

$$y_{22} \approx g_d + j\omega C_{gd}$$

- Reverse Transfer Admittance y_{12}:

$$y_{12} \approx -j\omega C_{gd}$$

33 Maximum Frequency of Oscillation $f_{\mathbf{max}}$ via f_T

33.1 Unilateral Power Gain and Definition of $f_{\mathbf{max}}$

The *unilateral* (Ferris) small-signal power gain G' of a two-port transistor is

$$G' \; = \; \frac{|y_{21} - y_{12}|^2}{4\left(\mathrm{Re}(y_{11})\; \mathrm{Re}(y_{22}) \; - \; \mathrm{Re}(y_{12})\; \mathrm{Re}(y_{21})\right)}.$$

Under the *semi-intrinsic* approximation (i.e. including a gate resistance R_G but neglecting other parasitic resistances), one finds—in the high-frequency regime—an approximate form:

$$G' \approx \frac{|g_m|^2}{4\left(\omega^2 R_G \left(C_{gs} + C_{gd}^2\right) g_d - g_m\right)} \approx \frac{g_m^2}{4\,\omega^2\, R_G\, C_G^2\, g_d},$$

where

- g_m is the (intrinsic) transconductance,
- $C_G = C_{gs} + C_{gd}$ is the total gate capacitance,
- g_d is the output conductance,
- R_G is the series gate resistance,
- $\omega = 2\pi f$.

By definition, the *maximum frequency of oscillation* $f_{\max}$ is the frequency at which $G' = 1$. Thus, setting $G' = 1$ in the above approximate expression:

$$1 = \frac{g_m^2}{4\,\omega_{\max}^2\, R_G\, C_G^2\, g_d} \quad \Longrightarrow \quad \omega_{\max} = \frac{g_m}{2\, C_G \sqrt{R_G\, g_d}}.$$

Hence,

$$f_{\max} = \frac{\omega_{\max}}{2\pi} = \frac{g_m}{4\pi\, C_G \sqrt{R_G\, g_d}}.$$

Recall the intrinsic cutoff frequency f_T is

$$f_T = \frac{g_m}{2\pi\, C_G}.$$

Substitute $g_m = 2\pi\, C_G\, f_T$ into the expression for $f_{\max}$:

$$f_{\max} = \frac{2\pi\, C_G\, f_T}{4\pi\, C_G \sqrt{R_G\, g_d}} = \frac{f_T}{2\sqrt{R_G\, g_d}}.$$

Thus the semi-intrinsic relation is

$$\boxed{f_{\max} = \frac{f_T}{2\sqrt{R_G\, g_d}}.} \tag{25}$$

$f_{\max}$ in High-Frequency Electronics is important because:

- **Active vs. Passive Operation:** $f_{\max}$ is the highest frequency at which the transistor can still *amplify power*. Below $f_{\max}$, the device remains an *active* power amplifier; above $f_{\max}$, it becomes effectively *passive* (no net power gain).
- **Practical Relevance:** Unlike the cutoff frequency f_T, which assumes a *short-circuit output* and an *ideal current source* at the input, $f_{\max}$ arises from a *realistic* circuit with finite input/output impedances (e.g. gate resistance R_G, output conductance g_d). Hence $f_{\max}$ is a more practical metric when designing RF and microwave amplifiers.

- **Captured Phenomena:**

  1. *Intrinsic transit-time limitation:* via f_T (governed by g_m and C_G).
  2. *Resistive losses at the gate:* through R_G (introducing an $R_G C_G$ pole that reduces gain at high frequency).
  3. *Finite output conductance g_d:* representing non-ideal saturation and additional loading at the drain.

  In contrast, f_T *does not* account for R_G or g_d, so $f_{\max}$ truly measures the highest *power-gain* bandwidth.

- $\boldsymbol{f_T}$ measures only the *intrinsic* transit-time limitation (g_m and C_G) under *idealized* loading: input current source, output short.

- $\boldsymbol{f}_{\max}$ additionally incorporates:

  1. *Gate-resistance R_G*, which forms an $R_G C_G$ pole that further rolls off gain.
  2. *Output conductance g_d*, which models non-ideal saturation and finite drain impedance.

- $\boldsymbol{f_T}$ thus ignores resistive and loading effects, while $\boldsymbol{f}_{\max}$ predicts the *highest frequency* at which actual *power gain* (for a realistic source/load) remains ¿1.

- $\uparrow g_m \implies \uparrow f_{max}$ (better high-frequency performance);

- $\downarrow R_G \implies \uparrow f_{max}$ (it is a limiting factor at HF);

- $\downarrow g_d \implies \uparrow f_{max}$ (better saturation);

- $\downarrow C_{gs}, C_{gd} \implies \uparrow f_{max}$;

In intrinsic FET the value of f_{max} diverges to infinity, being unphysical.

34 Linear-Regime Charge-Based Model

In the low-V_{DS} (linear) regime, the voltage drop along the channel is small enough that we can assume a uniformly charged channel and neglect quantum capacitance. Below, we first write everything in terms of $C_g = C_{\text{ox}} W L$, then switch to $C_{\text{ox}} = \varepsilon_{\text{ox}}/t_{\text{ox}}$ to exhibit the oxide-thickness dependence.

1. *Channel charge.*

$$Q_{\text{ch}} \;=\; Q_p - Q_g \;=\; C_g V_{\text{th}} \;-\; C_g V_{GS} \;=\; C_g \big(V_{\text{th}} - V_{GS}\big),$$

   where

$$C_g \;=\; C_{\text{ox}} W L\,, \qquad C_{\text{ox}} = \frac{\varepsilon_{\text{ox}}}{t_{\text{ox}}}.$$

   In magnitude,

$$\big|Q_{\text{ch}}\big| = C_{\text{ox}} W L \,\big|V_{GS} - V_{\text{th}}\big|.$$

2. *Carrier density in the channel.*

$$n_{\rm ch} \;=\; \frac{|Q_{\rm ch}|}{e\,W\,L} \;=\; \frac{C_{\rm ox}\,\big|V_{GS}-V_{\rm th}\big|}{e} \;=\; \frac{\varepsilon_{\rm ox}}{t_{\rm ox}}\,\frac{|V_{GS}-V_{\rm th}|}{e}.$$

3. *Channel conductivity.*

$$\sigma_{\rm ch} \;=\; n_{\rm ch}\,e\,\mu \;=\; \underbrace{\frac{\varepsilon_{\rm ox}}{t_{\rm ox}}\,|V_{GS}-V_{\rm th}|}_{C_{\rm ox}\,|V_{GS}-V_{\rm th}|}\,\mu \;=\; C_{\rm ox}\,\mu\,\big|V_{GS}-V_{\rm th}\big|.$$

   In practice, even at $V_{GS} \approx V_{\rm th}$ there is a small residual conductivity $\sigma_{\rm th}$ (e.g. due to subthreshold or channel edge effects). Defining

$$\sigma_{\rm tot} \;=\; \sigma_{\rm th} \;+\; \sigma_{\rm ch} \;=\; \sigma_{\rm th} \;+\; C_{\rm ox}\,\mu\,\big|V_{GS}-V_{\rm th}\big|,$$

   we will carry $\sigma_{\rm th}$ through into the conductance G.

4. *Channel conductance G.* Since $G = (W/L)\,\sigma_{\rm tot}$, we write

$$G \;=\; \frac{W}{L}\Big(\sigma_{\rm th} \;+\; C_{\rm ox}\,\mu\,\big|V_{GS}-V_{\rm th}\big|\Big) \;=\; G_{\rm th} \;+\; \frac{W}{L}\,C_{\rm ox}\,\mu\,\big|V_{GS}-V_{\rm th}\big|,$$

   where we have defined

$$G_{\rm th} \;=\; \frac{W}{L}\,\sigma_{\rm th}.$$

5. *Drain current in the linear regime (V_{DS} small).*

$$I_D \;=\; G\,V_{DS} \;=\; \Big(G_{\rm th} \;+\; \frac{W}{L}\,C_{\rm ox}\,\mu\,\big|V_{GS}-V_{\rm th}\big|\Big)\,V_{DS}.$$

   Usually one picks a branch such as $V_{GS} > V_{\rm th}$ (the "electron channel" or n-branch). In that case $|V_{GS}-V_{\rm th}| = V_{GS}-V_{\rm th}$, and

$$I_D = G_{\rm th}\,V_{DS} \;+\; \frac{W}{L}\,C_{\rm ox}\,\mu\,\big(V_{GS}-V_{\rm th}\big)\,V_{DS}.$$

   Often, if $\sigma_{\rm th}$ (and hence $G_{\rm th}$) is very small, one simply drops the "$G_{\rm th}V_{DS}$" term.

6. *Transconductance $\boldsymbol{g_m}$ (fixing V_{DS}).*

$$g_m \;=\; \left.\frac{\partial I_D}{\partial V_{GS}}\right|_{V_{DS}=\rm const} \;=\; \frac{W}{L}\,C_{\rm ox}\,\mu\,V_{DS} \quad (\text{for } V_{GS} > V_{\rm th}).$$

   Equivalently, noting $E = V_{DS}/L$,

$$g_m \;=\; \underbrace{\mu\,E}_{\substack{\text{carrier "drift}\\ \text{velocity in channel}}} \times \big(C_{\rm ox}\,W\big).$$

   At very high lateral fields $\big(E \to \infty\big)$, carriers saturate at $v_{\rm sat}$, and the above linear-region formula breaks down.

7. *Output conductance* $\boldsymbol{g_d}$ *(fixing* V_{GS}*).*

$$g_d \;=\; \left.\frac{\partial I_D}{\partial V_{DS}}\right|_{V_{GS}=\text{const}} \;=\; G_{\text{th}} \;+\; \frac{W}{L}\,C_{\text{ox}}\,\mu\,\big(V_{GS}-V_{\text{th}}\big),$$

so that the small-signal output resistance is

$$r_o \;=\; \frac{1}{g_d} \;=\; \frac{1}{G_{\text{th}} + \frac{W}{L}\,C_{\text{ox}}\,\mu\,(V_{GS}-V_{\text{th}})}.$$

In the ideal-linear approximation where $G_{\text{th}} \approx 0$, one often writes simply

$$g_d \;=\; \frac{W}{L}\,C_{\text{ox}}\,\mu\,\big(V_{GS}-V_{\text{th}}\big) \quad\Longrightarrow\quad r_o = \frac{L}{W\,C_{\text{ox}}\,\mu\,(V_{GS}-V_{\text{th}})}.$$

As V_{DS} approaches $\big(V_{GS}-V_{\text{th}}\big)$, the channel "pinches off" and the device leaves the linear regime, entering saturation.

35 Intrinsic Cutoff Frequency, Carrier Velocity, Mobility, and g_m

35.1 Definition of the Intrinsic Cutoff Frequency f_T

The short-circuit current gain $H_{21}(\omega)$ of an intrinsic FET is, under the usual approximation $C_{GD} \ll C_{GS}$, given by

$$H_{21}(\omega) \;\approx\; \frac{g_m}{j\,\omega\,C_G}\,,$$

where

- g_m is the small-signal transconductance,
- $C_G = C_{GS} + C_{GD}$ is approximated as the total gate capacitance,
- $\omega = 2\pi f$ is the angular frequency.

The *cutoff frequency* f_T is defined as the frequency at which $|H_{21}(\omega)| = 1$. Thus, setting $|H_{21}| = 1$ at $\omega_T = 2\pi f_T$:

$$1 \;=\; \left|\frac{g_m}{j\,\omega_T\,C_G}\right| \;\Longrightarrow\; \omega_T \;=\; \frac{g_m}{C_G} \;\Longrightarrow\; f_T \;=\; \frac{\omega_T}{2\pi} \;=\; \frac{g_m}{2\pi\,C_G}.$$

Hence,

$$f_T \;=\; \frac{g_m}{2\pi\,C_G}. \tag{26}$$

35.2 Expression for f_T in Terms of Carrier Velocity v

At high frequencies (but before velocity saturation), the transconductance g_m can be expressed in terms of the *carrier (drift) velocity* v and the total gate capacitance C_G. In many FET models (including GFETs in the linear-to-early-saturation regime), one finds

$$g_m = \frac{C_G\, v}{L},$$

where L is the channel length. Substituting into (26) gives

$$f_T = \frac{\dfrac{C_G\, v}{L}}{2\pi\, C_G} = \frac{v}{2\pi\, L}.$$

Thus, the intrinsic cutoff frequency can be written directly in terms of the carrier velocity:

$$f_T = \frac{v}{2\pi\, L}. \tag{27}$$

Solving for v,

$$v = 2\pi\, L\, f_T. \tag{28}$$

35.3 Mobility μ in Terms of f_T

Assume that the carrier drift velocity v is below the saturation velocity v_s, so that v is given by the usual low-field relation

$$v = \mu\, E = \mu\, \frac{V_{DS}}{L},$$

where

- μ is the carrier mobility,
- $E = V_{DS}/L$ is the electric field along the channel,
- V_{DS} is the applied drain–source bias (in the linear or early-saturation regime).

Equate this expression for v with (28):

$$\mu\, \frac{V_{DS}}{L} = 2\pi\, L\, f_T \implies \mu = \frac{2\pi\, L^2\, f_T}{V_{DS}}.$$

Therefore, the field-effect mobility in terms of the cutoff frequency f_T, channel length L, and drain bias V_{DS} is

$$\mu = \frac{2\pi\, L^2\, f_T}{V_{DS}}. \tag{29}$$

35.4 Expression for the Transconductance g_m

General High-Frequency Form From the relation used above,

$$g_m \;=\; \frac{C_G\, v}{L}.$$

Substitute $v = 2\pi\, L\, f_T$ from (28):

$$g_m \;=\; \frac{C_G\,\big(2\pi\, L\, f_T\big)}{L} \;=\; 2\pi\, C_G\, f_T.$$

Equivalently, one recovers the same form as (26), since $f_T = g_m/(2\pi C_G)$.

Linear-Regime (Field-Effect) Form In the low-field (non-saturated) regime of a GFET or any FET, the drain current (for small V_{DS}) can be modeled by:

$$I_D \;=\; \frac{W}{L}\, C_{\text{ox}}\, \mu\, \big|V_{GS} - V_{\text{th}}\big|\, V_{DS},$$

where

- W is the channel width,
- C_{ox} is the oxide capacitance per unit area,
- μ is the low-field carrier mobility,
- V_{GS} is the gate–source voltage, and V_{th} is threshold (or Dirac) voltage,
- V_{DS} is the drain–source bias (assumed small enough that the channel is not yet saturated).

By definition,

$$g_m \;=\; \left.\frac{\partial I_D}{\partial V_{GS}}\right|_{V_{DS}}.$$

Since $I_D \propto |V_{GS} - V_{\text{th}}|$, one obtains

$$g_m \;=\; \frac{W}{L}\, C_{\text{ox}}\, \mu\; \cdot sign\big(V_{GS} - V_{\text{th}}\big)\;\; V_{DS}.$$

If $V_{GS} > V_{\text{th}}$ (electron conduction), $sign(V_{GS} - V_{\text{th}}) = +1$, so

$$g_m \;=\; \frac{W}{L}\, C_{\text{ox}}\, \mu\, V_{DS}.$$

Sometimes one writes $C_G = C_{\text{ox}}\, W\, L$. In that notation,

$$g_m \;=\; \frac{C_G}{L}\, \mu\, V_{DS}.$$

Note that at low fields $\mu\, V_{DS}/L$ is precisely the drift velocity v, so this is consistent with $g_m = (C_G\, v)/L$.

36 Intrinsic vs. Extrinsic Cutoff Frequency and Carrier Mobility in GFETs

36.1 Importance of the Intrinsic f_T

The *intrinsic* cutoff frequency f_T is defined as the frequency at which the magnitude of the short-circuit current gain H_{21} of the *intrinsic* (i.e. parasitic-free) transistor drops to unity:

$$|H_{21}(\omega_T)| = 1, \qquad \omega_T = 2\pi\, f_T.$$

Under the usual approximation $C_{GD} \ll C_{GS}$, one finds

$$H_{21}(\omega) \approx \frac{g_m}{j\,\omega\, C_G}, \quad C_G \equiv C_{GS} + C_{GD},$$

so that

$$f_T = \frac{g_m}{2\pi\, C_G} = \frac{v}{2\pi\, L},$$

where v is the carrier (drift) velocity in the channel, and L is the gate length. Equivalently,

$$f_T = \frac{1}{2\pi\, \tau_t}, \quad \tau_t = \frac{L}{v} \text{ (transit time)}.$$

Why f_T Matters.

- f_T is a direct measure of the *intrinsic speed* of the transistor: it quantifies how fast the device can amplify a current (in a short-circuit output condition) before the gain falls below unity.
- In high-frequency design (RF, mm-wave, THz), a high f_T means the transistor can operate as an amplifier up to higher frequencies without additional gain stages.
- Since $f_T \propto v/L$, scaling down the channel length L or boosting the carrier velocity v pushes f_T upward—crucial for modern nanometer-scale GFETs.

36.2 Does Intrinsic f_T Depend on g_d?

Recall that the intrinsic two-port Y-parameters of a FET are:

$$\begin{aligned}
Y_{11} &= j\omega\,(C_{GS} + C_{GD}),\\
Y_{21} &= g_m \;-\; j\omega\, C_{GD},\\
Y_{12} &= -\, j\omega\, C_{GD},\\
Y_{22} &= g_d \;+\; j\omega\,(C_{DS} + C_{GD}).
\end{aligned}$$

The short-circuit current gain is

$$H_{21}(\omega) = \frac{I_2}{I_1}\Big|_{V_2=0} = \frac{Y_{21}}{Y_{11}} = \frac{g_m - j\omega\, C_{GD}}{j\omega\,(C_{GS} + C_{GD})}.$$

Notice that g_d (the output conductance in Y_{22}) does *not* appear in H_{21}. Consequently:

- **Intrinsic f_T is independent of g_d.** Because g_d only shows up in the drain-to-source admittance (i.e. Y_{22}) and does not enter H_{21}, the frequency at which $|H_{21}| = 1$ is unaffected by g_d.

- **Consequence:** Although a large g_d (poor saturation) degrades *power gain*, *voltage gain*, and output linearity, it does not change the *intrinsic current-gain cutoff* f_T. Thus f_T strictly measures the transit-time-limited speed, not the output saturation quality.

36.3 Does Extrinsic f_T Depend on Gate Resistance R_G?

In a real (extrinsic) GFET, we must add parasitic elements around the intrinsic core. In particular, the *gate resistance* R_G appears in series with the gate node. At high frequencies, R_G in combination with the total gate capacitance C_G introduces an $R_G C_G$ pole that further reduces the gain. More concretely, with R_G in series, the input-node admittance becomes

$$Z_{\text{in}}(\omega) \;=\; R_G \;+\; \frac{1}{j\,\omega\,C_G},$$

so the actual gain is

$$H_{21,\text{ext}}(\omega) \approx \frac{g_m}{\big(1 + j\omega\,R_G\,C_G\big)\,j\omega\,C_G}.$$

Solving for ω at $|H_{21,\text{ext}}| = 1$ yields a lower cutoff frequency than the intrinsic f_T.

- **Extrinsic f_T decreases with increasing R_G.** The additional time constant $\tau_G = R_G\,C_G$ causes the magnitude of the gain to roll off earlier (at lower frequency) than if $R_G = 0$.

- **Consequence:** *Minimizing* R_G is critical to preserving a high extrinsic f_T. In practice, advanced GFETs use a low-resistance T-gate or a heavily doped gate stack to reduce R_G. Otherwise, even if the intrinsic device has a very large f_T, the *measured* (extrinsic) f_T can be much lower due to $R_G C_G$.

36.4 Carrier Mobility in Graphene: Comment and Possible Causes

- **Ideal (Intrinsic) Graphene Mobility:**

$$\mu \;>\; 10^5\,\frac{\text{cm}^2}{\text{V}\cdot\text{s}} \quad \text{(ultrahigh)}.$$

  In theory (i.e. suspended, impurity-free graphene at low temperature), phonon-limited mobilities can exceed 10^6–$10^7\,\text{cm}^2/\text{V}\cdot\text{s}$.

- **Observed (Device) Mobility is Often Lower.**

$$\mu_{\text{measured}} \sim 10^3\text{–}10^4\,\frac{\text{cm}^2}{\text{V}\cdot\text{s}} \quad \text{(on typical substrates, room temperature)}.$$

  This is orders of magnitude below the intrinsic limit.

- **Possible Reasons for Reduced Mobility:**

  1. *Charged Impurities and Coulomb Scattering:* Trapped charges in the substrate (e.g. SiO_2) or at the graphene–dielectric interface create Coulomb potentials that scatter carriers.
  2. *Surface Roughness and Ripples:* Graphene conforming to a non-ideal substrate or having intrinsic ripples introduces local strain and sublattice asymmetry, increasing scattering.
  3. *Phonon Scattering:* At room temperature, acoustic and optical phonons (intrinsic to graphene and the substrate) limit mobility.
  4. *Residues from Fabrication:* Lithography and transfer processes leave resist residues or contaminants that degrade the channel.
  5. *Dielectric Polar Optical Phonons:* High-k dielectrics (e.g. HfO_2) can couple polar optical phonons to graphene, further reducing mobility.

  Hence, although $\mu > 10^5\,\mathrm{cm}^2/\mathrm{V{\cdot}s}$ is *intrinsic*, practical GFETs often exhibit much lower μ due to substrate-and-fabrication-induced scattering.

37 EXAM EXAMPLE: 20/01/2022

37.1 Finding V_{DD} So that $V_{DS,Q} = 0.8\,\mathbf{V}$

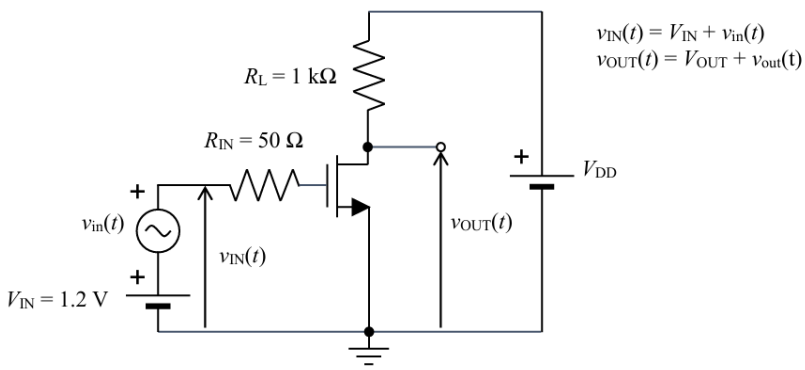

Figure 3: GFET in the common-source amplifier.

The circuit of the problem is in Fig. 3, but we need to rewrite it in the DC regime (Fig. 4).

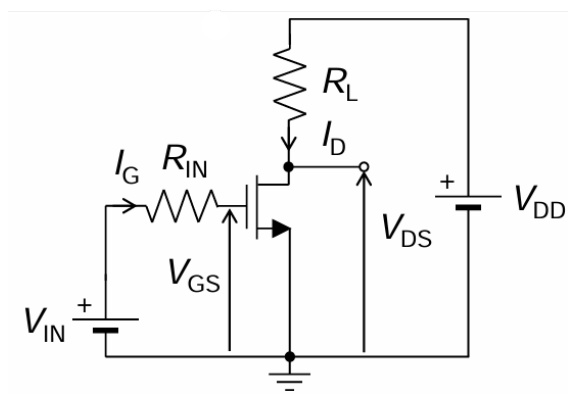

Figure 4: GFET in DC regime.

Here, applying Kirchhoff's voltage law (KVL) to the input part of the circuit, we get:

$$V_{IN} = V_{GS} + I_G R_{in}$$

Since the gate current I_G is zero in DC (due to the gate capacitor, which acts as an open circuit), we get:

$$V_{IN} = V_{GS} = 1.2\,V$$

It is also given that the DC component of the drain-source voltage V_{DS} is 0.8 V. Therefore, the DC operating point has those coordinates/values.
Next, we apply KVL to the output part of the circuit:

$$V_{DD} = V_{DS} + R_L I_D$$

Here, we have two unknowns: V_{DD} and R_L. Even though we know $V_{DS} = 0.8$ V and can calculate I_D from the operating point, we still have two unknowns. Therefore, we need to use the AC regime to solve for R_L (Fig. 5).

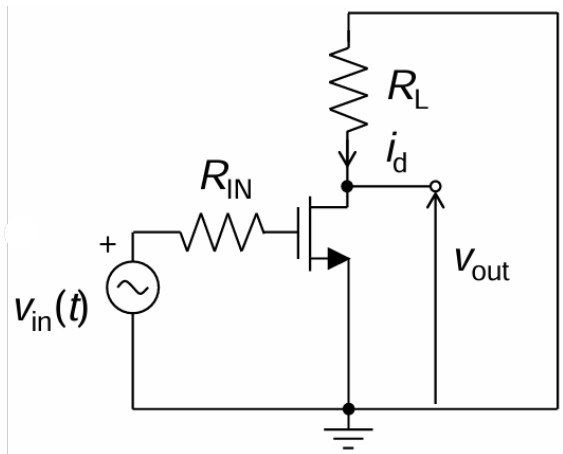

Figure 5: GFET in AC regime.

Small-Signal Model: In the small-signal (AC) equivalent, DC sources (V_{IN}, V_{DD}) are set to zero. The gate sees no DC current, and the GFET is replaced by its small-signal hybrid-π model with transconductance g_m and output conductance g_d. The load resistor R_L appears in parallel with the intrinsic drain resistance $r_o = 1/g_d$.

37.2 Marking Q on Transfer and Output Curves

- **Transfer Characteristic (I_D vs. V_{GS} at $V_{DS} = 0.8$ V):** On the curve for $V_{DS} = 0.8\,\text{V}$, locate $V_{GS} = 1.2\,\text{V}$ (the chosen V_{IN}). At that point, $I_D = 7.4\,\text{mA}$. Mark point Q at $\big(V_{GS} = 1.2\,\text{V},\ I_D = 7.4\,\text{mA}\big)$.
- **Output Characteristic (I_D vs. V_{DS} at $V_{GS} = 1.2$ V):** On the curve for $V_{GS} = 1.2\,\text{V}$, locate $V_{DS} = 0.8\,\text{V}$. At that point, $I_D = 7.4\,\text{mA}$. Mark point Q at $\big(V_{DS} = 0.8\,\text{V},\ I_D = 7.4\,\text{mA}\big)$.

Once you've settled on V_{GS} and computed V_{DD} so that $V_{DS,Q} = 0.8\,\text{V}$, you have a concrete Q-point:

37.2.1 On the Transfer Characteristic (I_D vs. V_{GS})

- Find the vertical line at your chosen V_{GS}.
- Move up until you hit the trace labeled "$V_{DS} = 0.8\,\text{V}$."
- That intersection point is $(V_{GS}, I_{D,Q})$. Mark it with a dot and label it "Q."

37.2.2 On the Output Characteristic (I_D vs. V_{DS})

- Find the curve corresponding to your chosen V_{GS}.
- Draw the straight load line $I_D = (V_{DD} - V_{DS})/R_L$.
- The intersection of that load line with the transistor's curve at $V_{DS} = 0.8\,\text{V}$ is $(0.8\,\text{V}, I_{D,Q})$. Mark it "Q."

By doing so, you simultaneously show, on the transfer plot, "If gate is at V_{GS}, then current is $I_{D,Q}$," and on the output plot, "The load line intersects here, so $V_{DS} = 0.8\,\text{V}$."

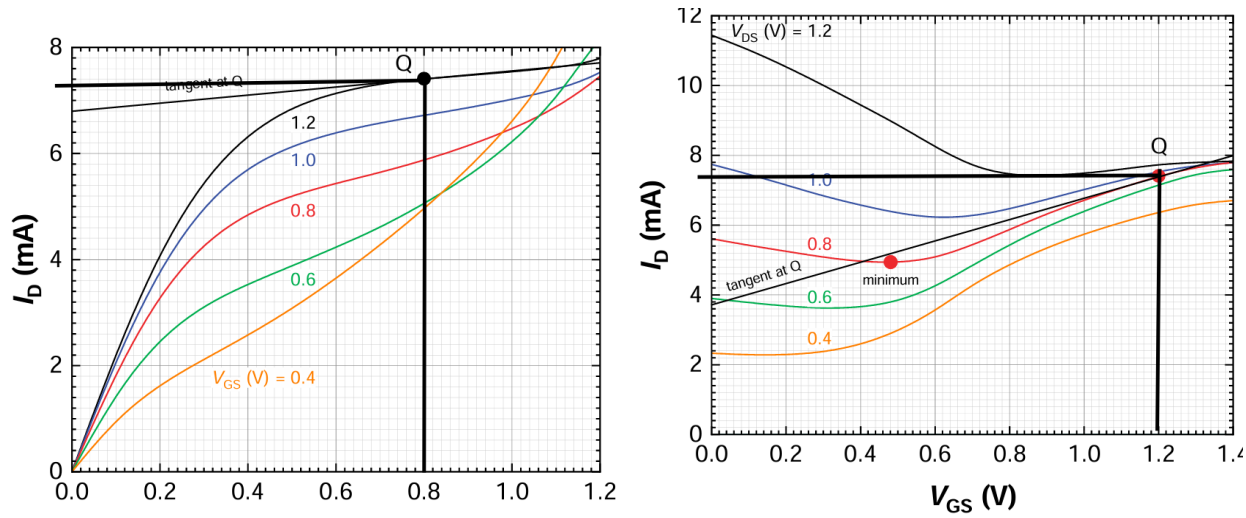

Figure 6: DC current output (left) and transfer (right) characteristics operational point, providing also the tangents.

Known Small-Signal Parameters at Q:

$$\begin{cases} I_D \approx 7.4\,\text{mA} \\ g_m = \frac{\partial I_D}{V_{GS}}|_Q \approx \frac{7.4-3.7}{1.2-0} \approx 3.1\,\text{mS} \\ g_d = \frac{\partial I_D}{V_{DS}}|_Q \approx \frac{7.4-6.8}{0.8-0} = 0.75\,\text{mS} \end{cases}$$

Hence the intrinsic drain resistance is

$$r_d = r_o = \frac{1}{g_d} = \frac{4}{3}\,k\Omega.$$

And the intrinsic transistor gain is:

$$A = \frac{g_m}{g_d} = r_d g_m = \frac{12.4}{3} \approx 4.13$$

37.3 Back to DC: Compute V_{DD}

Now, return to the DC load-line equation:

$$V_{DD} = V_{DS} + R_L\, I_D = 0.8 + 1 \cdot 7.4 = 8.2\,V$$

37.4 Find the concentration of ambient doping in this GFET

By neglecting quantum capacitance and thermal and puddle charges, and by knowing that we have:

$$\begin{cases} \text{channel width} = W = 10\,\mu m \\ \text{gate length} = L = 200\,nm \\ \text{top-gate oxide thickness} = t_{ox} = 4\,nm \\ \text{dielectric constant top-gate oxide} = \varepsilon_{r,ox} = 6.4 \\ \text{vacuum permittivity} = \varepsilon_0 = 8.85 \cdot 10^{-12}\,F/m \\ \text{electron charge} = e = 1.6 \cdot 10^{-19}\,C \end{cases}$$

under the linear-regime charge-based model, we can say that:

1. *Channel charge:* At low V_{DS}, the channel voltage drop is small, so one may assume a uniform channel. Then

$$Q = Q_{\text{imp}} - Q_g = C_g\,V_{\text{th}} \;-\; C_g\,V_{GS} = C_g\,(V_{\text{th}} - V_{GS}),$$

   where the impurities "steal" the electrons of the gate, and $C_g = C_{\text{ox}}\,W\,L$.

2. *Carrier density:* $n = \dfrac{|Q|}{e\,W\,L} = \dfrac{C_{\text{ox}}\,|V_{GS} - V_{\text{th}}|}{e}$.

3. *Conductivity:* $\sigma = n\,e\,\mu = C_{\text{ox}}\,\mu\,|V_{GS} - V_{\text{th}}|$.

4. *Channel conductance:* $G = \dfrac{W}{L}\,\sigma = \dfrac{W}{L}\,C_{\text{ox}}\,\mu\,|V_{GS} - V_{\text{th}}|$.

5. *Drain current for small V_{DS}:*

$$I_D = G\,V_{DS} = \frac{W}{L}\,C_{\text{ox}}\,\mu\,|V_{GS} - V_{\text{th}}|\,V_{DS}.$$

For simplicity, we consider the threshold voltage located in the position of:

$$V_{th} = V_{GS,th} - \frac{V_{DS}}{2}$$

where $V_{GS,th}$ is located at the minimum of the transfer characteristic in our $V_{DS} = 0.8\,V$. In particular, we get that:

$$V_{th} = 0.48 - \frac{0.8}{2} = 0.08\,V$$

Thus, we are working at $V_{GS} > V_{\text{th}}$ (electron "branch") and we can write:

$$I_D = \frac{W}{L}\,C_{\text{ox}}\,\mu\,(V_{GS} - V_{\text{th}})\,V_{DS}.$$

Neglecting quantum capacitance and all thermal/puddle contributions, the only residual channel charge at $V_{GS} = 0$ is due to impurities. At the Dirac threshold $V_{GS} = V_{th}$ (with

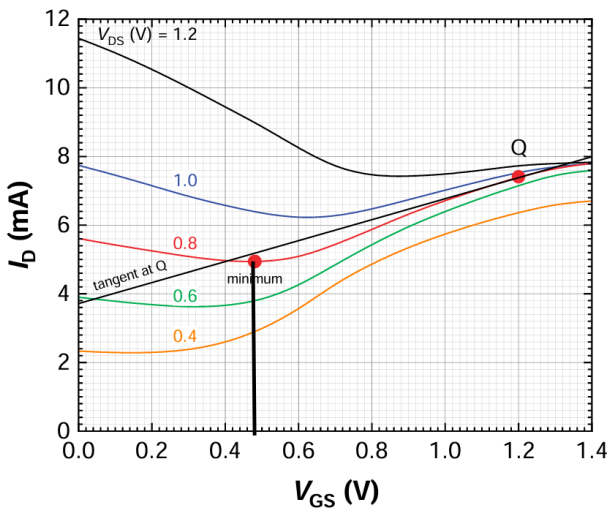

$V_{DS} = 0$), those impurities exactly compensate any induced gate charge. Thus the *impurity-induced surface charge density* is

$$\sigma_{\text{imp}} \;=\; C_{\text{ox}}\, V_{th},$$

where

$$C_{\text{ox}} = \frac{\epsilon_{\text{ox}}}{t_{\text{ox}}} \quad \text{(capacitance per unit area).}$$

Here:

- ϵ_{ox} is the permittivity of the gate insulator,
- t_{ox} is its thickness,
- V_{th} is the (zero-bias) Dirac voltage measured above.
- At $V_{GS} = V_{th}$, the net induced charge in the channel is zero: the gate's capacitor has drawn charge $+C_{\text{ox}}\, V_{th}$ onto its plate, which must be matched by $-C_{\text{ox}}\, V_{th}$ in the channel.
- That channel charge comes entirely from impurities (since no thermal electrons/holes remain at $T = 0$ and quantum capacitance is neglected).
- Therefore $\sigma_{\text{imp}} = -(-C_{\text{ox}}\, V_{th}) = C_{\text{ox}}\, V_{th}$ in magnitude.

In a two-dimensional channel (graphene), the *surface* charge density σ_{imp} (charge per unit area) is related to the 2D impurity concentration n_{imp} (carriers per unit area) by:

$$\sigma_{\text{imp}} = e\, n_{\text{imp}},$$

where e is the elementary charge (1.602×10^{-19} C). Hence

$$n_{\text{imp}} \;=\; \frac{\sigma_{\text{imp}}}{e} \;=\; \frac{C_{\text{ox}}\, V_{th}}{e}.$$

Substituting $C_{\text{ox}} = \epsilon_{\text{ox}}/t_{\text{ox}}$, we get:

$$n_{\text{imp}} = \frac{\epsilon_{\text{ox}}}{t_{\text{ox}}}\,\frac{V_{th}}{e} = \frac{6.4 \cdot 8.85 \cdot 10^{-12}}{4 \cdot 10^{-9}}\,\frac{0.08}{1.602 \cdot 10^{-19}} = 7.07 \cdot 10^{14}\, m^{-2} = 7.07 \cdot 10^{10}\, cm^{-2} > 0.$$

- The fact that $V_{th} > 0$ means that, at zero gate bias, the Fermi level lies below Dirac (in the valence band), so holes dominate. Therefore the ambient doping is *p-type*.
- In practice, typical GFETs on SiO_2 show n_{imp} on the order of 10^{11}–$10^{12}\,\text{cm}^{-2}$. Our extracted value is consistent with slightly doped graphene.
- Because we neglected quantum capacitance, our n_{imp} is slightly overestimated. A finite quantum capacitance would require a slightly larger V_{th} to achieve the same channel charge. But by neglecting it, we have obtained a good zeroth-order estimate (usually we would get a 40% less of the classical result).

Of course, the channel type during operation is n-type or p-type respectively if $V_{GS} > V_{th}$ or $V_{GS} < V_{th}$.
We recall that the equivalent model of a GFET valid in the ac small signal regime at low frequencies is in the figure below.

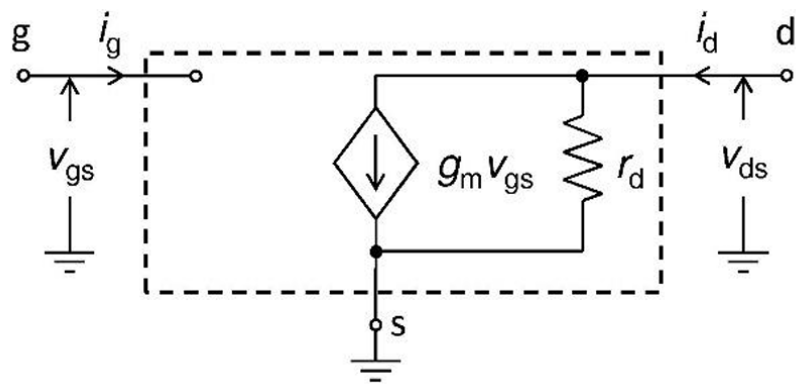
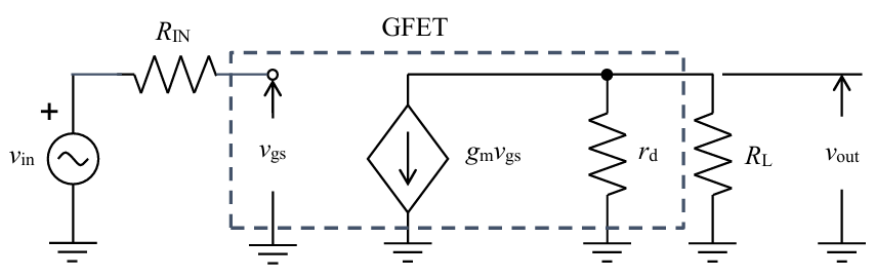
The ac small-signal model of the amplifier is below.