Optical DPSK Communication System

Design, Simulation, and Analysis

Design | Modulation | Analysis

Presented by:

Eng. Theyazan Al-Dhubaibi & Dhia Abbas

eng.theyazen86@gmail.com & dhiaabbas2090@gmail.com

Optical Communications Laboratory
Sana'a University - Faculty of Engineering
Department of Communications & Networks Engineering

Supervisor: Eng. Sara Al-kohlani | September 2025

Introduction

- Optical communication systems form the backbone of modern high-speed data transmission networks
- Growing demand for bandwidth requires advanced modulation formats beyond traditional On-Off Keying (OOK)
- Differential Phase Shift Keying (DPSK) offers improved receiver sensitivity and enhanced tolerance to fiber nonlinearities
- 66% Return-to-Zero (RZ) DPSK provides optimal balance between spectral efficiency and dispersion tolerance

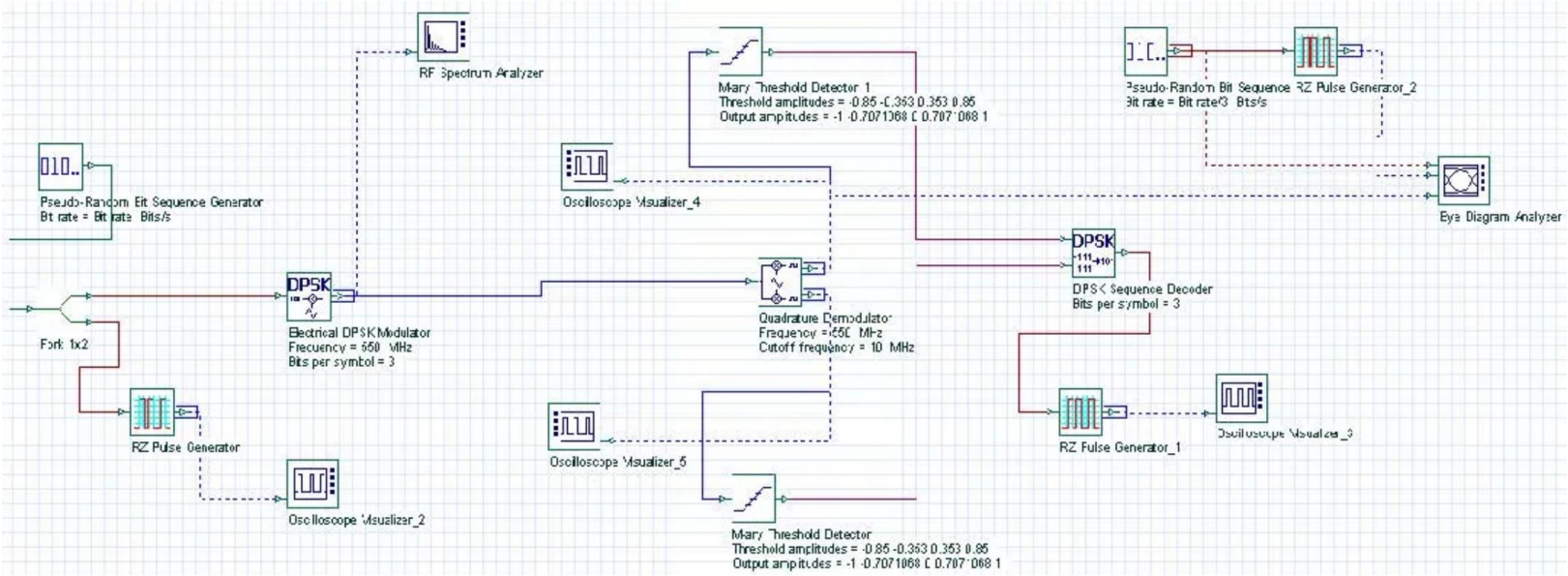

Fig. 1: Optical DPSK Communication System Overview

This project explores the design, simulation, and performance analysis of a 66% RZ-DPSK optical communication system

DPSK Principles

Differential Phase Shift Keying (DPSK) is a non-coherent phase modulation technique where:

- Information is encoded in the **difference** between the phases of successive symbols
- A '1' bit typically corresponds to a π phase shift, while a '0' bit corresponds to no phase shift
- Differential encoding simplifies demodulation by eliminating the need for a stable phase reference

Key Advantages of DPSK:

- ✓ 3 dB sensitivity improvement over OOK
- ✓ Enhanced tolerance to fiber nonlinearities
- ✓ Better spectral efficiency with RZ format

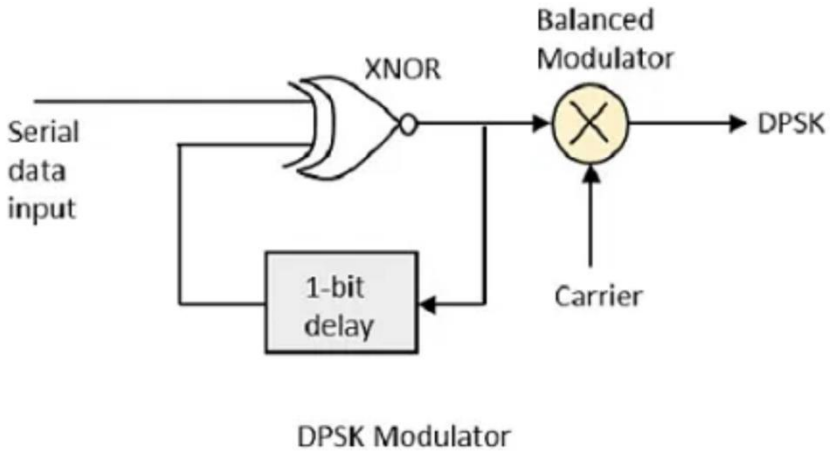

Fig. 2: DPSK Modulation and Demodulation Principles

System Design

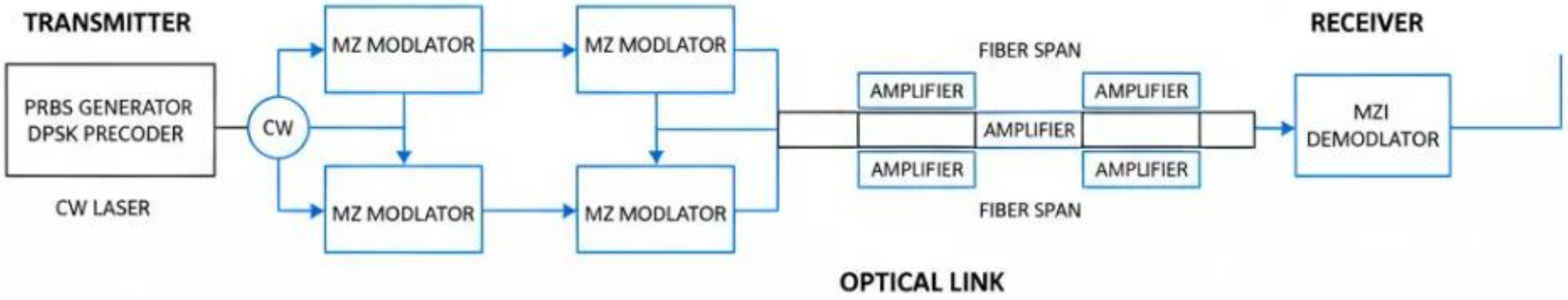

Fig. 3: Block Diagram of the DPSK Optical Communication System

Transmitter
- PRBS generator
- DPSK precoder
- MZ modulators

Optical Link
- Fiber spans (SMF)
- Amplifiers (EDFA)
- Loop control

Receiver
- MZI demodulator
- Balanced detection
- Bessel LPF

Transmitter Components

The transmitter section generates the DPSK modulated optical signal:

PRBS Generator

Generates pseudo-random binary sequence that simulates the information to be transmitted

DPSK Precoder

Performs differential encoding with 1-bit delay, ensuring phase differences between consecutive bits carry the information

CW Laser

Provides continuous optical carrier at 193.1 THz (~1550 nm) with 4 mW output power

Mach-Zehnder Modulators

Two cascaded $LiNbO_3$ modulators: first for phase modulation, second for 66% RZ pulse carving

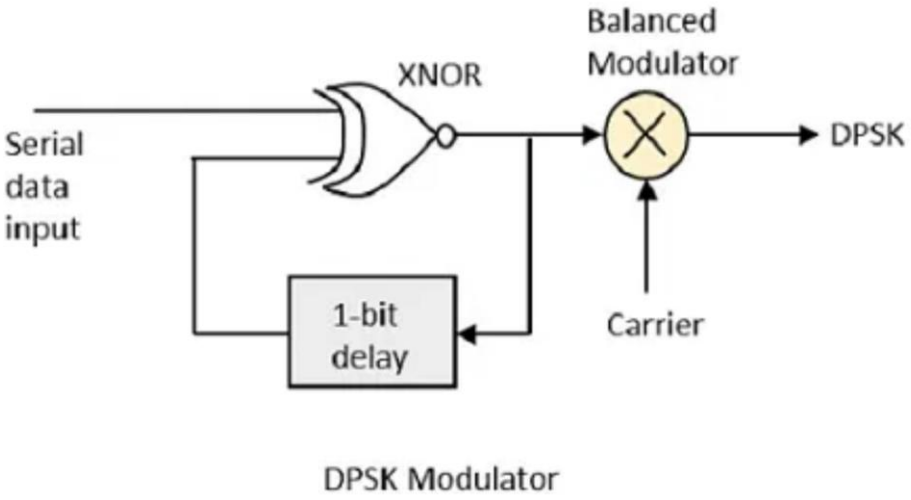

Fig. 4: DPSK Modulator Structure with XNOR Gate and 1-bit Delay

Optical Link

The optical link is the transmission medium that carries the modulated optical signal from transmitter to receiver:

- **Loop Control:** 6 repetitions of cascaded spans to emulate long-haul transmission distance.
- **Single-Mode Fiber (SMF):** Primary transmission medium with 25 km per span.
- **Dispersion Compensating Fiber (DCF):** 10 km per loop to mitigate chromatic dispersion
- **Erbium-Doped Fiber Amplifiers (EDFAs):** Placed per span to compensate for fiber losses

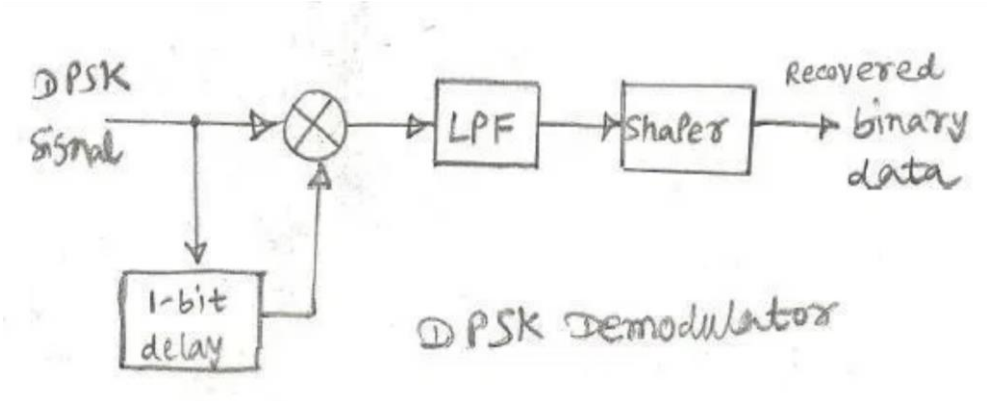

Fig. 5: Complete DPSK System Layout with Optical Link Components

Key Link Parameters:

EDFA Gain:	5 dB
EDFA Noise Figure:	6 dB
Total Simulated Distance:	~150 km (6 × 25 km)
Operating Wavelength:	1550 nm (193.1 THz)

Receiver Components

The receiver section converts the optical DPSK signal back to electrical data:

DPSK Demodulator (MZI)

Delay-line interferometer with 1-bit delay that converts phase differences into intensity differences

Balanced PIN Photodetectors

Two photodiodes detect complementary outputs from MZI, enabling balanced detection that doubles signal swing and cancels common-mode noise

Electrical Subtractor

Performs subtraction of photodiode outputs with polarity alignment (gain = -1)

Bessel Low-Pass Filter

Cutoff frequency at 0.8 × bit rate, preserves timing information while minimizing ringing and reducing ISI

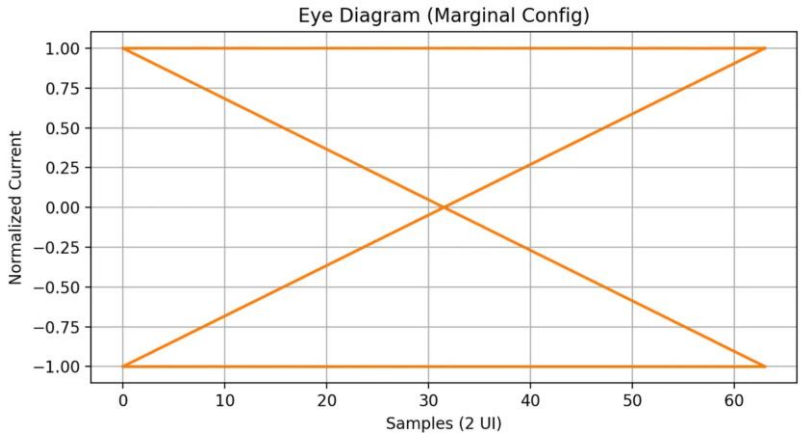

Fig. 6: DPSK Demodulator with Balanced Detection

Key advantage: 3 dB sensitivity improvement over conventional detection

Simulation Results

Key Performance Metrics:

- BER analysis shows optimal performance with **mid_span = 5km** and **OSNR = 63.07 dB**
- Balanced detection significantly improves receiver sensitivity by **~3 dB** compared to single-ended detection
- Bessel LPF at **0.8 × bit rate** provides optimal balance between noise suppression and ISI
- Eye diagrams confirm wide opening with clear threshold separation in optimal configurations

DPSK Signal Waveform

Fig. 8: DPSK Signal Waveform Analysis

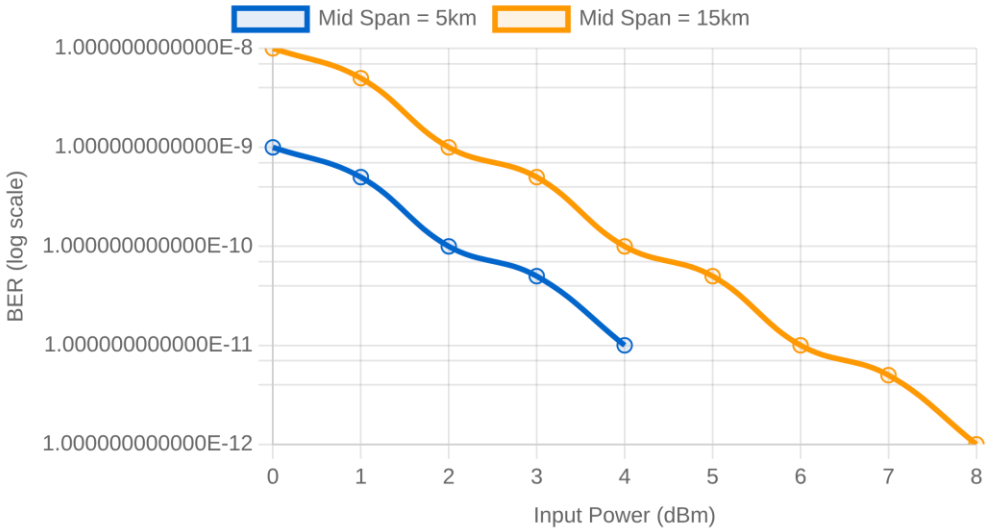

Fig. 7: BER vs Input Power for Different Span Configurations

Conclusion

Key Findings

- Successfully designed and simulated a 66% RZ-DPSK optical communication system
- Confirmed 3 dB sensitivity improvement through balanced detection
- Optimized filter bandwidth (0.8 × bit rate) balances noise suppression and ISI
- Identified optimal span configuration for minimizing BER

Future Work

- Investigate performance at higher bit rates (100+ Gb/s)
- Explore advanced dispersion compensation techniques
- Analyze nonlinear effects at higher launch powers
- Compare with other advanced modulation formats (QPSK, QAM)

Thank you for your attention!

Questions?

References

1. G. P. Agrawal, *Fiber-Optic Communication Systems* , 4th ed. New York: Wiley, 2010.

2. Optiwave, "Advanced Modulation Formats," June 17, 2013. [Online]. Available: https://optiwave.com/resources/optical-system-advanced-modulation-formats/

3. A. H. Gnauck and P. J. Winzer, "Optical phase-shift-keyed transmission," *Journal of Lightwave Technology* , vol. 23, no. 1, pp. 115-130, Jan. 2005.

4. Y. Miyamoto, K. Yonenaga, A. Hirano and M. Tomizawa, "Nx40-Gbit/s DWDM transport system using novel return-to-zero formats with modulation bandwidth reduction," *IEICE Transaction Communications* , vol. E85-B, pp. 374-385, 2002.

5. C. Xu, X. Liu, and X. Wei, "Differential phase-shift keying for high spectral efficiency optical transmissions," *IEEE Journal of Selected Topics in Quantum Electronics*, vol. 10, no. 2, pp. 281-293, March-April 2004.