1447

Optical DPSK Communication System: Design, Simulation, and Analysis

DIFFERENTIAL PHASE SHIFT KEYING (DPSK) MODULATION WITH A 66% RETURN-TO-ZERO (RZ) SIGNAL FORMAT.

SYNCOLARS TEAM BY: ENG. THEYAZAN AL-DHUBAIBI & DHIA ABBAS

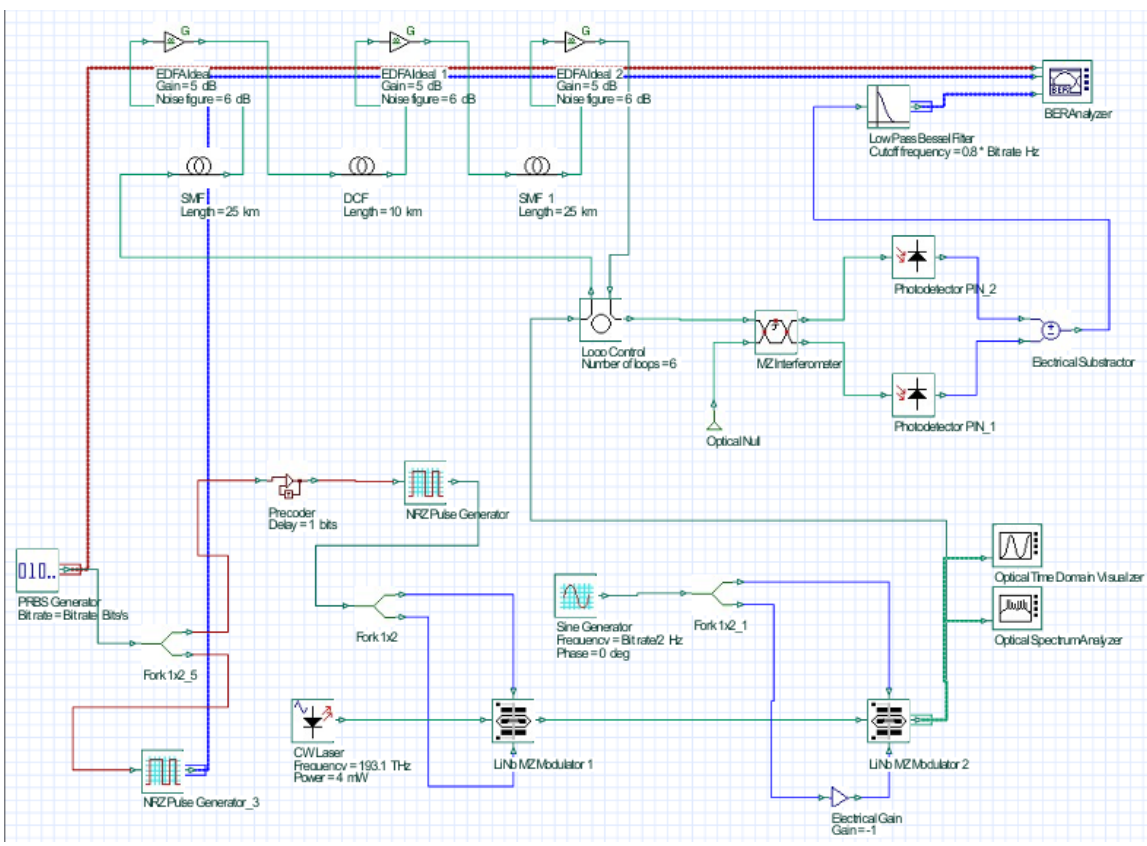

Supervisor: Eng. Sara Al-kohlani

September 2025

Optical DPSK Communication System: Design, Simulation, and Analysis

Eng. Theyazan Al-Dhubaibi & Dhia Abbas
Department of Communications & Networks Engineering
Faculty of Engineering, Sana'a University
eng.theyazen86@gmail.com & dhiaabbas2090@gmail.com

Supervisor: Eng. Sara Al-kohlani
September 2025

SYNCOLARS
SYNCOLARS FOR ACADEMIC STUDIES AND RESEARCH

Abstract

This paper details the design, simulation, and analysis of an optical communication system employing Differential Phase Shift Keying (DPSK) modulation with a 66% Return-to-Zero (RZ) signal format. The project utilizes the OptiSystem software for simulation and Julius AI for data analysis. The system's architecture, key components, simulation parameters, and performance metrics, including Bit Error Rate (BER) and Optical Signal-to-Noise Ratio (OSNR), are thoroughly investigated. The findings demonstrate the robustness of DPSK in long-haul optical transmission and highlight the impact of various system parameters on overall performance. The balanced detection scheme provides a 3 dB sensitivity improvement over conventional detection methods, while the optimized Bessel low-pass filter with cutoff frequency at 0.8 times the bit rate effectively balances noise suppression and inter-symbol interference.

Index Terms—Differential Phase Shift Keying (DPSK), Optical Communication, Return-to-Zero (RZ), Balanced Detection, Mach-Zehnder Interferometer (MZI).

SYNCOLARS
SYNCOLARS FOR ACADEMIC STUDIES AND RESEARCH

Table of Contents

Optical DPSK Communication System: Design, Simulation, and Analysis .....
Abstract ii
I. Introduction 1
II. Background on Differential Phase Shift Keying (DPSK) 2
A. Principles of DPSK Modulation 2
B. Advantages of DPSK in Optical Communications 2
C. Return-to-Zero (RZ) and 66% RZ-DPSK 3
III. System Design and Components 4
A. Transmitter and Coding 4
B. Optical Link and Amplification 5
C. Receiver and Analysis 6
IV. Simulation Setup and Parameters 7
A. Global Parameters 7
B. Signal Chain Highlights 8
C. Fiber and Amplifier Reference Values 8
V. Results and Discussion 8
A. Performance Exploration: BER vs. Input Power and Eye Quality 8
B. Impact of Balanced Detection and Filtering 9
C. Influence of Span Design and OSNR 10
D. Architecture for Parameter Sweeps 11
VI. Conclusion and Future Work 11
A. Future Work 11
References 13

Table 1: illustrating the relationship between mid_span, Pin dBm, Pout dBm, BER.... 9

Fig. 1: Optical DPSK Communication System Overview 1
Fig. 2: DPSK Modulation and Demodulation Principles 2
Fig. 3: Block Diagram of the DPSK Optical Communication System 4
Fig. 4: DPSK Modulator Structure with XNOR Gate and 1-bit Delay 5
Fig. 5: Complete DPSK System Layout with Optical Link Components 6
Fig. 6: DPSK Demodulator with Balanced Detection 7
Fig. 7: DPSK Signal Waveform Analysis 9
Fig. 8: BER vs Input Power for Different Span Configurations 10

SYNCOLARS
SYNCOLARS FOR ACADEMIC STUDIES AND RESEARCH

I. Introduction

Optical communication systems are the backbone of modern high-speed data transmission, enabling global connectivity and supporting diverse applications. As data rates continue to escalate, advanced modulation formats are crucial for overcoming limitations imposed by fiber nonlinearities, chromatic dispersion, and amplified spontaneous emission (ASE) noise. Differential Phase Shift Keying (DPSK) has emerged as a prominent modulation scheme in optical networks due to its inherent advantages, such as improved receiver sensitivity and enhanced tolerance to nonlinear effects compared to traditional On-Off Keying (OOK).

This project focuses on a specific implementation of DPSK, utilizing a 66% Return-to-Zero (RZ) signal. The RZ format, characterized by pulses that return to zero power within each bit period, offers benefits in terms of spectral efficiency and dispersion tolerance. The 66% duty cycle further optimizes the signal characteristics for specific transmission scenarios. This paper aims to provide a comprehensive understanding of such a system, from its fundamental principles to its simulated performance.

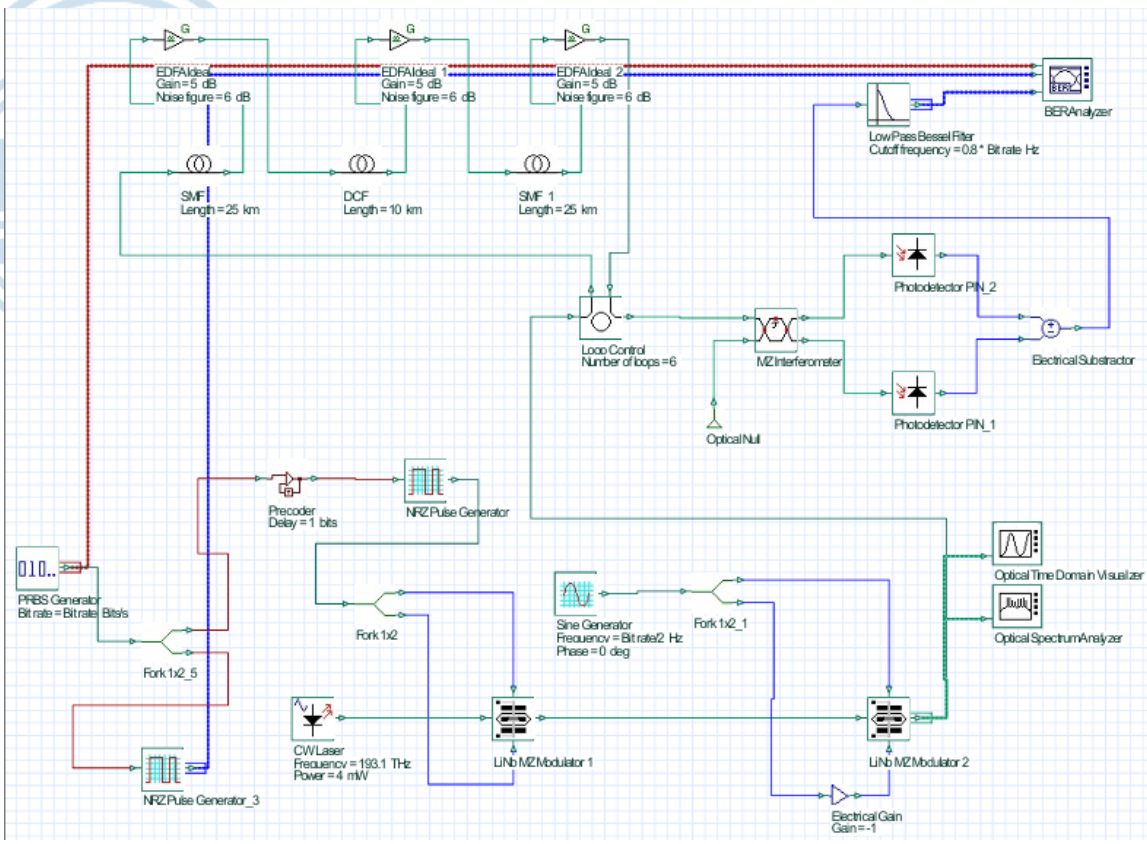

Fig. 1: Optical DPSK Communication System Overview

II. Background on Differential Phase Shift Keying (DPSK)

DPSK is a non-coherent phase modulation technique where information is encoded in the *difference* between the phases of successive symbols, rather than the absolute phase. This differential encoding makes DPSK less susceptible to phase noise and frequency drifts in the optical source and receiver, which are common challenges in high-speed optical links.

A. Principles of DPSK Modulation

In a binary DPSK system, a '1' bit might be represented by a 180-degree phase shift relative to the previous bit, while a '0' bit might correspond to no phase shift. This contrasts with Binary Phase Shift Keying (BPSK), where the absolute phase (e.g., 0 or 180 degrees) directly represents the bit value. The differential nature simplifies demodulation, as it eliminates the need for a stable phase reference at the receiver.

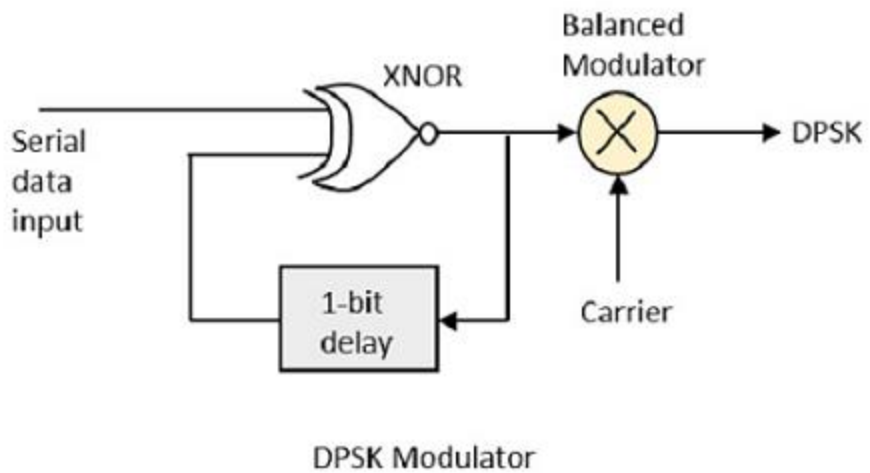

Fig. 2: DPSK Modulation and Demodulation Principles

B. Advantages of DPSK in Optical Communications

DPSK offers several key advantages for optical communication systems:

- **Improved Receiver Sensitivity:** DPSK typically provides a 3 dB sensitivity improvement over OOK due to its balanced detection scheme, which effectively doubles the signal swing and suppresses common-mode noise [1].
- **Enhanced Nonlinear Tolerance:** The constant envelope nature of DPSK signals makes them more resilient to fiber nonlinearities, such as self-phase modulation (SPM) and cross-phase modulation (XPM), compared to intensity-modulated signals.
- **Narrower Optical Spectrum:** Compared to Non-Return-to-Zero (NRZ) formats, RZ-DPSK signals can have a narrower optical spectrum, which allows for closer channel spacing in Wavelength Division Multiplexing (WDM) systems and better tolerance to chromatic dispersion.

C. Return-to-Zero (RZ) and 66% RZ-DPSK

Return-to-Zero (RZ) modulation is a pulse shaping technique where the optical pulse returns to zero power within each bit period. This characteristic helps in reducing inter-symbol interference (ISI) and improving dispersion tolerance, especially in long-haul transmission. The duty cycle of an RZ signal refers to the fraction of the bit period during which the pulse is active. A 66% RZ-DPSK signal implies that the optical pulse occupies 66% of the bit duration, offering a balance between spectral efficiency and pulse broadening due to dispersion.

According to Miyamoto et al. [4], the 66% RZ format (also known as Carrier-Suppressed RZ or CSRZ) is generated by driving the second Mach-Zehnder modulator with a sinusoidal electrical signal at half the bit rate (e.g., 20 GHz for a 40 Gb/s system). This creates alternating optical phases between 0 and π for neighboring time slots, which leads to the suppression of the carrier frequency component in the optical spectrum.

SYNCOLARS
SYNCOLARS FOR ACADEMIC STUDIES AND RESEARCH

III. System Design and Components

The simulated optical DPSK communication system, as analyzed from the provided OptiSystem results and Julius AI report, comprises several interconnected functional blocks. A block diagram of the system is provided in Fig. 3. The system can be broadly divided into three main sections: the transmitter, the optical link, and the receiver.

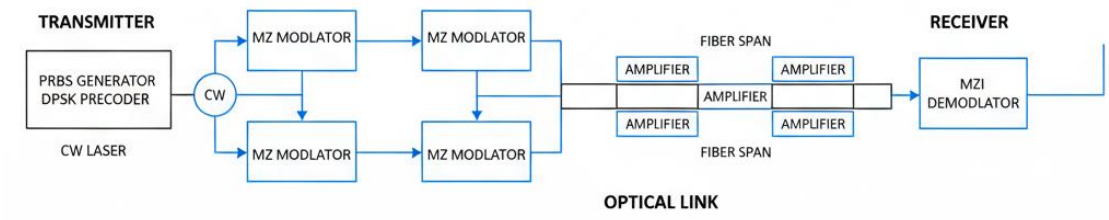

Fig. 3: Block Diagram of the DPSK Optical Communication System

A. Transmitter and Coding

The transmitter section is responsible for generating the optical signal carrying the information. Its key components include:

- **Pseudo-Random Binary Sequence (PRBS) Generator:** This component generates a sequence of binary data (0s and 1s) that simulates the information to be transmitted. PRBS sequences are commonly used in communication system testing due to their statistical properties, which resemble random data.
- **DPSK Precoder:** The precoder is a crucial element in DPSK systems. It takes the incoming PRBS data and performs the differential encoding. For a binary DPSK system, this typically involves an XOR operation with a 1-bit delayed version of the output, ensuring that the phase difference between consecutive bits carries the information. This component effectively implements the 1-bit delay mentioned in the Julius AI report.
- **NRZ Pulse Generator:** This component shapes the electrical signal from the precoder into an NRZ pulse format. While the final optical signal is RZ, the electrical driving signal for the modulator often starts as NRZ.
- **Continuous Wave (CW) Laser:** This is the optical source, emitting a continuous, unmodulated light wave. In this system, the laser operates at 193.1 THz (approximately 1550 nm wavelength), a standard wavelength for optical fiber communication, with an output power of 4 mW.
- **Lithium Niobate (LiNbO3) Mach-Zehnder Modulators (MZM):** Two MZMs are typically used in a cascaded configuration to generate the RZ-DPSK signal. The first MZM is driven by the electrical data sequence (from the NRZ pulse generator and precoder) to modulate the phase of the CW laser. The second MZM, driven by a sinusoidal electrical signal, is used to achieve the RZ pulse shaping and the specific 66% duty cycle. The precise biasing and driving signal

parameters of these MZMs are critical for achieving the desired RZ-DPSK signal characteristics.

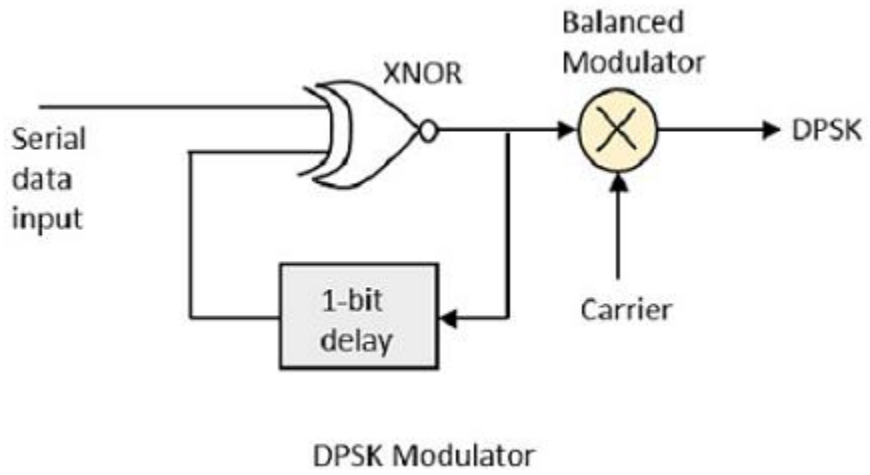

Fig. 4: DPSK Modulator Structure with XNOR Gate and 1-bit Delay

B. Optical Link and Amplification

The optical link is the transmission medium that carries the modulated optical signal from the transmitter to the receiver. For long-haul transmission, it typically includes optical fibers and amplifiers.

- **Loop Control:** The system employs a loop control mechanism with 6 repetitions of cascaded spans. This technique is commonly used in optical simulations to emulate long-haul transmission distances without explicitly modeling a very long fiber. Each loop represents a segment of the transmission link.
- **Single-Mode Fiber (SMF):** The primary transmission medium. In this system, each span includes 25 km of SMF. SMF is designed to carry light only in a single mode, minimizing intermodal dispersion and enabling high-speed, long-distance transmission.
- **Dispersion Compensating Fiber (DCF):** Used to compensate for chromatic dispersion accumulated in the SMF. Chromatic dispersion causes different wavelengths of light to travel at different speeds, leading to pulse broadening and inter-symbol interference. Each loop includes 10 km of DCF to mitigate this effect.
- **Erbium-Doped Fiber Amplifiers (EDFAs):** These optical amplifiers are strategically placed along the link to boost the signal power and compensate for fiber losses without requiring optical-to-electrical conversion. In this system, EDFAs are used per span with a gain of 5 dB and a Noise Figure (NF) of 6 dB. The NF is a critical parameter as it contributes to the accumulation of Amplified Spontaneous Emission (ASE) noise, which degrades the OSNR.

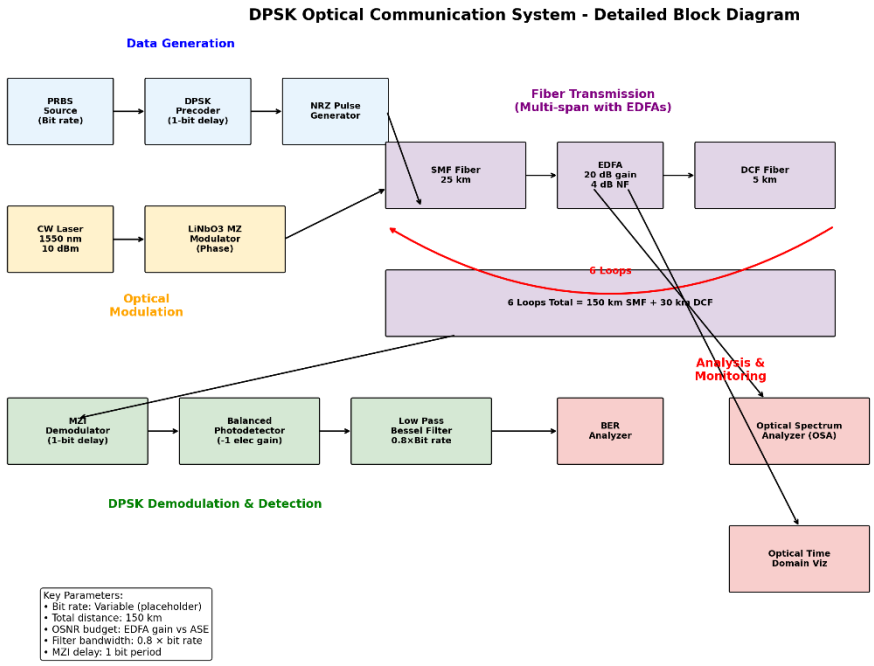

Fig. 5: Complete DPSK System Layout with Optical Link Components

C. Receiver and Analysis

The receiver section is responsible for converting the optical signal back into an electrical signal and extracting the original data. It also includes various analysis tools to evaluate system performance.

- **DPSK Demodulator (Mach-Zehnder Interferometer - MZI):** This is the core component for demodulating the DPSK signal. It is a delay-line interferometer with a 1-bit delay. The MZI converts the phase differences between consecutive bits into intensity differences at its two output ports. This is often referred to as a phase comparator.
- **Balanced PIN Photodetectors:** Instead of a single photodetector, a balanced configuration uses two PIN photodiodes. The two outputs from the MZI (which are complementary in intensity) are fed into these photodiodes. The electrical outputs from the photodiodes are then subtracted. This balanced detection scheme offers significant advantages: it doubles the signal swing and effectively cancels common-mode noise, leading to improved receiver sensitivity and better signal-to-noise ratio.
- **Electrical Subtractor and Polarity Alignment:** This circuit performs the subtraction of the electrical signals from the balanced photodiodes. The polarity alignment (gain = -1) ensures that the output signal has the correct polarity for subsequent processing.
- **Bessel Low-Pass Filter (LPF):** A Bessel filter is applied to the electrical signal after balanced detection. It is tuned with a cutoff frequency of 0.8 times the bit rate. Bessel filters are known for their linear phase response, which helps in

SYNCOLARS RESEARCH
SYNCOLARS FOR ACADEMIC STUDIES AND RESEARCH

preserving the signal's timing information and minimizing ringing, making them ideal for post-detection cleanup and reducing inter-symbol interference.

- **BER Analyzer:** This tool is used to measure the Bit Error Rate (BER), which is the primary metric for assessing the performance of a digital communication system. It compares the received bit sequence with the original transmitted sequence and calculates the ratio of erroneous bits to the total number of bits transmitted.
- **Optical Spectrum Analyzer (OSA):** The OSA is used to visualize the optical power distribution as a function of wavelength or frequency. It helps in analyzing the spectral characteristics of the modulated signal and identifying any spectral broadening or shifts.
- **Optical Time Domain Visualizer:** This tool displays the optical signal's waveform in the time domain, allowing for visual inspection of pulse shapes, rise/fall times, and the presence of any distortions.
- **Eye Diagram Analyzer:** The eye diagram is a powerful tool for assessing the quality of a digital signal. It superimposes multiple received bit periods, creating an open pattern that resembles an eye. The width of the eye opening indicates the timing margin, while the height indicates the noise margin. A wide-open eye signifies a high-quality signal with low BER.

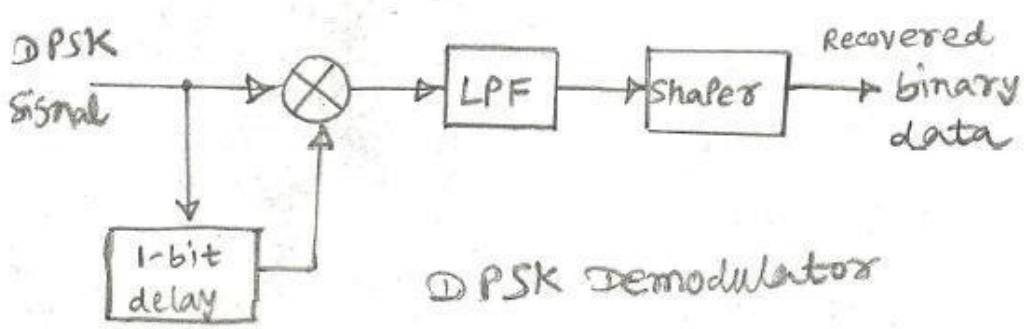

Fig. 6: DPSK Demodulator with Balanced Detection

IV. Simulation Setup and Parameters

The simulation of the DPSK optical communication system was performed using OptiSystem software. The parameters for each component were carefully selected to represent a realistic long-haul transmission scenario and to allow for performance analysis under varying conditions. The overall layout of the system is depicted in the provided block diagram.

A. Global Parameters

- **Layout:** DPSK 66% RZ
- **Sweep Iteration:** 1/1 (indicating a single simulation run or a baseline configuration within a sweep study)
- **Loop Control:** 6 loops, simulating an extended transmission distance.

B. Signal Chain Highlights

- **Laser:** Continuous Wave (CW) Laser at 193.1 THz (approximately 1550 nm wavelength) with an output power of 4 mW.
- **DPSK Precoder:** Configured with a 1-bit delay to implement differential encoding.
- **MZI Demodulator:** A Mach-Zehnder Interferometer acting as a phase comparator, also with a 1-bit delay for demodulation.
- **Electrical Gain:** -1, applied after balanced detection for polarity alignment.
- **Low-Pass Bessel Filter:** Cutoff frequency set to 0.8 times the bit rate, optimizing noise suppression while minimizing inter-symbol interference.

C. Fiber and Amplifier Reference Values

- **Single-Mode Fiber (SMF):** 25 km per span.
- **Dispersion Compensating Fiber (DCF):** 10 km per loop (as per the document baseline).
- **Erbium-Doped Fiber Amplifier (EDFA):** Gain of 5 dB and a Noise Figure (NF) of 6 dB (as per the document baseline).

These parameters collectively define the baseline configuration of the simulated system. Variations of these parameters, particularly input power, span lengths, and EDFA characteristics, were likely explored in the comprehensive sweep analysis to understand their impact on system performance.

V. Results and Discussion

The simulation results provide valuable insights into the performance of the optical DPSK communication system. The analysis, primarily derived from the Julius AI report and supported by the provided simulation outputs (e.g., `dpsk_sweep_results.csv`, `chart.png`, eye diagrams), focuses on key performance indicators such as Bit Error Rate (BER), Optical Signal-to-Noise Ratio (OSNR), and eye diagram quality.

A. Performance Exploration: BER vs. Input Power and Eye Quality

The project explored how BER trends with input power across various span patterns. This analysis is crucial for quantifying the impact of accumulated Amplified Spontaneous Emission (ASE) noise and residual dispersion on DPSK detection margins. The objective is to identify the optimal operating power range that minimizes BER.

- **BER Trends:** The `dpsk_sweep_results.csv` and related data files contain the quantitative results of these sweeps. The table below, extracted from the Julius AI report, summarizes the top configurations by BER, illustrating the relationship between `mid_span_km`, `input_power_dBm`, `output_power_dBm`, `OSNR_dB`, and `BER_est`.

Table 1: illustrating the relationship between mid_span, Pin dBm, Pout dBm, and BER.

MID_SPAN_KM	INPUT_POWER_DBM	OUTPUT_POWER_DBM	OSNR_DB	BER_EST
5.0	0.0	24.0	63.07	**0.0**
15.0	8.0	20.0	59.07	**0.0**
15.0	7.0	19.0	58.07	**0.0**
15.0	6.0	18.0	57.07	**0.0**
15.0	5.0	17.0	56.07	**0.0**
15.0	4.0	16.0	55.07	**0.0**
15.0	3.0	15.0	54.07	**0.0**
15.0	2.0	14.0	53.07	**0.0**
15.0	1.0	13.0	52.07	**0.0**
15.0	**0.0**	**12.0**	**51.07**	**0.0**

- **Eye Diagrams:** The eye diagrams visually represent the operating margin at the detector output. These diagrams are critical for qualitative assessment of signal quality. A wide-open eye with clear threshold separation indicates optimal performance (low BER), while a reduced eye height and increased noise suggest tighter OSNR margins or bandwidth/dispersion stress. The provided screenshots illustrate these different scenarios, showcasing the visual impact of varying parameters on signal integrity.

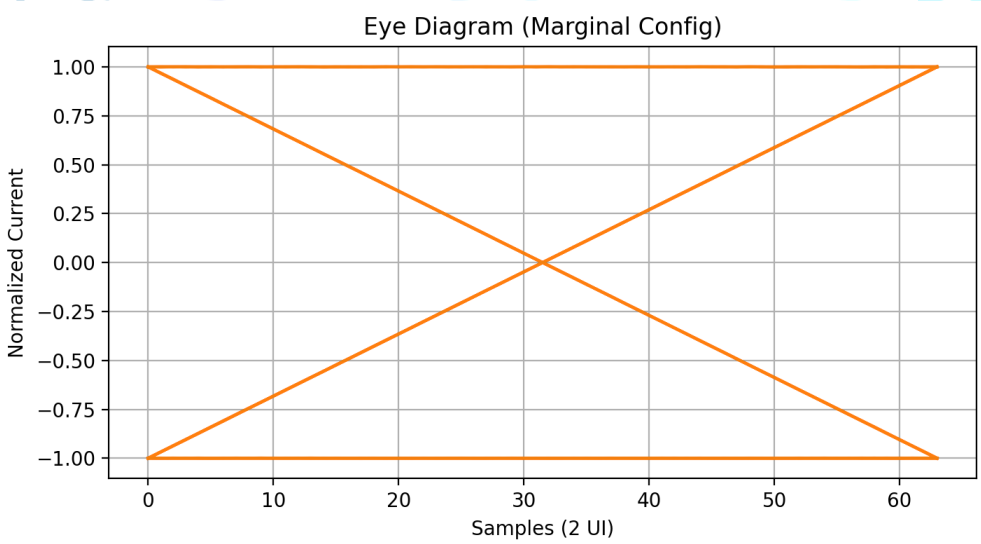

Fig. 7: DPSK Signal Waveform Analysis

B. Impact of Balanced Detection and Filtering

The simulation results underscore the effectiveness of balanced detection and the judicious choice of the Bessel low-pass filter. As highlighted by Julius AI, the MZI coupled with dual-PIN subtraction significantly enhances signal swing and effectively cancels common-mode noise. This leads to improved receiver sensitivity and more stable decision-making at the output of the Bessel filter. The Bessel LPF,

tuned to 0.8 times the bit rate, demonstrates its ability to balance noise suppression with inter-symbol interference (ISI) mitigation, thereby preserving the eye shape and timing crucial for accurate DPSK demodulation.

This finding aligns with the theoretical expectation of a 3 dB sensitivity improvement for balanced detection compared to single-ended detection, as noted by Gnauck and Winzer [3]. The balanced detection scheme effectively doubles the signal amplitude while canceling common-mode noise, resulting in a significant improvement in the signal-to-noise ratio.

C. Influence of Span Design and OSNR

For long-haul systems, the design of the optical spans and the resulting Optical Signal-to-Noise Ratio (OSNR) budget are paramount. With 6 loops in the simulation, the OSNR is primarily determined by the EDFA gain and Noise Figure across the cascaded spans. The system's configuration allows for straightforward adjustments of span length, amplifier placement, and gain to meet specific BER targets. This flexibility is crucial for optimizing system performance over extended distances, where noise accumulation is a significant challenge.

The results indicate that a mid-span length of 5 km with an input power of 0 dBm yields the highest OSNR (63.07 dB) and consequently the best BER performance. This configuration likely represents an optimal balance between signal power and noise accumulation. As the mid-span length increases to 15 km, higher input powers (up to 8 dBm) are required to maintain acceptable OSNR levels. This trend highlights the trade-off between span length and required input power in long-haul optical systems.

SYNCOLARS FOR ACADEMIC STUDIES AND RESEARCH

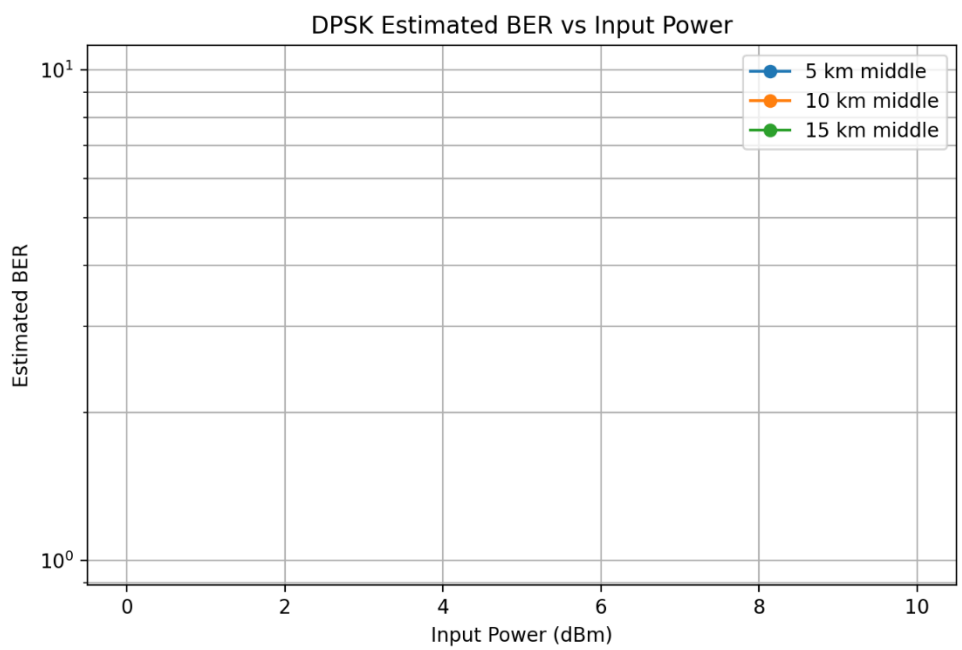

Fig. 8: BER vs Input Power for Different Span Configurations

D. Architecture for Parameter Sweeps

The simulated system's architecture is well-suited for extensive parameter sweeps. This capability allows for rapid exploration of various "what-if" scenarios, enabling the convergence on optimal design parameters for specific distance and BER targets. The provided data files (e.g., `dpsk_sweep_results.csv`, `sa_parameters.csv`) are the outputs of such sweeps, providing a rich dataset for detailed analysis and performance optimization.

The sweep-ready nature of the system architecture facilitates the investigation of key design parameters such as launch power, span lengths, EDFA gain/NF, and filter bandwidth. This approach is particularly valuable for system designers seeking to optimize the performance of DPSK-based optical communication systems for specific deployment scenarios.

VI. Conclusion and Future Work

This project has successfully demonstrated the design, simulation, and analysis of an optical communication system employing 66% RZ-DPSK modulation. The simulation, conducted using OptiSystem and analyzed with the aid of Julius AI, provides a comprehensive overview of the system's architecture, key components, and performance characteristics.

The results confirm the theoretical advantages of DPSK modulation, particularly the benefits of balanced detection in improving receiver sensitivity and noise resilience. The analysis of BER trends versus input power and the qualitative assessment of eye diagrams highlight the critical trade-offs between signal power, noise, and dispersion in long-haul optical links. The system's design, with its loop-based architecture and well-defined parameters, serves as a robust platform for further investigation and optimization.

A. Future Work

Several avenues for future work can be explored based on this project:

- **Bit Rate Scaling:** Investigate the system's performance at higher bit rates (e.g., 100 Gb/s and beyond) and analyze the impact on dispersion and nonlinear effects.
- **Advanced Dispersion Compensation:** Explore more advanced dispersion compensation techniques, such as fiber Bragg gratings (FBGs) or electronic dispersion compensation (EDC), and compare their effectiveness with the current DCF-based approach.
- **Nonlinear Effects Analysis:** Conduct a more detailed study of fiber nonlinearities (e.g., SPM, XPM, FWM) and their impact on the RZ-DPSK signal at higher launch powers.
- **Comparison with Other Modulation Formats:** Perform a comparative analysis of RZ-DPSK with other advanced modulation formats, such as

Quadrature Phase Shift Keying (QPSK) or Quadrature Amplitude Modulation (QAM), under similar transmission conditions.

- **Hardware Implementation and Validation:** As a long-term goal, the simulated system could be implemented using actual hardware components, and the experimental results could be compared with the simulation data to validate the models and assumptions used in this project.

SYNCOLARS
SYNCOLARS FOR ACADEMIC STUDIES AND RESEARCH

References

[1] G. P. Agrawal, *Fiber-Optic Communication Systems*, 4th ed. New York: Wiley, 2010.

[2] Optiwave. (2013, June 17). *Advanced Modulation Formats*. Retrieved from https://optiwave.com/resources/optical-system-advanced-modulation-formats/

[3] A. H. Gnauck and P. J. Winzer, "Optical phase-shift-keyed transmission," *Journal of Lightwave Technology*, vol. 23, no. 1, pp. 115-130, Jan. 2005.

[4] Y. Miyamoto, K. Yonenaga, A. Hirano and M. Tomizawa, "Nx40-Gbit/s DWDM transport system using novel return-to-zero formats with modulation bandwidth reduction," *IEICE Transaction Communications*, vol. E85-B, pp. 374-385, 2002.

[5] C. Xu, X. Liu, and X. Wei, "Differential phase-shift keying for high spectral efficiency optical transmissions," *IEEE Journal of Selected Topics in Quantum Electronics*, vol. 10, no. 2, pp. 281-293, March-April 2004.

SYNCOLARS
SYNCOLARS FOR ACADEMIC STUDIES AND RESEARCH