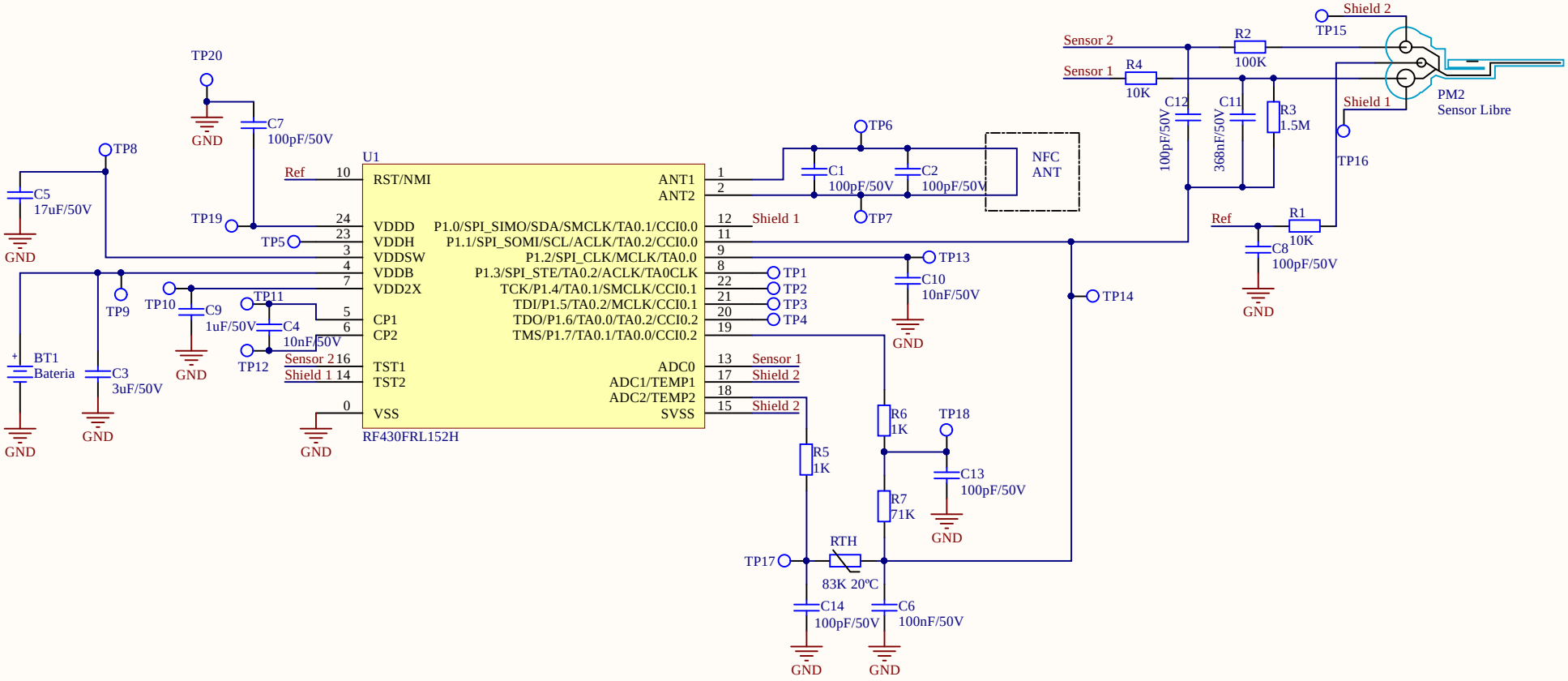


| Title | FreestyleSensorLibre | |
|---|---|---|
| Size A4 | Number | Revision |
| Date: 20/10/2017 | Sheet of | |
| File: D:\OneDrive - Associacao Antonio Vieira\Drawing\Main.SchDoc | Drawn By: Humberto Kramm | |

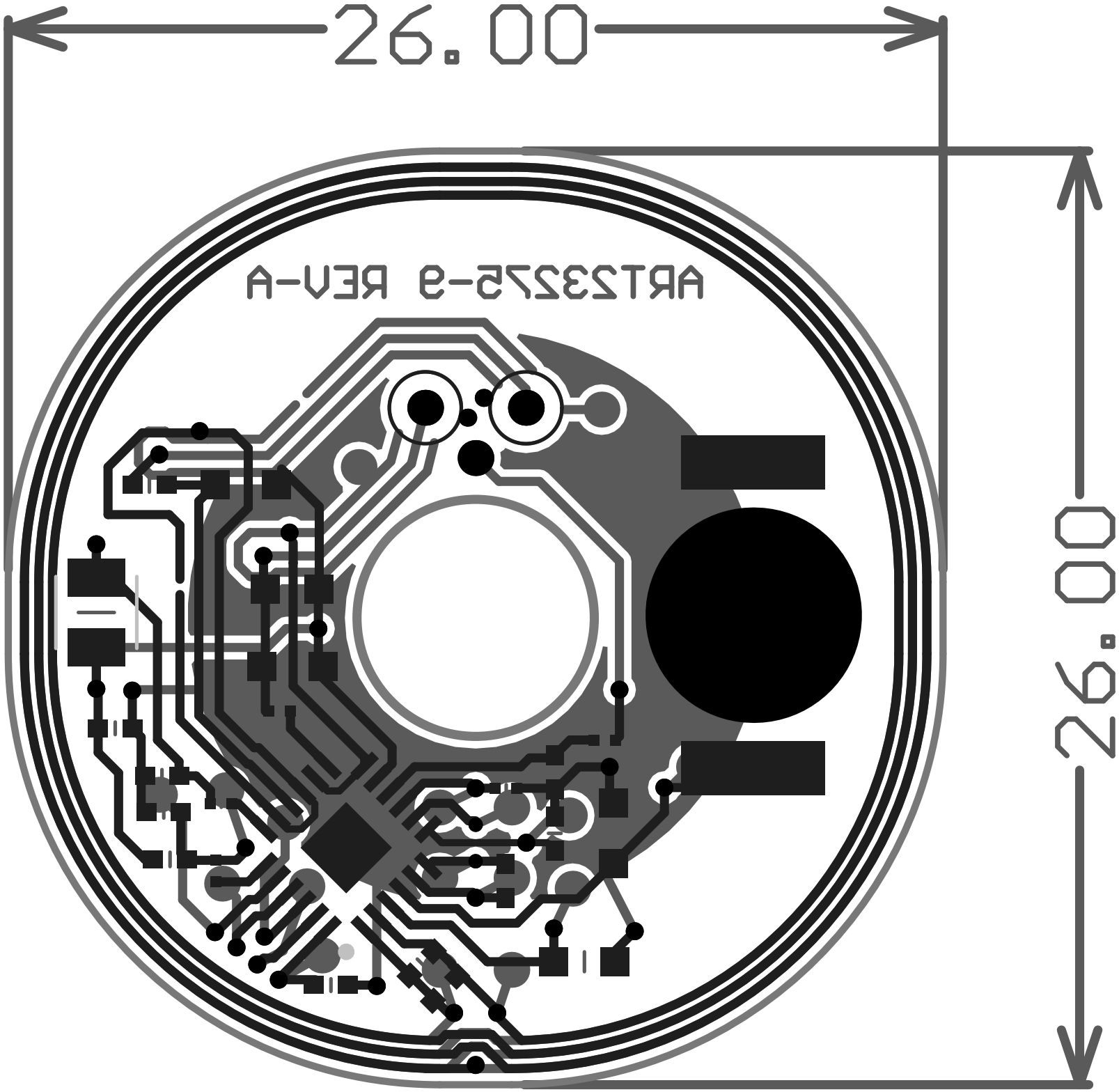
26.00
26.00
AR12327S-9 REV-A