CONFIDENTIAL

G.A. EASME/EMFF/2017/1.2.1.12/S1/02/SI2.789635

Co-funded by the EMFF programme
of the European Union

"Sustainable Blue Economy"

DiveSafe

"Integrated system for scientific and environmental underwater surveys, with advanced health & safety features"

DIVE SAFE

WP5: Commercialization, Sustainability & Market-readiness (TRL8)

Product Specification – DS_Modem

Responsible Organization: UnivPM

Version 0.1, Date: 21/12/2020

Table of Contents

Preface 3
SECTION P – PHYSICAL REQUIREMENTS 4
P1. SCOPE AND OBJECTIVES 4
P2. DESCRIPTION 4
P3. GENERAL REQUIREMENTS 5
P3.1 Docking Station 5
P3.2 Complete DS_Modem 7
P4. ENVIRONMENTAL AND MECHANICAL 8
P4.1 Depth 8
P4.2 Temperature 8
P4.3 Components 8
P5. POWER SUPPLY 9
P6. ASSEMBLY 9
P7. CONNECTION 10
P7.1 DS Power On 10
P7.2 Battery Recharge 11
Section S – SURFACE 11
S1. ACTIVATION 11
Section G – GENERAL 11
G1. MANUFACTURING DEFAULT SETTINGS 11
G2. GENERAL RECOMMENDATIONS 11
Appendix A – Bill of Materials 12

CONFIDENTIAL

This document is intended solely for the addressee and may contain confidential and/or legally privileged information. Any use, disclosure or reproduction without the sender's explicit consent is unauthorised and may be unlawful. If you have received this document in error, please notify d.scaradozzi@univpm.it (Università Politecnica delle Marche) immediately and permanently delete it.

Preface

Main Authors for the document:

Name of partner organization	Main authors
UnivPM	Veronica Bartolucci
	Nicolò Ciuccoli
	David Scaradozzi
	Arianna Pugliese

History of Changes:

Date	Version	History of change
21/12/2020	0.1	First version issued by UnivPM

Associated Documents

- Bill of Materials (Appendix A)
- Software Requirements Specification for Docking Station Software

CONFIDENTIAL

This document is intended solely for the addressee and may contain confidential and/or legally privileged information. Any use, disclosure or reproduction without the sender's explicit consent is unauthorised and may be unlawful. If you have received this document in error, please notify d.scaradozzi@univpm.it (Università Politecnica delle Marche) immediately and permanently delete it.

SECTION P – PHYSICAL REQUIREMENTS

P1. SCOPE AND OBJECTIVES

This document presents the scooter's internal systems and their integration to make it work with the developed DiveSafe components (underwater tablet, environmental and health sensors and the acoustic localization system). In this case the low-cost solution, represented by the Docking Station (DS) connected to the Mini-Modem, will be described. Hereafter in this specification, this product will be referred to as the DS_Modem.

P2. DESCRIPTION

The new designed internal system with its software integrates and manages all information and data from and to the other elements of the DiveSafe system. In detail, it will be able to manage:

i) the input and output control messages to the sensors;
ii) the data exchange between the underwater tablet and the scooter subsystems/payloads;
iii) the processing of the raw data from the sensors.

The DS_Modem is composed of the main components illustrated in the figure below (Figure 1):

1. Evologics Mini-Modem
2. Scooter fixing support
3. Modem Hull
4. Slide + Electronics
5. DS Hull.

Therefore, the DS_Modem is mainly composed of two cylindrical structures (DS and Modem) and a conical part that connects them.

Regarding its buoyancy, it is positive and it must be known that this block of elements could be installed on both DPVs. In this document, however, its installation on the Low-cost Scooter will be considered, because of the presence of the additional PVC support, used for that purpose.

Using Evologics Mini-Modem allows both positioning and communications functionalities but with less efficiency and less costs with respect to the solution with USBL antenna.

CONFIDENTIAL

This document is intended solely for the addressee and may contain confidential and/or legally privileged information. Any use, disclosure or reproduction without the sender's explicit consent is unauthorised and may be unlawful. If you have received this document in error, please notify d.scaradozzi@univpm.it (Università Politecnica delle Marche) immediately and permanently delete it.

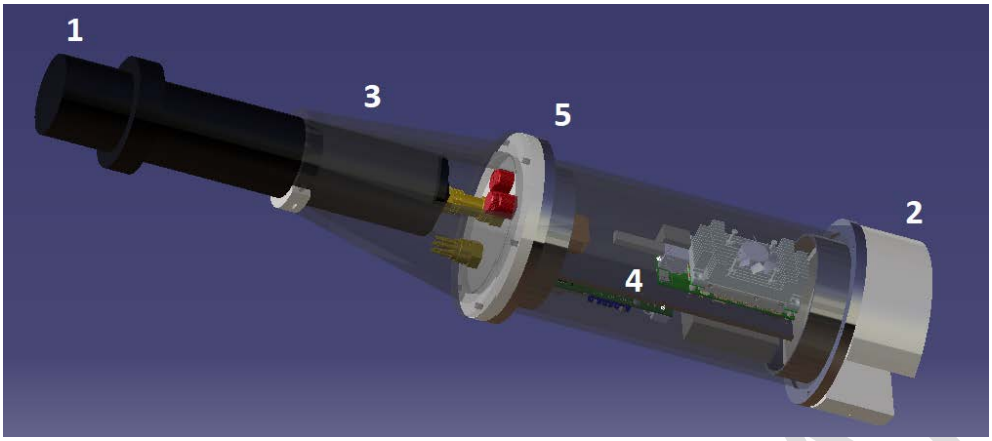

Figure 1. Main components of the DS_Modem

The following table summarize the main information of the components of the DS_Modem:

#	Components	Weight Kg	Volume m^3
1	Modem	1.276	0.00127
2	Scooter fixing support	0.323	0.000583
3	Modem Hull	1.357	0.000622
4	Slide + Electronics	0.770	-
5	DS Hull	1.882	0.0033
	TOTAL	5.6050	0.005775

P3. GENERAL REQUIREMENTS

P3.1 Docking Station

The single DS (Figure 2a) is composed only of the previous blocks 4 and 5 (Slide + Electronics and DS Hull). The DS scaffold is presented in the CAD (Figure 2b) and it is mainly composed of:

1) Upper Cap
2) Upper Flange
3) Router for WiFi and acoustic communications
4) AHRS
5) OpenUPS2
6) Nvidia Jetson TX2
7) Tubular Plexiglass with outer diameter 120 mm and thickness 5 mm
8) Lower Flange
9) Lower Cap
10) PVC support for its installation on the Low-Cost Scooter, custom made
11) Aluminum plate.

CONFIDENTIAL

This document is intended solely for the addressee and may contain confidential and/or legally privileged information. Any use, disclosure or reproduction without the sender's explicit consent is unauthorised and may be unlawful. If you have received this document in error, please notify d.scaradozzi@univpm.it (Università Politecnica delle Marche) immediately and permanently delete it.

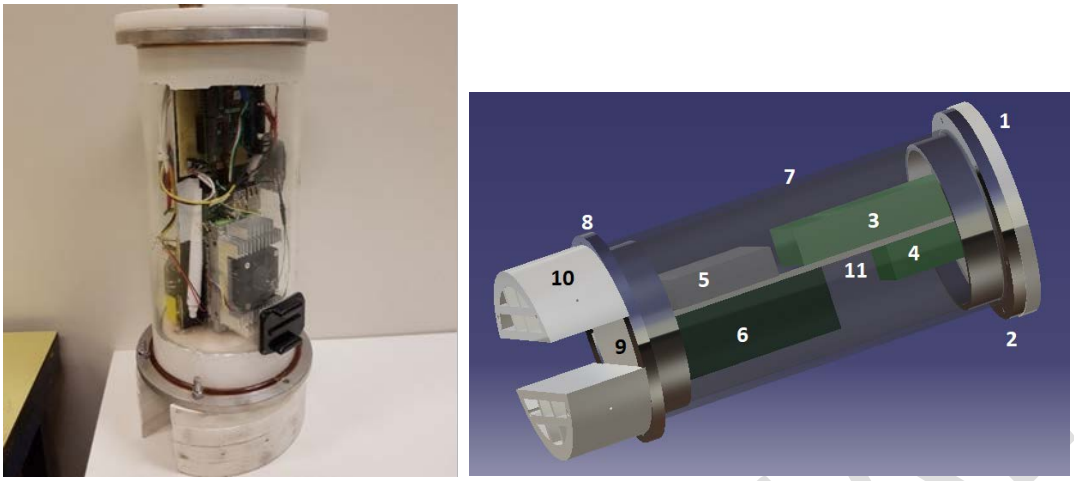

Figure 2. a) real Docking Station and b) its CAD

The two aluminum flanges are glued to the plexiglass tube, while the caps, inserted in the flanges, are made of Delrin. The caps have two o-rings that guarantee the waterproof. This solution allows to build a more strong container. The designed solution has been tested up to 100 meters deep and allows to easily insert a slide (in this case composed of an aluminium plate) on which all the necessary electronic. Furthermore, its cylindrical shape can be attached to any vehicle while maintaining approximately the same hydrodynamic performance.

In Figure 3, all the electronic components of the DS are detailed and indicated as follows:

1. Nvidia Jetson TX2 kit (also indicated in the previous CAD)
2. Auvidea J121
3. Netgear EX6120 (Router also indicated in the previous CAD)
4. AHRS: Xsens MTi-7 DK (also indicated in the previous CAD)
5. OpenUps2 (also indicated in the previous CAD)
6. 18650 LiFePO4 Batteries (non inserted in the picture)
7. MP1584 Buck / Step Down
8. Blue Robotics Depth Meter 30 Bar
9. Enclosure Vent and Plug
10. Subconn 8 pin connector male MCBH8M
11. Subconn 8 pin connector female MCBH8F.

CONFIDENTIAL

This document is intended solely for the addressee and may contain confidential and/or legally privileged information. Any use, disclosure or reproduction without the sender's explicit consent is unauthorised and may be unlawful. If you have received this document in error, please notify d.scaradozzi@univpm.it (Università Politecnica delle Marche) immediately and permanently delete it.

Co-funded by the EMFF programme
of the European Union

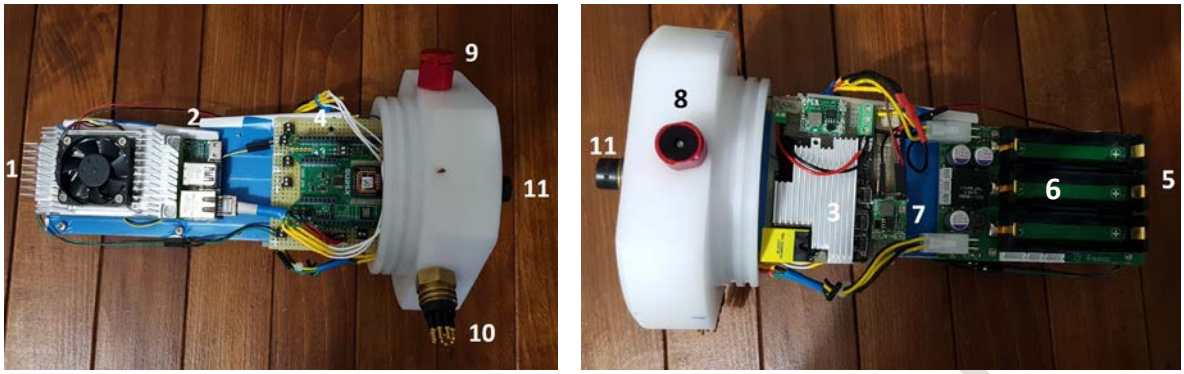

Figure 3. Main components of the Docking Station

The Mass and the Centre of Mass of the only DS are described in the following Figure 4:

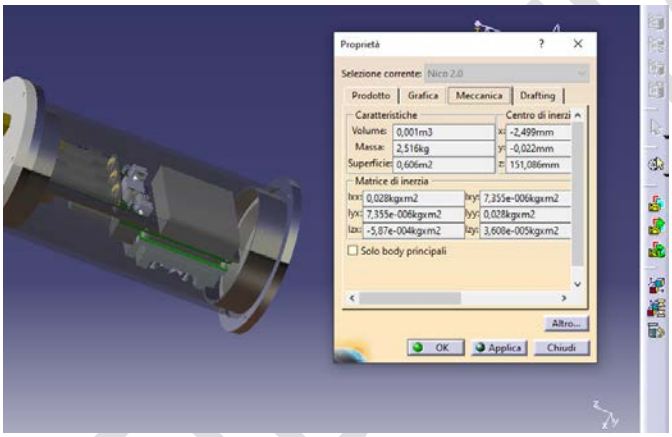

Figure 4. Mass and Centre of Mass of the Docking Station

P3.2 Complete DS_Modem

The DS_Modem solution involves the connection of the DS, previously shown, to a Mini-Modem by means of a 8-pin SUBCON connector (respectively the male of the Mini-Modem with the female of the cap). The Modem Hull, a support that ensures the tightening of the Mini-Modem, is fixed on the DS housing through three holes in which the screws are inserted (Figure 5).

The DS was installed on the low-cost scooter (Yamaha RDS250) instead of the buoyancy chamber, through an expandable PVC support built in the mechanic's workshop (Figure 6). Like Yamaha models, most commercial low-cost scooters have a dedicated compartment on the front for additional battery or a buoyancy chamber: the designed solution could be easily installed on these types of scooter.

Above the DS_Modem, the cradle and the tablet housing will be then placed.

This document is intended solely for the addressee and may contain confidential and/or legally privileged information. Any use, disclosure or reproduction without the sender's explicit consent is unauthorised and may be unlawful. If you have received this document in error, please notify d.scaradozzi@univpm.it (Università Politecnica delle Marche) immediately and permanently delete it.

Figure 5. Mini-Modem connected to the DS

Figure 6. PVC support

P4. ENVIRONMENTAL AND MECHANICAL

P4.1 Depth

Max depth for normal operation: 30m

Depth rating (test depth): The box was tested in a pressure chamber up to 100 meters deep.

P4.2 Temperature

Max and min temp for normal operation: from 0°C to 30 °C

Max and min temp for storage: from -5°C to 35 °C

P4.3 Components

Standards of components:

- Plexiglass Tube
- PVC support
- Aluminum plate
- Steel screws
- Derlin Modem Hull
- Aluminium bars.

CONFIDENTIAL

This document is intended solely for the addressee and may contain confidential and/or legally privileged information. Any use, disclosure or reproduction without the sender's explicit consent is unauthorised and may be unlawful. If you have received this document in error, please notify d.scaradozzi@univpm.it (Università Politecnica delle Marche) immediately and permanently delete it.

P5. POWER SUPPLY

Battery type:	18650 Li-Ion 3.7V Batteries
Operating time:	2 hours
Charge time:	3 hours

P6. ASSEMBLY

First you need to insert the batteries into the OpenUPS2. In particular, the positive pole of the batteries must be towards the cap. Then you have to insert the 2 o-rings previously greased in the appropriate slots of the cap and insert the electronics into the case, making sure to match the orange lines marked. At this point, the DS can be inserted into the scooter, with the orange lines facing up (Figure 7): the white PVC support must be fixed to the scooter through 8 self-tapping screws. The next step is then to screw the plug into the enclosure vent.

Figure 7. DS fixed to the Low-Cost DPV

Then, the Mini-Modem must be connected to the DS using the Modem Hull and connecting the Mini-Modem to the DS though the MCBH8F connector (Figure 8a). Three threaded rods each one with two exagonal nuts are used to fix the Modem Hull to the DS. An additional 3D-printed component with 2 screws is used in the final part of the modem, to prevent it from escaping.

CONFIDENTIAL

This document is intended solely for the addressee and may contain confidential and/or legally privileged information. Any use, disclosure or reproduction without the sender's explicit consent is unauthorised and may be unlawful. If you have received this document in error, please notify d.scaradozzi@univpm.it (Università Politecnica delle Marche) immediately and permanently delete it.

Figure 8. a) MCBH8F connector b) Modem Hull and additional fixing component

P7. CONNECTION

The Docking station has the following connections:

1) Telnet connection via Ethernet connector between Jetson mainboard and modem
2) I2C connection between mainboard and sensors
3) Wi-Fi router to which Mainboard, Diver_MB and Tablet (NA) are connected (TCP and UDP protocols are used)

The DS communication with the surface happens through the acoustic modem.

P7.1 DS Power On

MCBH8M is a waterproof connector (Figure 9) used for the DS power on: in fact, its ignition must be carried out using the correspondent female connector, specially connected to a power supply.

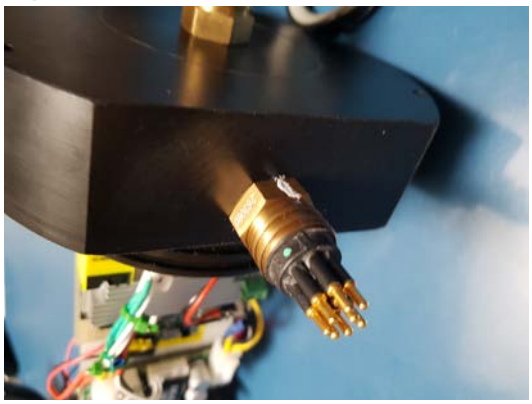

Figure 9. MCBH8M connector

CONFIDENTIAL

This document is intended solely for the addressee and may contain confidential and/or legally privileged information. Any use, disclosure or reproduction without the sender's explicit consent is unauthorised and may be unlawful. If you have received this document in error, please notify d.scaradozzi@univpm.it (Università Politecnica delle Marche) immediately and permanently delete it.

When the Jetson is switched on, the upper fan will start to spin and the LEDs of the Ethernet connector and the rear LED (near the cap) will be on. The pinout of the MCBH8M connector is the following (in the previous figure, you can see a white mark for pins 7 and 8):

1) NC
2) NC
3) NC
4) NC
5) VIN 13-24 V
6) GND
7) NC
8) NC.

P7.2 Battery Recharge

In order to charge the batteries, the DS must be opened and the batteries must be inserted in their special charger.

Section S – SURFACE

S1. ACTIVATION

The software inside the Jetson mainboard starts by itself at boot, once the connector is attached (see P7.1).

Section G – GENERAL

G1. MANUFACTURING DEFAULT SETTINGS

- Water Type: fresh and salt water

G2. GENERAL RECOMMENDATIONS

Every time you have to open or close the Docking Station you have to unscrew the plug of the enclosure vent and remove it to let the air pass: this will make operations easier. Always remember to put the plug back in, especially before entering the water!

CONFIDENTIAL

This document is intended solely for the addressee and may contain confidential and/or legally privileged information. Any use, disclosure or reproduction without the sender's explicit consent is unauthorised and may be unlawful. If you have received this document in error, please notify d.scaradozzi@univpm.it (Università Politecnica delle Marche) immediately and permanently delete it.

Co-funded by the EMFF programme of the European Union

Appendix A – Bill of Materials

- Evologics Mini-Modem
- Yamaha scooter fixing PVC support, custom made, with 8 self-tapping screws
- Modem Hull, custom made, composed of a conical element, 3 threaded rods each one with two exagonal nuts and an additional fixing 3D-printed component with 2 screws
- DS, composed of:
    - Slide + Electronics
    - DS Hull.

All DS parts will be now listed within the following table, that summarizes the bill of materials for the Docking Station's construction and assembly. For some products the price depends on the seller, so the price is an indication starting from which can be chosen to buy from other distributors. Prices were verified on 22 June 2020. The links show the picture of the component and its distributor.

Product	**Quantity**	**Link**	**Price**	**Tot Price**
Nvidia Jetson TX2 kit	1	https://www.nvidia.com/it-it/autonomous-machines/embedded-systems/jetson-tx2/	500	500
Auvidea J121	1	https://auvidea.eu/product/70718/	240	240
Netgear EX6120	2	https://www.netgear.com/home/products/networking/wifi-range-extenders/EX6120.aspx	45	90
Xsens MTi-7 DK	1	https://eu.mouser.com/ProductDetail/Xsens/MTi-7-DK?qs=y6ZabgHbY%252bw%252bcahdy6SvHA==	446.53	446.53
OpenUps2	1	https://www.cartft.com/catalog/il/1821	109	109
18650 LiFePO4 Batteries	6	https://it.rs-online.com/web/p/batterie-a-dimensioni-speciali-ricaricabili/8183005/	10	60
MP1584 Buck / Step Down	4	https://robu.in/product/mini-mp1584-dc-dc-adjustable-buck-module-3a/	1	4
Blue Robotics Depth Meter 30 Bar	3	https://bluerobotics.com/store/sensors-sonars-cameras/sensors/bar30-sensor-r1/	64	192
Enclosure Vent and Plug	1	https://bluerobotics.com/store/cables-connectors/penetrators/vent-asm-r1/	8	8

CONFIDENTIAL

This document is intended solely for the addressee and may contain confidential and/or legally privileged information. Any use, disclosure or reproduction without the sender's explicit consent is unauthorised and may be unlawful. If you have received this document in error, please notify d.scaradozzi@univpm.it (Università Politecnica delle Marche) immediately and permanently delete it.

Subconn 8 pin connector male MCBH8M with its cover cap	2	https://www.amronintl.com/seacon-micro-wet-con-male-bulkhead-connector-with-teflon-wire-pigtail-mcbh8m.html	116.44	232.88
Subconn 8 pin connector female MCBH8F	2	https://www.amronintl.com/seacon-micro-wet-con-female-bulkhead-connector-with-teflon-wire-pigtail-mcbh8f.html	116.44	232.88
1 meter Plexyglass Tube 120(e)/ 110(i) mm	1	https://www.plexishop.it/it/plexiglass/tubi/trasparenti/tubo-plexiglass-o-120-e-110-i-mm.html	62	62
O-ring for the Tube (2.62 mm cross-section and 95 mm internal diameter)	4			
Stainless Steel Screw/Bolt Kit	1	https://it.rs-online.com/web/p/kit-viti-e-bulloni/0281984/	65	65
Corner fixing brackets	8	http://www.profilialluminio-online.it/squadra_angolare_di_fissaggio_per_profili_30x30_vendita_121.php	2	16
DIN Type Matrixboard	1	https://it.rs-online.com/web/p/schede-a-matrice/5153301/	13	13
150x700 mm cylindrical block Polyoxymethylene (acetal resin)	1			
Bulgin, 400 5A Male Solder Circular	32	https://it.rs-online.com/web/p/contatti-per-connettori-circolari/4261322/	0.88	28.16

CONFIDENTIAL

This document is intended solely for the addressee and may contain confidential and/or legally privileged information. Any use, disclosure or reproduction without the sender's explicit consent is unauthorised and may be unlawful. If you have received this document in error, please notify d.scaradozzi@univpm.it (Università Politecnica delle Marche) immediately and permanently delete it.

Connector Contact				
Bulgin, 400 5A Female Solder Circular Connector Contact	32	https://it.rs-online.com/web/p/contatti-per-connettori-circolari/4261344/	1.67	53.44
2 Way PCB Terminal Strip 2.54 mm	20	https://it.rs-online.com/web/p/blocchetti-terminali-da-pcb/7901098/	0.60	12
2 Way PCB Terminal Block 5 mm	5	https://it.rs-online.com/web/p/blocchetti-terminali-da-pcb/8970803/	0.29	1.45
JST, PHR Female Connector	2	https://it.rs-online.com/web/p/custodie-per-connettori-da-pcb/8201466/	0.07	0.14

CONFIDENTIAL

This document is intended solely for the addressee and may contain confidential and/or legally privileged information. Any use, disclosure or reproduction without the sender's explicit consent is unauthorised and may be unlawful. If you have received this document in error, please notify d.scaradozzi@univpm.it (Università Politecnica delle Marche) immediately and permanently delete it.

Co-funded by the EMFF programme of the European Union