UNIVERSITA' POLITECNICA DELLE MARCHE

FACOLTA' DI INGEGNERIA

Corso di Laurea Magistrale in Ingegneria Informatica e dell'Automazione

Laboratorio di Meccatronica

Studenti:	*Ruolo:*	*Docenti:*
GIACINTO MASELLA	Gestionale e stato dell'arte	DAVID SCARADOZZI
ADOLFO DAMIANO CAFARO	Implementazione meccatronica basso livello	
DIANEL AGO	Implementazione digitale del sistema.	
OLEG GENOVA	Ricerca teorica e implementazione algoritmi di modellazione e controllo di alto livello	

PROGETTO: LC_DPV – Study and re-engineering of the DiveSafe Docking Station by introducing cheaper components

Anno Accademico A.A.2021/2022

Table of Contents

Preface **3**

0 Introduction **4**

0.1 Scope and objectives of the work 4

0.2 Structure of the deliverable 4

1 Scope of work, main objectives, and challenges **6**

2 State of art - Mechatronic infrastructure - User interface **8**

2.1 State of art 8

2.2 Mechatronic infrastructure 12

2.2.1 Layout 12

2.2.2 Implementation 14

2.2.3 Software 15

2.2.4 RPi4 Environment Setup 16

2.2.5 Components Setup 17

2.3 User interface 20

3 Technical evaluation of the project **22**

3.1 Methodological framework for validation (TCs, TPs) 22

3.2 Validation Plan Schedule 25

3.3 Safety criteria and indicators 26

3.4 KPI for the system 27

3.5 Indicators for End-User/Stakeholder acceptance and evaluation 28

4 Validation Plan results **32**

5 Final conclusions and future improvements **34**

6 Bibliography **35**

7 Appendix 1 – Testing instructions **37**

8 Appendix 2 - Directories and files organization **39**

9 Appendix 3 - Bill of materials **40**

Preface

Main Authors for the deliverable

Name of a partner organization	Main authors	Authors' role
UnivPM	GIACINTO MASELLA	Management and state of the art
	ADOLFO DAMIANO CAFARO	Low-level mechatronics implementation
	DIANEL AGO	Digital implementation of the system.
	OLEG GENOVA	Theoretical research and implementation of high-level modeling and control algorithms

Supervisors for the deliverable

Name of partner organization	Main contributors
UNIVPM - DII	David Scaradozzi
	Veronica Bartolucci
	Fatjon Prendi

History of Changes

Date	Version	History of change
28/12/2021	1.0	Initial version of the report
03/01/2022	1.1	Minor corrections and structural changes
04/01/2022	1.2	Updated version
07/01/2022	1.3	Updated version integrating input and remarks from main contributors
09/01/2022	1.4	Final version

0 Introduction

0.1 Scope and objectives of the work

The deliverable presents the results of work carried out during the *Laboratorio di Meccatronica* course. In detail, the project has aimed to develop a "Docking Station on-table", starting from the one developed in the *DiveSafe* European project to reengineering it by introducing cheaper components. The product has been designed, verified, and validated:

- firstly, with introducing TCs and TPs to validate the hardware and the hardware in the loop
- then, through the Factory Acceptance Tests (FATs) in the laboratory.

The main objective of validation is to demonstrate that the system is suitable for its targeted/intended purpose and operates smoothly and reliably in the lab environment.

The FATs methodology and methodological framework for validation are defined in chapter 3.

The validation methodology mainly focuses on Key Performance Indicators (**KPIs**) and **instruments to be used** for:

I. evaluating the **technical performance** and **reliability** of the integrated system (with both safety and technical/performance indicators)

II. assessing the value offered by the system in terms of its **appreciation** by domain stakeholders and end-users

III. assessing the value offered by the system in terms of its **impact** on regular use.

0.2 Structure of the deliverable

The deliverable is structured as follows:

- *Chapter 1:* Describes the scope of work and main objectives while highlighting the challenges of the involved work
- *Chapter 2.1:* Defines theoretical background and the state of the art of the proposed system

- *Chapter 2.2:* Defines mechatronic infrastructure and the operational environment for its validation
- *Chapter 2.3* Defines user interface of the proposed system
- *Chapter 3.1:* Discusses the methodological framework for validation
- *Chapter 3.2:* Outlines the validation plan to be performed
- *Chapter 3.3:* Presents the safety criteria and indicators
- *Chapter 3.4:* Provides the list of KPIs for technical evaluation
- *Chapter 3.5:* Elaborates the indicators for End-User/Stakeholder acceptance and evaluation and the questionnaires to be used for the user evaluation
- *Chapter 4:* Validation plan results in terms of KPIs and Technical evaluations
- *Chapter 5*: Final conclusions and future improvements.
- *Bibliography*
- *Appendix 1:* Describes the instructions for testing the system
- *Appendix 2:* Reports the software directories and files summary with links to GitHub
- *Appendix 3:* Lists the components bought to assemble the system.

1 Scope of work, main objectives, and challenges

Underwater sites are difficult to reach and very dangerous making the main activities such as photo documentation, exploration of new areas, search, and recovery, etc. complicated.

To respond to this need, the *DiveSafe* project, funded by the European Union and in which the Università Politecnica delle Marche participates, realizes technologies that facilitate underwater activities to maximize efficiency and safety and minimize the time spent underwater.

Based on the *DiveSafe* project, our **goal** was to adapt the *DiveSafe* Docking Station of the low-cost scooter by replacing the control board *Nvidia JETSON TX2* with the Raspberry Pi 4B and the expensive *X-Sense* IMU with a cheaper one to reduce the costs of realization.

The main **challenges** encountered were about the realization of the hardware support, in particular:

- choosing the IMU sensor analyzing different ones comparing the cost and the performance
- setting the OpenUPS2 up
- understanding how to use the tools provided by the laboratory to build the structure.

In future updates, our Docking Station is going to be installed on an underwater scooter providing these **features**:

- electrical autonomy
- communication with an underwater tablet installed directly on the scooter via wireless connection
- acoustic communication with the surface boat.

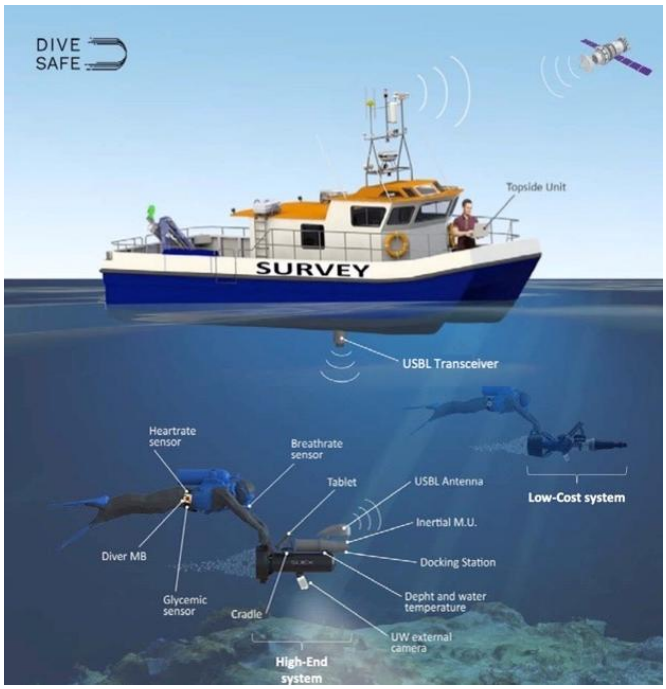

Figure 1 - *DiveSafe* system

The aim is to monitor the position, speed, acceleration, and health status of a scuba diver, collecting data for further processing and visualization, live communication using instant messaging.

Our product is a prototype and it has been tested in a laboratory environment: it achieved **TRL** (Technology Readiness Level) **4**.

2 State of art - Mechatronic infrastructure - User interface

In this chapter, we are going to introduce the state of art behind the project and in the following sections, the hardware and the software support are presented.

2.1 State of art

When compared to dry land, underwater places are invariably more difficult to access and more dangerous. There is a critical requirement to dive and work underwater for underwater archeology and the management of marine protected areas, particularly for documenting, preserving, conserving, seabed-cleaning, and protecting areas and artifacts while also maximizing effectiveness and safety and minimizing underwater time.

DiveSafe, a project that receives funding from the European Maritime and Fisheries Fund (EMFF) program of the European Commission, incorporates SoTA technologies to provide an innovative product to the diving market (primarily professional/scientific and secondarily recreational) that will allow divers to conduct underwater surveys safely and efficiently for tasks such as visual census, photographic and photogrammetric documentation, exploration of unknown areas, search and recovery, touristic visit of large underwater sites, and so on [1]. *DiveSafe* is mostly made up of the following components:

1. A Diver Propulsion Vehicle (DPV) is an underwater **scooter** with a mainboard and environmental and other sensors that can be controlled via an underwater tablet. The connection between the tablet and the Wi-Fi is possible underwater
   Surveying, navigation, and mission planning health and safety alerting using an underwater **tablet** with a camera and apps
2. An underwater acoustic positioning and **communication system** for conveying data to the surface support vessel, such as positioning and diver health data
3. **Wearable sensors** to track a diver's physiological status (breathing, heartbeat, and glucose levels)

4. A **remote server** maintains a cloud database containing raw and processed data from undersea missions.

The implementation of these features started from different studies about underwater systems and communication.

System block structure - As stated in [2], the *DiveSafe* system includes an underwater scooter, a Docking Station, a tablet, and a complete communication system between the surface and the diver's underwater environment, as well as a distant server that allows 3D reconstruction of the suitably photographed scene. During underwater operations, the sensors system shown here can monitor the major indications of the diver's health. It is thus feasible to monitor physiological parameters such as breath rate, heart rate, and glucose levels in real-time, as well as offer information on the decompression phases' execution, to safely ascend once the underwater operation is completed, using these sensors.

In addition, the work published in [3] provides meaningful techniques for collecting data. This paper presents a system that allows scuba divers to collect data while enjoying their leisure activities. To equip an underwater scooter, it comprises a modular robotics system coupled to a variable number of heterogeneous payloads that may be managed directly through a tablet. After the mission, the user can upload the data to a suitable web server and initiate a 3D reconstruction process, which will provide ad-hoc outputs for various applications.

Regarding the underwater tablet, as described in [4], the objective is to design, develop, and validate a novel, viable, and competitive solution for surveying, documenting, and safeguarding Underwater Cultural Heritage. An underwater tablet with environmental sensors will be delivered to the archaeologist, and a properly built data gathering system will be available through a dedicated application.

Underwater telecommunications - In the article [5], the authors have developed and patented an innovative technique for employing a mobile phone inside a pressurized and waterproof enclosure in conjunction with an external microcontroller-based electrical module to create a diver-carried computer. The goal of this project is to describe the design of a system's important component: an external module that measures pressure and temperature data and

sends it wirelessly to a mobile phone. Data from the external module's sensors and peripherals are collected and assembled into a frame. When the frame is received, it is communicated to the mobile device via wireless communication (Wi-Fi or Bluetooth) and evaluated by the device. The system can perform multimodel decompression procedures, has a user-specific screen layout, a large data logging capacity, and all the benefits of a mobile phone, such as sending post-dive SMS messages in the event of preset rules for emergencies, and automatic wireless transfer of dive logs to research centers via the internet and/or dive center management services.

Diver's health status monitoring - In the research in [6], a prototype system was designed, produced, and tested to detect blood glucose while diving and transporting the data in real real-time to the surface. A subcutaneous glucose sensor on the diver delivers glycemia data wirelessly to a microcontroller-based RF receiver board housed in a special waterproof case. The blood glucose value is transmitted to an acoustic modem via *RS232* serial communication, which acts as a relay. Ultrasound communication is used by the modem to send data to the other modem. On the computer stationed at the surface, the data is presented and logged. In the research [7], the aim was to develop a system that can track divers' breathing cycles and the operation of their regulators underwater. It alerts the diver and other nearby divers if the diver's breathing stops for an extended period or if the regulator's intermediate pressure exceeds predefined limits, allowing for the prompt regulator and breathing difficulties intervention. Two pressure sensors and a microcontroller are included in the system. In most cases, all data, including dive profiles, are logged to and transferred to a computer for post-dive analysis. In the event of breathing or regulator issues, the low and high-level warnings allow for prompt action. Rapid identification of breathing and regulator difficulties, as well as the ability to locate an unconscious or deceased diver, are two major advantages of the system. In addition, given the data, it will collect while underwater, this system hopes to contribute to decompression illness research and to assist regulator makers. In the paper [8], the research provides an embedded system with a live and lightweight algorithm that analyzes the intermediate pressure signal of the SCUBA regulator to identify divers' breathing. A system was created and programmed to record the pressure sensor

readings and provide alarms in the absence of breathing. It consisted primarily of two pressure sensors and a low-power microcontroller. The data were analyzed using an algorithm that identified the diver's breathing events.

Data visualization and cloud computing - The main goal of the researchers in [9] is the development of three services: first is a 3-D reconstruction of the underwater environment utilizing a bathymetric data fusion technology that combines optical and auditory data; the second uses a virtual reality technology to schedule dive sessions and explore the underwater site in 3-D; the third one aims to improve the diving experience by providing a virtual guide that runs on an underwater tablet with a hybrid tracking system.

As described in the article [10], additional layers of environmental information, such as geographical coordinates, temperature, pressure, and pH values, which are obtained by the mobile device at the time of the shooting, can be included in photos taken during a mission. Onboard sensors provide some of the data, while individual boards' ability to interact with external devices via several regularly used protocols provides access to the rest. These boards are small enough to fit into a waterproof smartphone case. The data obtained by the mobile device is stored in a database that is controlled by a reliable and well-organized server technology capable of processing and returning results to external users.

2.2 Mechatronic infrastructure

In this section, we outline the mechatronic infrastructure, the electrical layout, and the components setup of the system.

2.2.1 Layout

To electrically feed the components properly, different voltage levels must be delivered. In details:

- OpenUPS2 receives 12V from battery cells or external feed and provides a 12V output level
- Router voltage source must be 5V
- Depth Sensor and IMU accept 3.3V input
- Raspberry Pi 4B must receive 5V feed

To provide the correct voltage levels, Buck converters were bought to split the 12V output from OpenUPS2 to 3.3V and 5V levels.

The 3.3V buck converter output was connected to Router, the 5V level to RPi4. Since IMU feeding is a HAT (Hardware Attached on Top) component, RPi4 provides power to it through GPIO pins. The remaining Depth Sensor feeding was connected to IMU GPIO pins, according to *Figure 2 - Electrical diagram.*

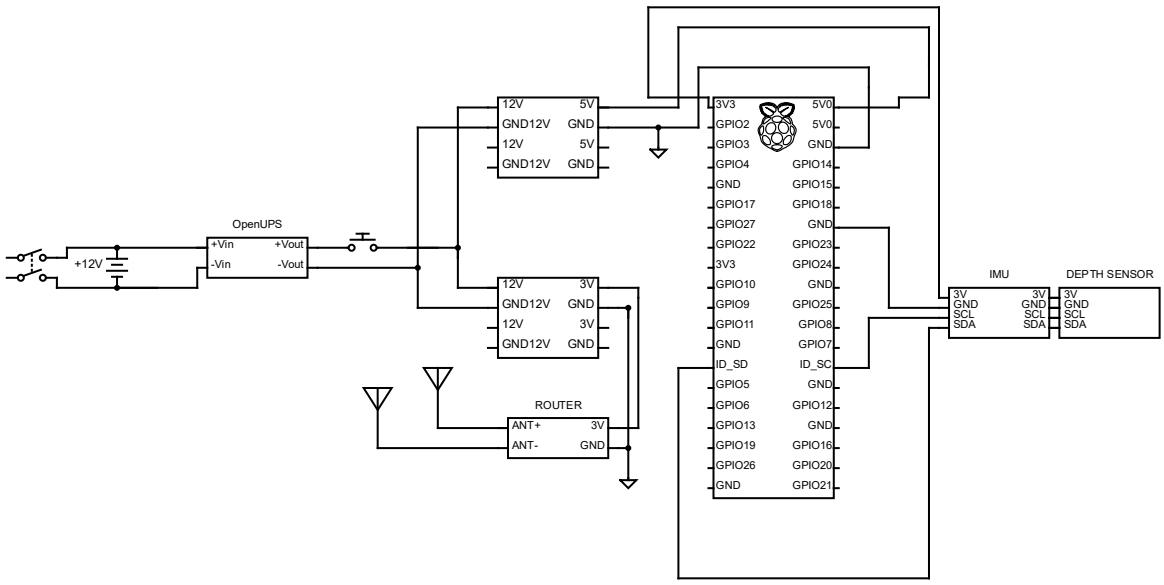

Figure 2 - Electrical diagram

2.2.2 Implementation

Since the Docking Station space is limited, and efficient component placement is required. To reach this goal, the wirings should be as short as possible.

In the final physical layout, we put the Buck Converter circuit beside OpenUPS2, then the router and RPi4 to the opposite side of the support, as we can see in Upperside and Figure 4 - Bottom side.

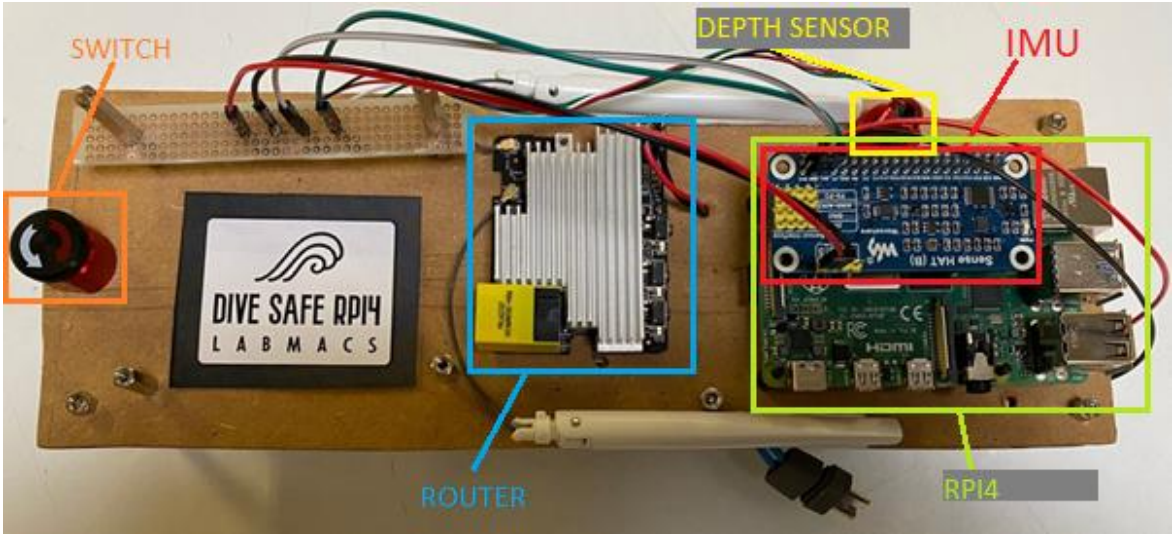

Figure 3 – Upperside

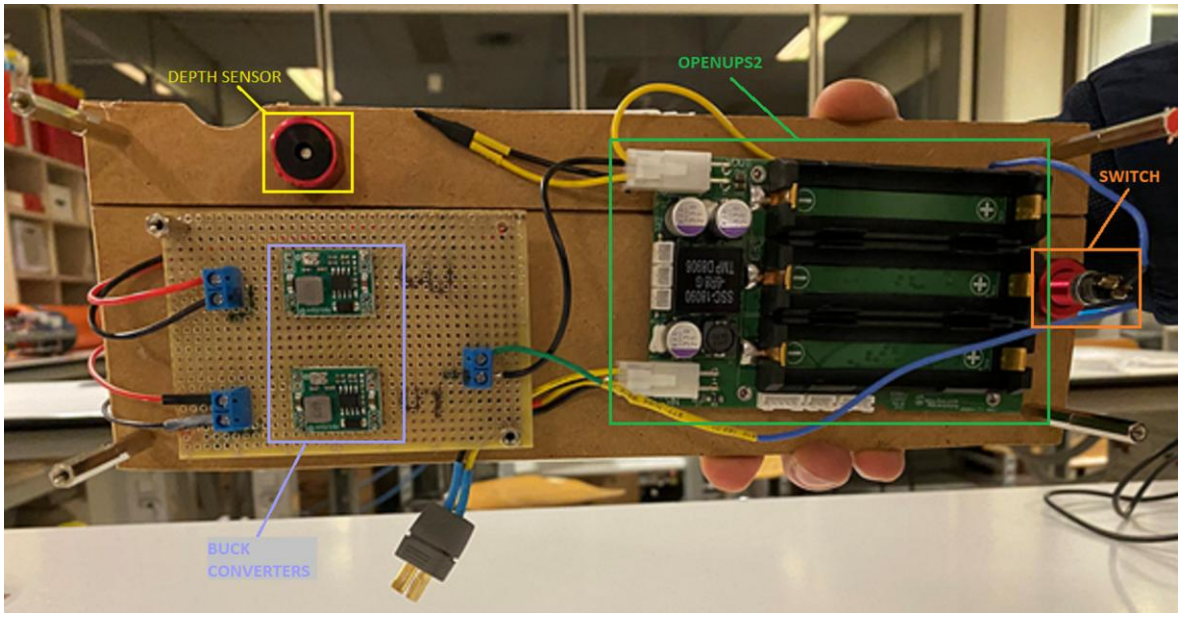

Figure 4 - Bottom side

2.2.3 Software

The high-level implementation consists of integrating the components (mainly RPi4) on a software level. The software provided includes a Python 2 code with libraries, in this structure:

- `Main_Rpi4.py`: is used to get data from sensors and to manage communications between Scuba Tablet and Main PC, located on the boat
- `client_tcp.py`: creates a client-side TCP connection
- `ICM20948.py`: contains the procedure to extract and filter data from IMU
- `Message.py`: a library containing functions to create strings of data to be sent to tablet/surface
- `ms5837.py`: defines functions and methods used to read and process data from the depth sensor
- `server_udp.py`: creates a server-side UDP connection
- `udp_acustic.py`: creates a UDP connection to simulate the USBL acoustic communication
- `utilities.py`: contains classes and methods used in communication modules of other libraries.

2.2.4 RPi4 Environment Setup

During the RPi4 setup, the first issue was the selection of a proper OS to run on the board.

We tried to install the following OS, in order:

1. *Ubuntu 64-bit* (latest version 2021) - Raspberry was crashing on boot with and without the sensors. We tried another Raspberry board: the results were the same
2. *Linux Manjaro* – It was resource-consuming and gave some problems with Security Keys
3. ***Raspbian Bullseye* x64** – It worked perfectly, fast on boot up, and well supported for Raspberry since it's developed for this device.

The last point was performed using the *Pi Imager* program obtained from Raspberry's official website to download and install *Raspbian Bullseye 64-bit* version to a 16 GB MicroSD.

It was important to enable SSH using PI Imager so we could have access to running the OS for the first time through a Wi-Fi network.

The terminal `raspi-config` command was used to enable I2C, GPIO, VNC, SSH mode on boot.

Setting static IP for Wi-Fi (wlan0) interface: 192.168.1.128

After that, the installation of the correct **Python version** followed: firstly, version 3.7.0 was tested, failing due to old system libraries being not supported; then **2.7.0** was found working, so the general code was executed with this interpreter version. After that, proper **Python libraries** were installed.

2.2.5 Components Setup

Router setup

To set up the **Netgear EX6120 extender** we had to remove all unnecessary parts to connect it to the output of the 3V Buck Step Down and attach the antennas as in Figure 3.

Wifi Setup parameters implemented:

- 5G Disabled
- Name: *DiveSafe*_AP
- Wi-Fi Password: Labmacs01
- Login: labmacs@mail.com
- Password: Labmacs21
- Static IP: 192.168.1.250

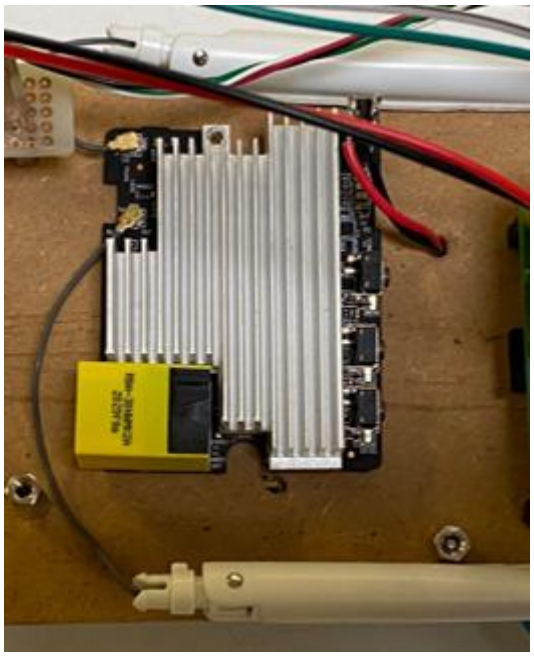

Figure 5 - Router Netgear

Buck Converter Setup

To set up the Buck Converters we used a Multimeter and a screwdriver to regulate the potentiometer and to obtain the required output voltage (3.3V for the one shown above, and 5V for the one below in Figure 6).

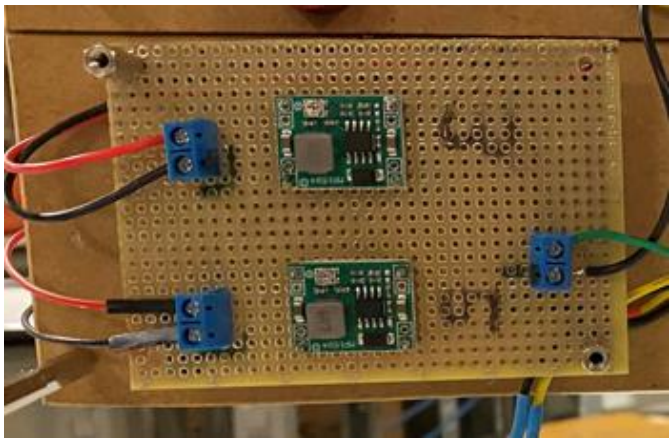

Figure 6 - Buck Converters

OpenUPS2 Setup

To set up the OpenUPS2 we have first updated the official firmware to the last available version getting the file from the official site of the manufacturer.

This procedure consisted in:

- Enter in bootloader mode shorting connection between P4.4 and P4.5, then connect the unit to the USB port
- Start the `HIDBootLoader.exe` software provided by the producer to flash the new firmware
- Locate the hex file for LifePO4 and open it
- Run the update and after the device reconnects on USB the new version of firmware is installed.

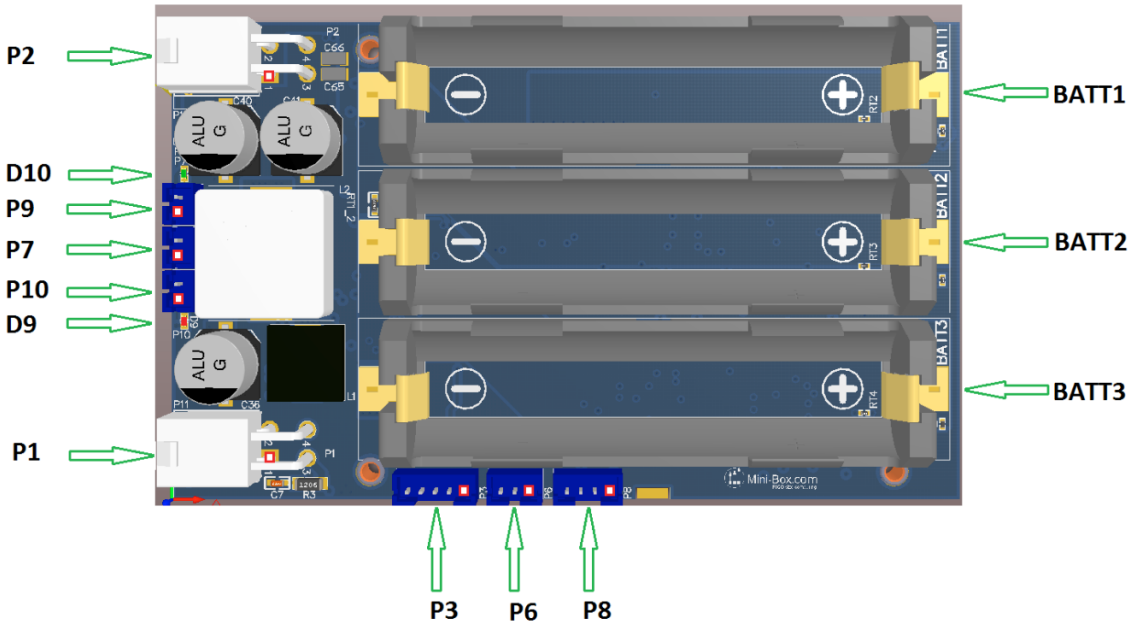

Figure 7 - OpenUPS2 diagram [11]

2.3 User interface

In this section, we are going to describe the user interface of the proposed system and the operational environment for its validation and test.

All the tests were executed in the laboratory and we used different software provided by DiveSafe.

List of software involved in the testing:

1. Mission Manager for Windows OS
2. Main_PC emulates USBL
3. Navigation App (Divy – *DiveSafe* v1.5.4) for Android

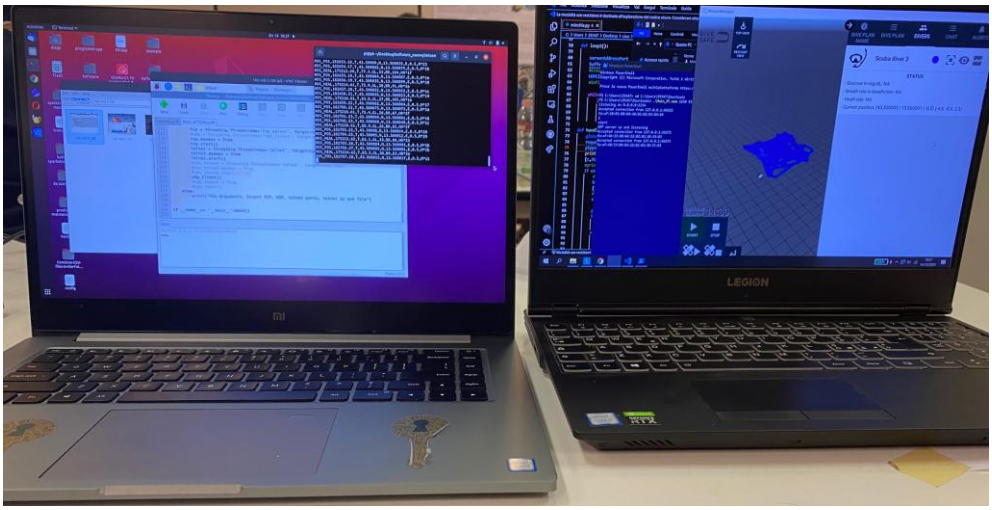

Figure 8 - Main PC and Tablet simulation

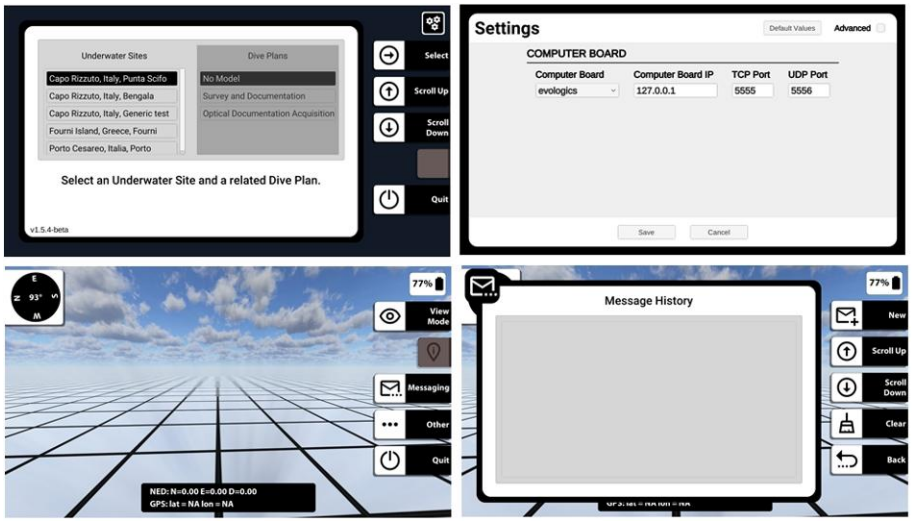

Figure 9 - User point of view (Navigation App)

We initially tested all the sensors using manufacturers' scripts/programs to verify compatibility with Raspberry Pi 4.

The testing procedure of the system is defined in chapter 7.

3 Technical evaluation of the project

3.1 Methodological framework for validation (TCs, TPs)

The deliverable includes the methodology and the planning of all validation activities.

The Validation plan here defined refers to the validation of hardware parameters and the performance of the hardware in the loop. The Key Performance Indicators (KPIs) used in this project are strategic for validation. The technical evaluation and the methodological framework (TCs, TPs) require the assessment of the subsystem functionality, which consists of Docking Station fundamental components and behaviors:

1. Router
2. UPS module
3. Raspberry Pi module
4. Electrical switch
5. Wirings
6. Communication

The integrated product was verified and validated, in the lab, through the following **Factory Acceptance Tests**:

- **TC1**: Battery endurance
  - TP 1.1: Battery endurance with Docking Station working with dummy software. Results: ko, acceptable, ok.
- **TC2**: Router network stability
  - TP2.1: Wi-Fi connection with the Raspberry without any issues. Results: ko, acceptable, ok.
- **TC3**: Electric stability
  - TP3.1: Check that after 60 min of operation with dummy software there are no damaged components or electrical problems. Results: ko, acceptable, ok.

- **TC4**: I2C Communication (testing the sensors running the scripts from the official libraries)
  - TP 4.1: Data logged from IMU. Results: ko, ok.
  - TP 4.2: Data logged from depth/temperature sensor. Results: ko, ok.
- **TC5**: TCP/UDP communication (testing the communication between the Raspberry, the Mission Manager (MM), and the Navigation App (NA))
  - TP 5.1: Visualizing the path on the MM. Results: ko, acceptable, ok.
  - TP 5.2: Visualizing the path on the NA. Results: ko, acceptable, ok.
  - TP 5.3: Send 10 chat messages from NA to MM and verify message integrity. Results: ko, acceptable, ok.
  - TP 5.4: Send 10 chat messages from MM to NA and verify message integrity. Results: ko, acceptable, ok.

In the following table are defined the results “ko”, “acceptable” and “ok” for each test procedure.

Test Procedure	ko	acceptable	ok
TP 1.1	The battery life is less than 1 h	The battery life is more than 1 h but less than 3 h	The battery life is more than 3 h
TP 2.1	The connection stability lasts less than 30 min	The connection stability lasts more than 30 min but less than 2 h	The connection stability lasts more than 2 h
TP 3.1	The DS is damaged	The DS is not damaged	The DS is not damaged, and the temperature of the system is less than 50°C
TP 4.1	The data is not transmitted	--	The data is transmitted

TP 4.2	The data is not transmitted	--	The data is transmitted
TP 5.1	The path isn't visible	The path is visible for at least 30 min	The path is visible for more than 30 min
TP 5.2	The path isn't visible	The path is visible for at least 30 min	The path is visible for more than 30 min
TP 5.3	More than 5 messages are not coming to the MM	Less than 4 messages are not coming to the MM	All the messages arrive at the MM
TP 5.4	More than 5 messages are not coming to the NA	Less than 4 messages are not coming to the NA	All the messages arrive at the NA

The main objective of validation is to demonstrate that the system is suitable for its targeted/intended purpose and operates smoothly and reliably. The goal is to evaluate if the system can perform and complete real-time validation tasks safely and efficiently, providing valuable help to divers and allowing them to efficiently conduct underwater missions. The validation plan aims to confirm the TRL4 level and to ensure that the system is ready for future updates.

3.2 Validation Plan Schedule

According to the Gantt schedule, the test procedures took place in the final phase of the work.

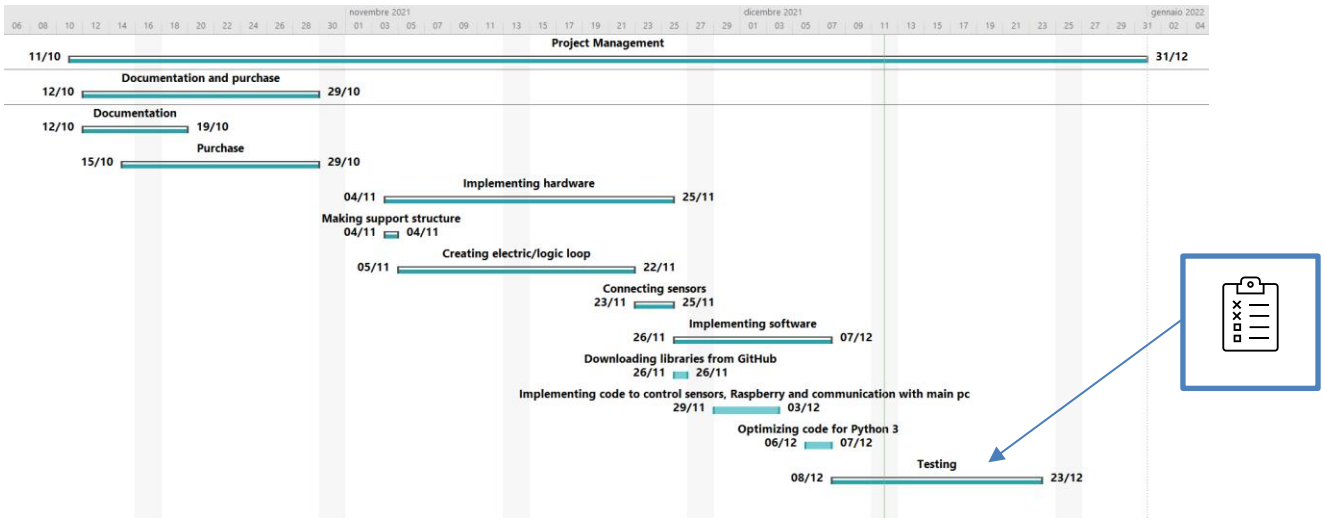

Figure 10 - Gantt

All the tests were made in the dry lab environment on the following dates:

Test Case	Date
TC1	10/12/2021
TC2	10/12/2021 – 14/12/2021
TC3	10/12/2021 – 14/12/2021
TC4	10/12/2021
TC5	10/12/2021 – 14/12/2021

Some of the Test Cases were repeated at different times. The TC2 and TC3 were repeated to ensure network stability and electrical stability. On 10/12/2021 the TC5 gave an unsatisfactory result, and because of that, it was repeated.

The validation plan starts from the hardware evaluation, with the test cases TC1-TC2-TC3-TC4 and it continues with the communication procedures evaluation with the test TC5. The positive results of the test are to demonstrate the efficiency of the system performances in the dry lab environment and to confirm the TRL 4 level.

3.3 Safety criteria and indicators

The system needs to be safe in terms of electrical and thermic conditions. The safety conditions are ensured by the test case TC3 ("electric stability") about the electrical wirings. The result of the tests, made on 10/12/2021 and 14/12/2021, are positive, and this means that the system is safe in terms of electrical and thermic conditions. The security conditions are obtained by satisfying the test cases TC4 ("I2C communication") and TC5 ("TCP/UDP communication"), analyzing if the warning and alarm messages are received.

3.4 KPI for the system

KPIs were defined according to the general required functioning of the Docking Station components, mainly electrical safety and messages and data integrity.

The results of TCs are intended to demonstrate the alignment between KPIs defined and actual work performance.

Subsystem	Component	Function	KPI Code	KPI	Threshold
DS	**1. Router**	1.1 - Router network setup and visibility to close devices	**1.1**	**DS_R_StartTime**	< 40 s
	2. UPS Module	2.1 – stays on and operative for a certain time	**2.1**	**DS_UPS_BatteryTime**	> 1 h
		2.2 – Battery recharge	**2.2**	**DS_UPS_BatteryRec**	< 3 h
	3. Raspberry Pi Module	3.1 – Network connection time is acceptable	**3.1**	**DS_RPI_NetConn**	< 40 s
	4. Electrical switch	4.1 – voltage drop is limited	**4.1**	**DS_SWI_VD**	< 0.1 V
	5. Wirings	5.1 – temperature reached is adequate	**5.1**	**DS_W_Temp**	< 60 °C
	6. Communication	6.1 Send and receive messages from Mission Manager	**6.1**	**DS_MM_Chatdataloss**	< 10%

3.5 Indicators for End-User/Stakeholder acceptance and evaluation

Even if the TRL4 does not involve end-users who use the system, a questionnaire has been developed to receive preliminary feedback on the functioning of the system.

The user indicators are grouped into six categories:

1. General Indicators for User Satisfaction
2. Usability Indicators
3. Understandability Indicators
4. User Friendliness Indicators
5. Impact assessment Indicators
6. Marketability Indicators

General Indicators for User Satisfaction

	Insufficient	**Adequate but needs improvements**	**Normal**	**Good**	**Excellent**
1. How do you evaluate the size and weight of the docking station?					
2. How do you evaluate the speed of the message communication?					
3. How do you evaluate the wealth/value of functionalities?					

Usability Indicators

	Strongly Agree	Agree	Neutral	Disagree	Strongly Disagree
1. How do you evaluate the speed of booting up the system?					
2. How do you evaluate the connection speed with the router?					
3. Navigation app loads data/information very fast.					
4. There's no loss of messages.					
5. Is the entire system safe for living life/humans?					

Understandability Indicators

	Strongly Agree	Agree	Neutral	Disagree	Strongly Disagree
1. I understand immediately how to turn on the Docking Station					
2. It is clear how to start the software in the laptop					
3. Display of alert messages is clear and helps the diver to get support from the team.					

User Friendliness Indicators

	Strongly Agree	Agree	Neutral	Disagree	Strongly Disagree
1. I can perceive *DiveSafe* errors as helpful					
2. The messaging feature is user-friendly.					
3. The entire Docking Station use is user friendly					

Impact assessment Indicators

	Very high	High	Neutral	Low	Very low
1. What is your overall impression of the degree of user productivity?					
2. How do you rate the degree of completeness of the new Docking Station?					
3. How useful is the system?					

Marketability Indicators

	A lot	Enough	Normal	Little	Not at all
1. How fun is the use of the system?					
2. How easy is it for the user to become familiar with the infrastructure?					
3. The entire system is portable.					
4. The optimized space is done very well.					
5. The optimized cost for the new docking station is great.					

Do you think a user can invest in the new optimized docker station?

- ☐ Yes
- ☐ No

How much can a user invest in the new docking station?

- ☐ 700 €
- ☐ 1000 €
- ☐ 2000 €
- ☐ 3000 €
- ☐ More than 3000 €

4 Validation Plan results

The KPIs defined in the previous section were verified with the test procedures.

The tests done on 10/12/2021 gave the following results:

Test Cases	Test Procedures	Result	Test Environment
TC1	TP1.1	ok	Dry Lab
TC2	TP2.1	acceptable	Dry Lab
TC3	TP3.1	ok	Dry Lab
TC4	TP4.1	ok	Dry Lab
	TP4.2	ok	Dry Lab
TC5	TP5.1	ok	Dry Lab
	TP5.2	ko	Dry Lab
	TP5.3	ko	Dry Lab
	TP5.4	ko	Dry Lab

Not all the results were positive, so some tests procedures were repeated on 14/12/2021.

The code *Main_RPi4* was updated and the connection between the Raspberry and the router was improved. The following table represents the result of the test procedures done on 14/12/2021:

Test Cases	Test Procedures	Result	Test Environment
TC1	TP1.1	ok	Dry Lab
TC2	TP2.1	ok	Dry Lab
TC3	TP3.1	ok	Dry Lab
TC4	TP4.1	ok	Dry Lab
	TP4.2	ok	Dry Lab
TC5	TP5.1	ok	Dry Lab
	TP5.2	ok	Dry Lab
	TP5.3	ok	Dry Lab
	TP5.4	ok	Dry Lab

The test results are all positive and therefore the system meets the required performances.

5 Final conclusions and future improvements

The project work started from the *DiveSafe* European project to reduce the cost of the *Low-Cost* Docking Station leaving the performance of the system unchanged. The main challenge was to adapt the hardware support of the Docking station to the Raspberry Pi4 with the *DiveSafe* software. The tasks to be performed by the Docking Station are:

- Communication with the Mission Manager
- Communication with the Navigation App
- Receive the data from the IMU sensor
- Receive the data from the depth sensor

The realized Docking Station preserves space and money by replacing the *Nvidia Jetson TX2* board with a Raspberry Pi 4B and the *X-Sense* IMU with a cheaper one. The result is a more economic and low-power Docking Station providing the same performance as the Dive Safe Docking Station.

The TRL level obtained is 4. To increase the TRL level some improvements can be implemented, such as to:

- reinforce support by changing material and making the structure waterproof
- set the run of the code Main_Rpi4 on the boot of the Raspberry
- update the code from Python 2 to Python 3
- simulate the system in a Wet Lab environment

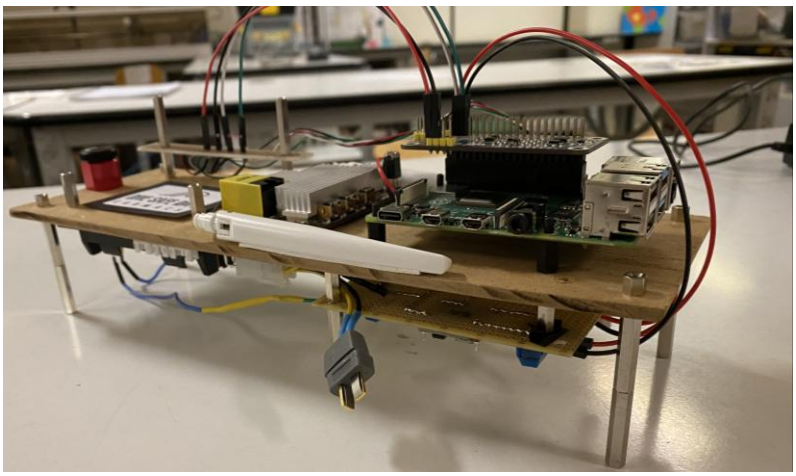

Figure 11 - Assembled DS

6 Bibliography

[1] "DiveSafe," 2021. [Online]. Available: https://divesafe.eu/.

[2] D. Scaradozzi, N. Ciuccoli, A. Pugliese, V. Bartolucci, S. M. Egi, M. Memişoğlu and T. Özyiğit, "A novel DPV as a holistic platform for real-time physiological status assessment of divers," *29th Mediterranean Conference on Control and Automation (MED),* 2021.

[3] D. Scaradozzi, S. Zingaretti, L. Panebianco, C. Altepe, M. Palma, U. Pantaleo and F. Micheli, "DocuScooter: A novel robotics platform for marine citizen science," *THE PROCEEDINGS OF THE ... INTERNATIONAL OFFSHORE AND POLAR ENGINEERING CONFERENCE,* 2017.

[4] D. Scaradozzi, S. Zingaretti, L. Panebianco, N. Ciuccoli, L. Screpanti, L. Cesaretti, D. Costa and G. Palmieri, "The Lab4Dive project: A mobile smart lab for augmented archaeological dives - Overview and first results," 2019.

[5] T. Ozyigit, S. Satir, S. M. Egi and M. Memişoğlu, "DEVELOPMENT OF A WIRELESS PRESSURE SENSOR MODULE TO CONVERT THE MOBILE PHONES INTO DIVE COMPUTERS," *Selcuk University Journal of Engineering Science and Technology,* 2019.

[6] S. M. Egi, A. Corentin, M. Pieri, D. R. Sinoplu, D. Cialoni, T. Özyiğit, P. Pierleoni and A. Marroni, "Design and Implementation of an Underwater Telemetric Glucose Monitoring System for Scuba Divers," *HITTITE JOURNAL OF SCIENCE AND ENGINEERING,* 2018.

[7] A. Corentin, S. M. Egi, T. Ozyigit and P. Pierleoni, "Nerites - Underwater Monitoring System of Diver's Respiration and Regulator Performance using Intermediate Pressure Signal," 2016.

[8] A. Corentin, S. M. Egi, T. Ozyigit, D. R. Sinoplu, A. Marroni and P. Pierleoni, "Design and Validation of a Breathing Detection System for Scuba Divers," *SENSORS,* 2017.

[9] F. Bruno, A. Lagudi, M. Muzzupappa, M. Lupia, G. Cario, L. Barbieri, S. Passaro and R. Saggiomo, "Project VISAS: Virtual and Augmented Exploitation of Submerged Archaeological Sites-Overview and First Results," *Marine Technology Society Journal,* 2016.

[10] D. Scaradozzi, L. Sorbi and F. Zoppini, "DiRAMa facilitates data gathering and analysis at sea system creates 3D images using data gathered from mobile devices," *SEA TECHNOLOGY,* 2014.

[11] "OpenUPS2," [Online]. Available: http://wiki.mini-box.com/index.php?title=OpenUPS2.

7 Appendix 1 – Testing instructions

The procedure for testing the system is as follows:

1. Turn on the power switch and wait for 30 seconds for the router and Raspberry to start
2. After correctly confirming the start by looking at the LEDs of Raspberry and Router the main script is to load and run
3. Connect an Ethernet cable from a Windows PC equipped with Mission Manager to Raspberry and start the session using the Windows shell command to emulate the USBL:

```
Main_PC.exe 1234 5556 192.168.0.128
```

4. Connect a PC to the Raspberry through SSH connection and run the command below to start the system:

```
python2 Main_RPi4.py  11999 20001 192.168.0.111
```

5. Run Divy – *DiveSafe* from an Android tablet configured as shown in Figure 9 and start the simulation
6. Start the Mission Manager App on PC
7. Test the message communication: send a message from tablet to PC and check if the message is received correctly. Later, check the message communication from the PC to the tablet.
8. Test if the docking station is sending data about the position (DS_POS) and heal (DS_HEAL) to the Navigation App (tablet) and Mission Manager (PC)
9. Test the system and the connection stability: Let the system operate for at least one hour

In the figurer below two test simulations are shown. The path on the tablet is equivalent to the path on the Mission Manager App. hence the test is successful.

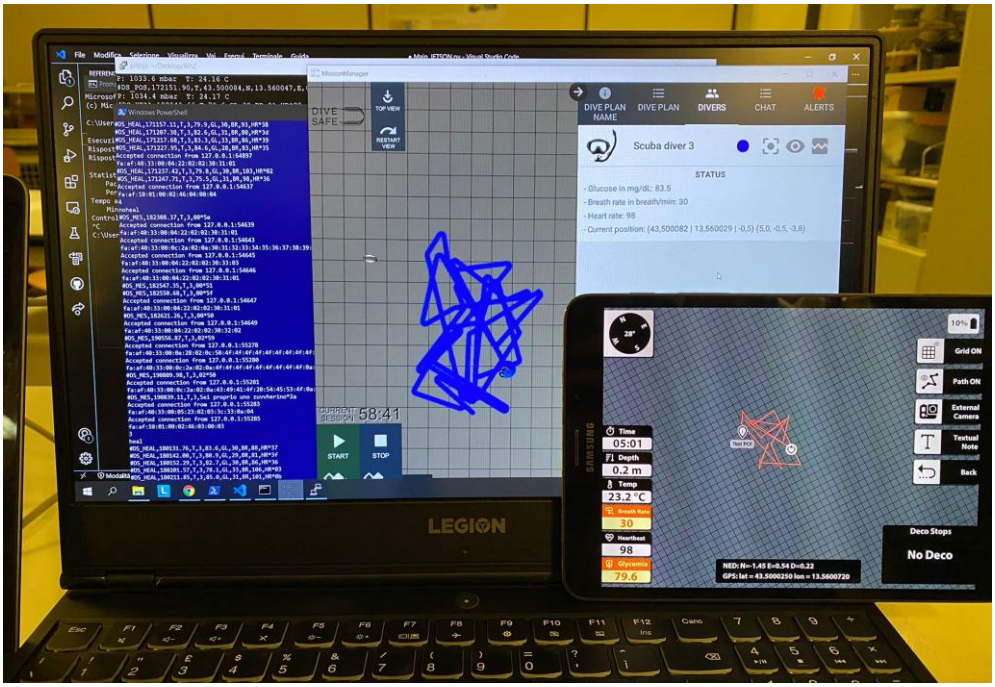

Figure 12 – System simulation

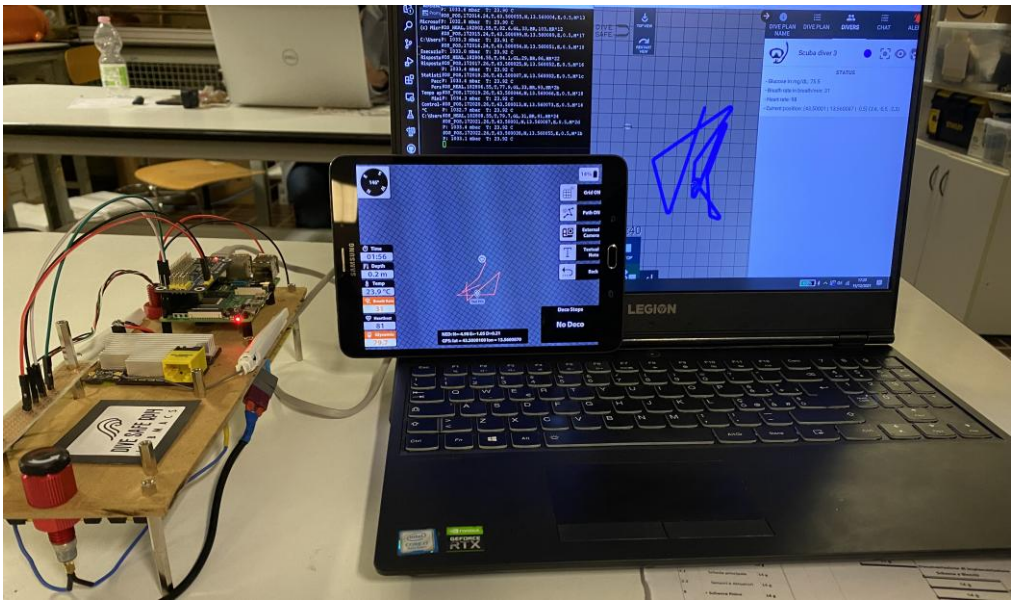

Figure 13 – System simulation

8 Appendix 2 - Directories and files organization

This appendix reports the software directories and files summary and relative links to GitHub.

Link to GitHub repository: https://github.com/LabMACS/1_RPI_DS_MODEM

Dummy2	Update
Main_PC	Update
MissionManager_1.5.6/MissionMana...	Update
R&D	Update
RPi4	Update
Report	Create modello report.thmx
.DS_Store	Update simulazione ed invio dati ad arduino
Gantt.pdf	Create Gantt.pdf
README.md	Update README.md

Figure 14 - GitHub project directory

The repository contains the folders:

- *Dummy2*: for testing without components/sensors attached.
- *Main_PC*: for USBL simulation
- *MissionManager_1.5.6*: software for simulation
- *R&D*: for research and development
- *RPi4*: main code for docking station (Raspberry Pi4 in python 2)
- *Report*: contains weekly/monthly reports
- Gantt chart and *Readme* are also included.

9 Appendix 3 - Bill of materials

In the following table, the bought components are presented.

Component	Price [€]	Link
Raspberry Pi 4 Model B	80,00	https://www.raspberrypi.com/products/raspberry-pi-4-model-b
Netgear EX6120	45,00	https://www.netgear.com/home/products/networking/wifi-range-extenders/EX6120.aspx
OpenUPS2	109,00	https://www.cartft.com/catalog/il/1821
18650 LiFePO4 Batteries	30,00	https://it.rs-online.com/web/p/batterie-a-dimensionispeciali-ricaricabili/8183005
MP1584 Buck/ Step Downs	2,00	https://robu.in/product/mini-mp1584-dc-dc-adjustablebuck-module-3a/
Blue Robotics Depth Meter	64,00	https://bluerobotics.com/store/sensors-sonarscameras/sensors/bar30-sensor-r1
Sensehat Waveshare Bcm2835	25,00	https://www.waveshare.com/sense-hat-b.htm
TOTAL	355,00	

Other materials, like the support, glue, screws, wirings, soldering material were available in the lab and therefore have not been included in the total amount although they should be considered in case the system needs to be rebuilt.