CM5 CONNECTORS

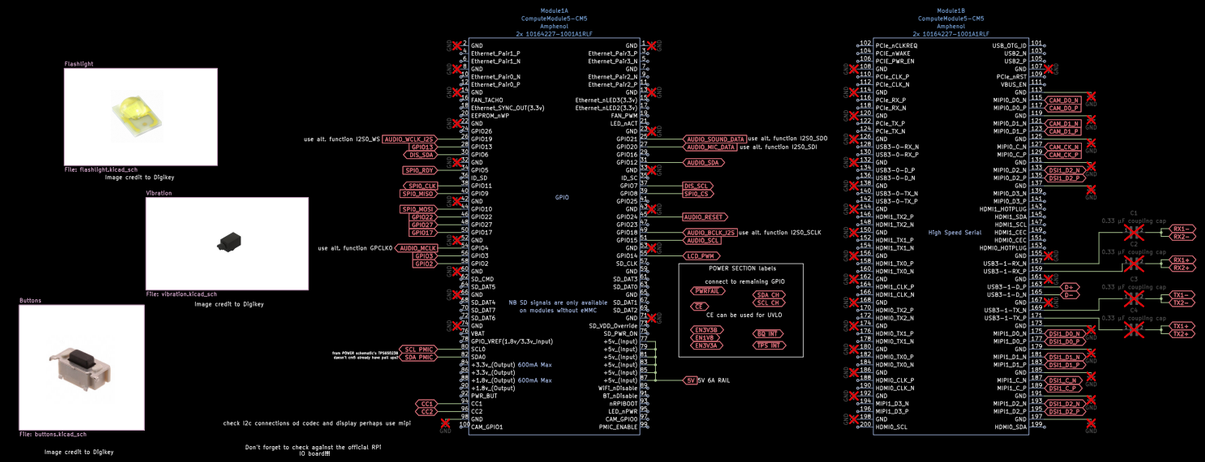

Flashlight

File: flashlight.kicad_sch

Image credit to Digikey

Vibration

File: vibration.kicad_sch

Image credit to Digikey

Buttons

File: buttons.kicad_sch

Image credit to Digikey

Screen

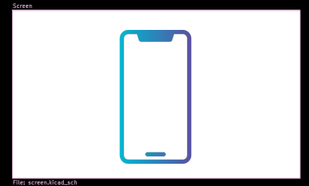

File: screen.kicad_sch

Icon by lalawidi from FlatIcon

USB C

File: USB-C.kicad_sch

Icon by zkuiIcon from FlatIcon

Camera

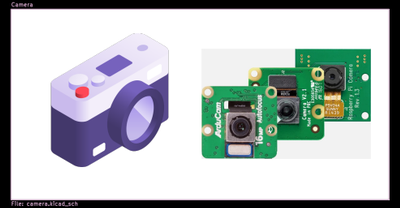

File: camera.kicad_sch

Icon by Freepik from FlatIcon

Image credit to Arducam

Fingerprint

File: fingerprint.kicad_sch

Icon by MeaIcon from FlatIcon

Other

make sure the connector is in the
correct position relative to the screen (like in case of the camera).
Also make sure the cable doesn't have to bend to much

these pins need to be
connected to any remaining
GPIO. they are not super important

JACK-IN

CAM_IOO

Power

File: power.kicad_sch

Icon by Freepik from FlatIcon

Audio

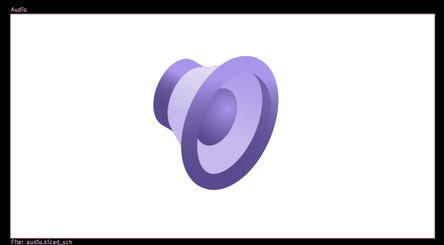

File: audio.kicad_sch

Icon by Freepik from FlatIcon

GSM-GPS

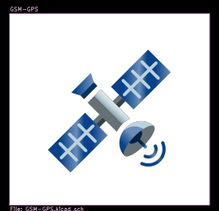

File: GSM-GPS.kicad_sch

Icon by Wendy-G from FlatIcon

USB C 3.2→4.0

(Iphone 16 uses 2.0 XD)

resistors are not needed in case of the CC pins because the cm5 already takes care of the negotiation/role assignment

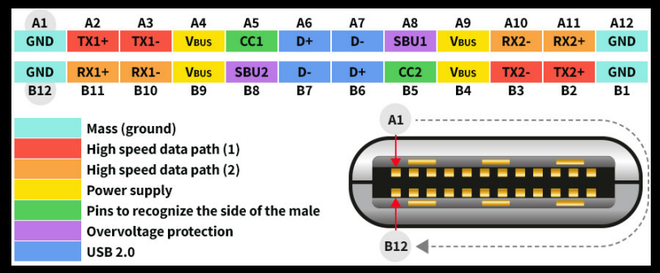

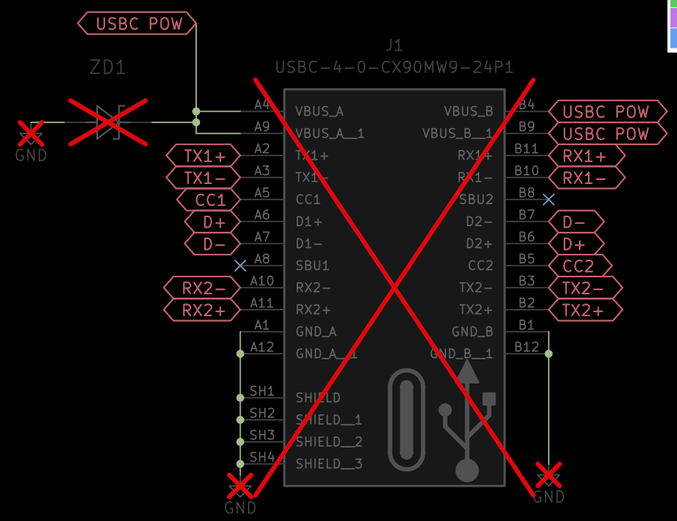

USB C protection:

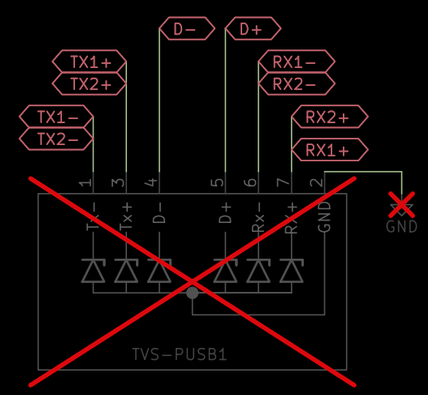

Sheet: /USB C/
File: USB-C.kicad_sch

Title:

Size: A4	Date:	Rev:
KiCad E.D.A. 9.0.0		Id: 2/11

Screen

DIS1

https://www.nxp.com/docs/en/supporting-information/RK055AHD091-CTG.pdf

Sheet: /Screen/
File: screen.kicad_sch

Title:

Size: A4	Date:	Rev:
KiCad E.D.A. 9.0.0		Id: 3/11

GSM & GPS

Take care when choosing variants for different continents

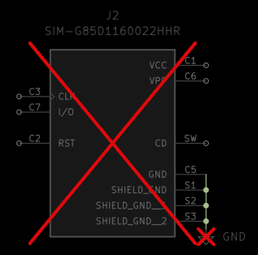

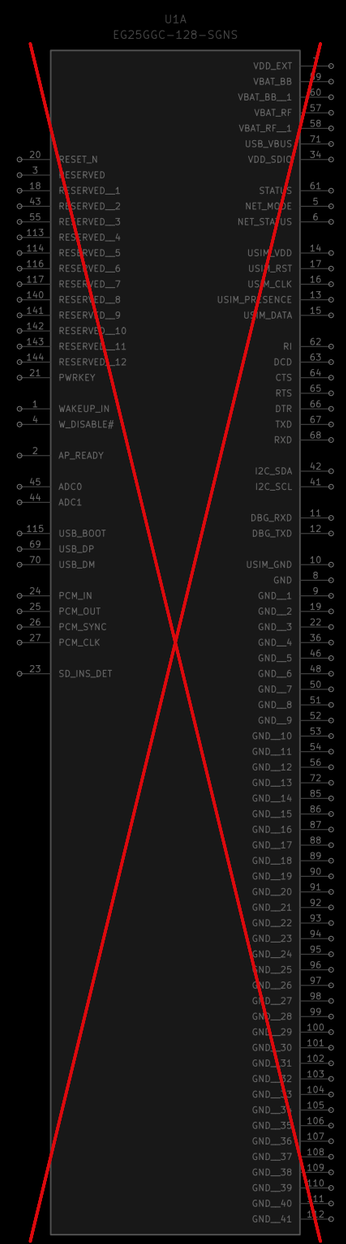

need to be careful if 128 and 256 symbols and footprints are identical

TODO rename them and double check

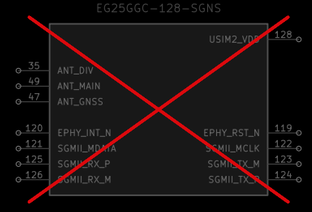

Sheet: /GSM-GPS/
File: GSM-GPS.kicad_sch

Title:

Size: A3 | Date: | Rev:

KiCad E.D.A. 9.0.0 | Id: 4/11

Fingerprint

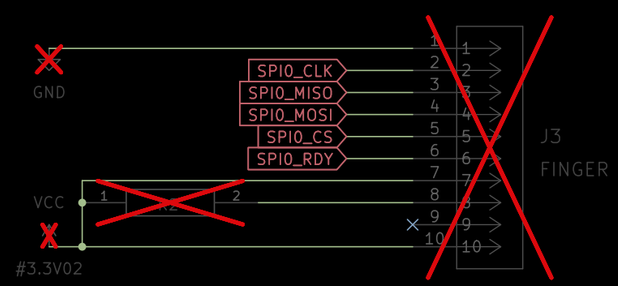

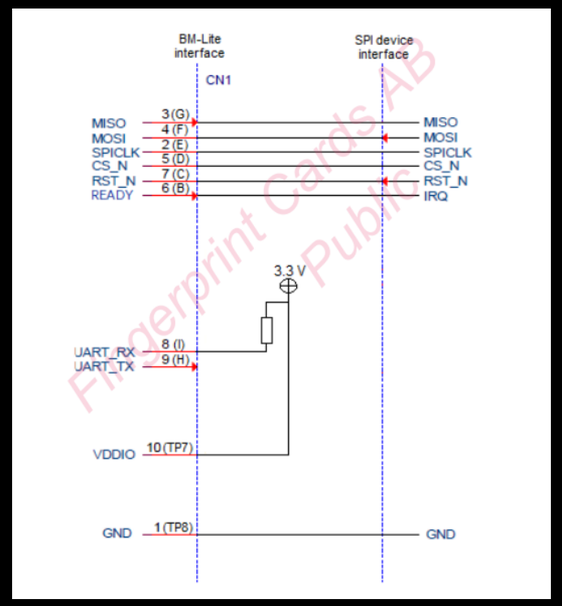

- **SPI0 (primary SPI bus):**
  - **MOSI (Master Out Slave In)** → GPIO 10 (physical pin 19)
  - **MISO (Master In Slave Out)** → GPIO 9 (physical pin 21)
  - **SCLK (Clock)** → GPIO 11 (physical pin 23)
  - **CE0 (Chip Select 0)** → GPIO 8 (physical pin 24)
  - **CE1 (Chip Select 1)** → GPIO 7 (physical pin 26) pinout.xyz
- **SPI1 (alternate SPI bus):**
  - **MOSI** → GPIO 20 (physical pin 38)
  - **MISO** → GPIO 19 (physical pin 35)
  - **SCLK** → GPIO 21 (physical pin 40)
  - **CE0** → GPIO 18 (physical pin 12)
  - **CE1** → GPIO 17 (physical pin 11) (and CE2 on GPIO 16/pin 36) pinout.xyz

Sheet: /Fingerprint/
File: fingerprint.kicad_sch

Title:

Size: A4	Date:	Rev:
KiCad E.D.A. 9.0.0		Id: 5/11

Audio

35mm Jack should be ESD protected
come back to this task when USB 3.0 implemented

#5V02 #3.3V03#3.3V04#1.8V02
VCC VCC VCC VCC

CODEC & microphones

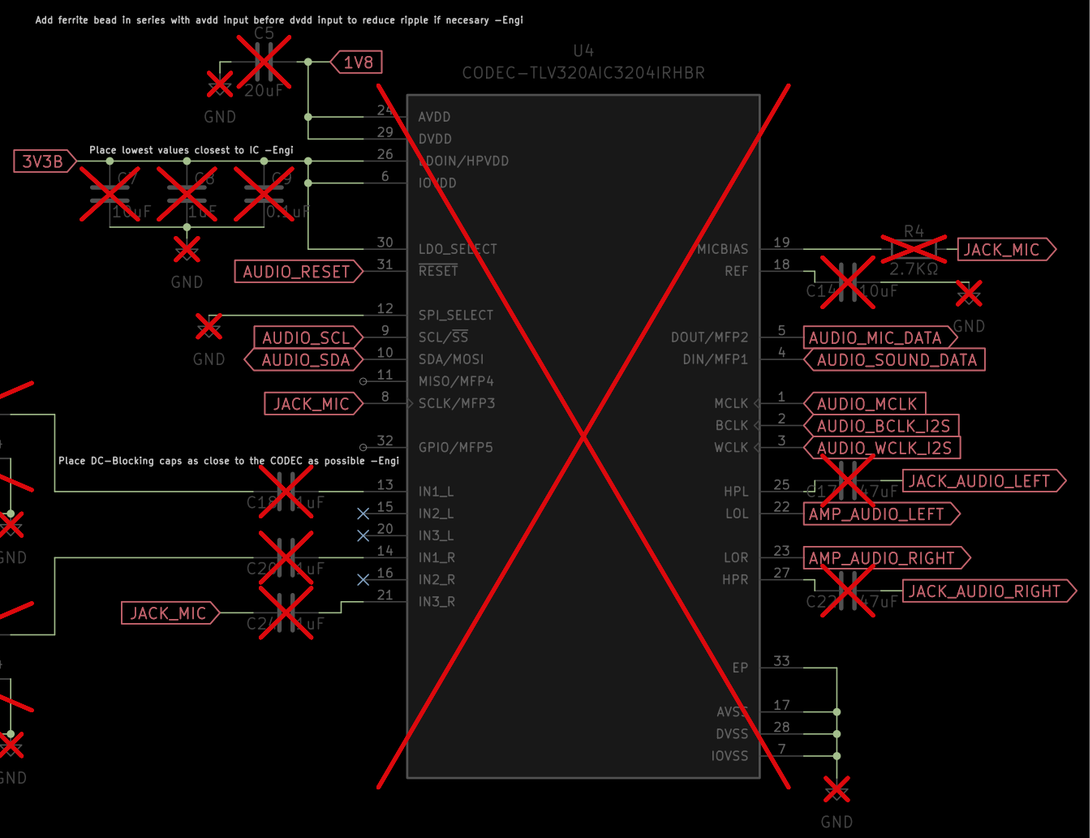

Audio amplifiers & speakers

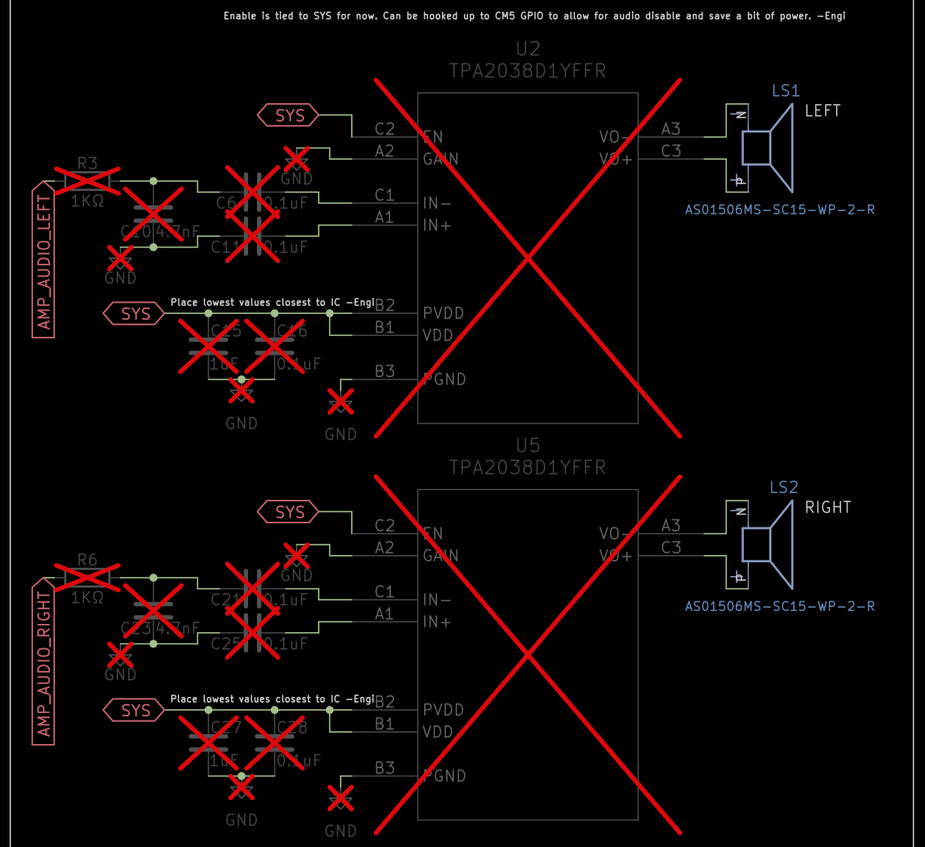

Headphone Jack

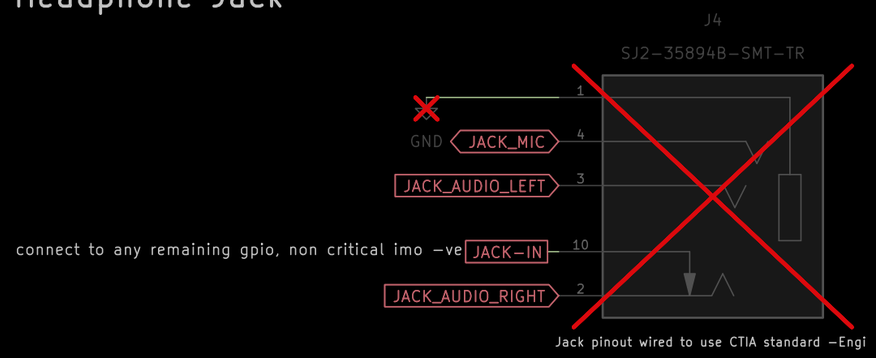

careful with the I2S protocol and look at the datasheet if implementing stereo mics (2 units)

Sheet: /Audio/
File: audio.kicad_sch

Title:

Size: A4	Date:	Rev:
KiCad E.D.A. 9.0.0		Id: 6/11

Power

Rails:

1x 22V
1x 5V
2x 3.3
1x 1.8

Total max current: 10.6A

CM5 SHOULD NOT BE CONNECTED DIRECLTY TO USBC POW!!!!
REMEMBER to implement UVLO !!!

DOUBLE CHECK ALL INDUCTOR VALUES CHOSEN
MAKE POWER BUDGET!!!
ADD TEST PADS!!!

Charger IC

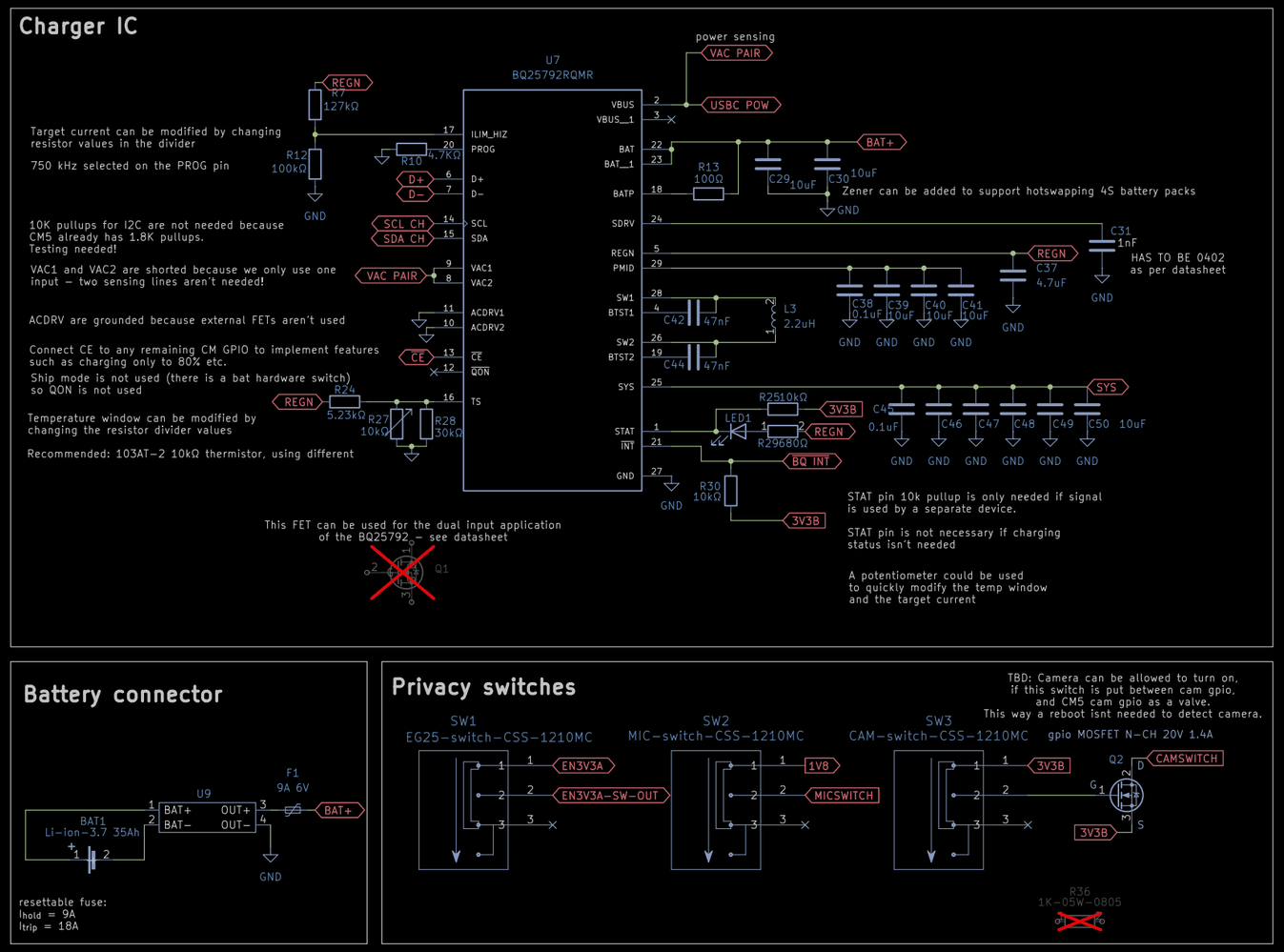

1V8 RAIL
3V3A RAIL
3V3B RAIL

LDOs are not in use currently

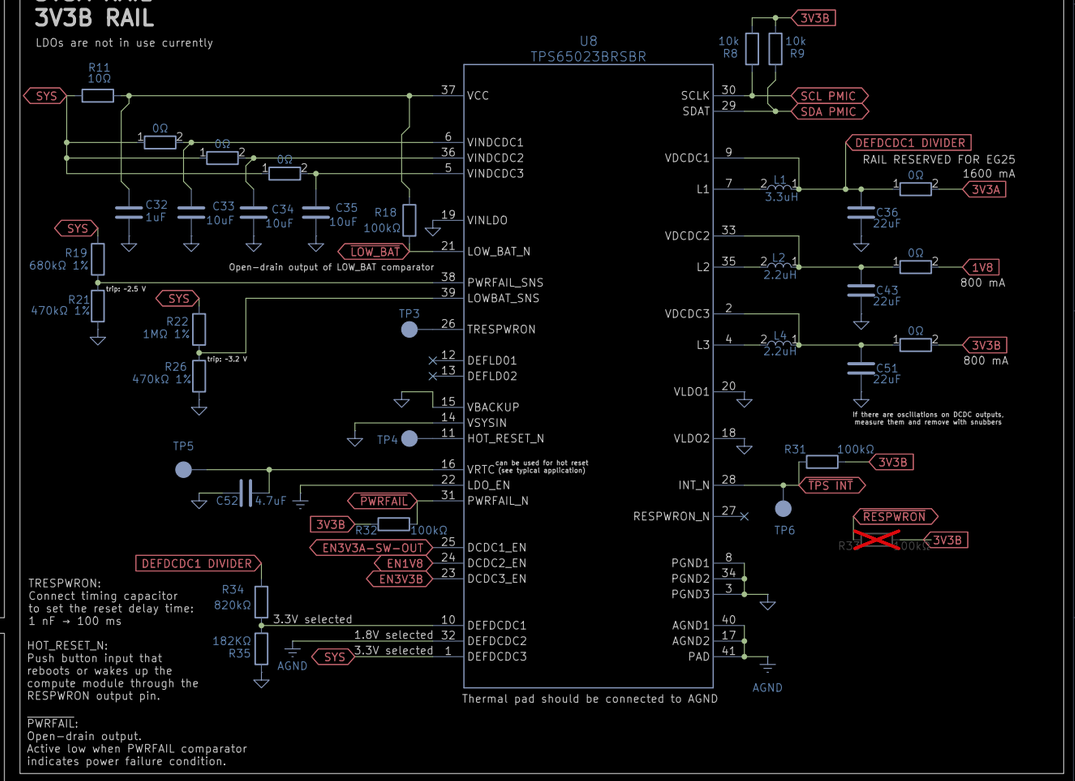

Battery connector

Privacy switches

LCD 22V 1.4A RAIL

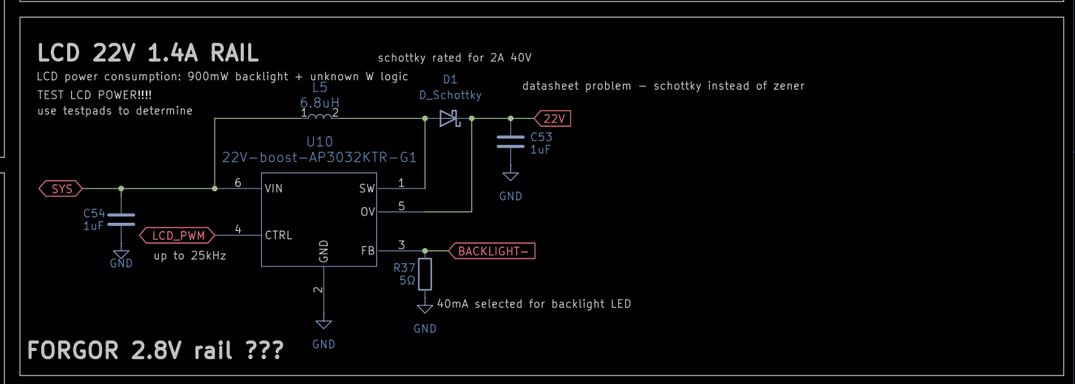

5V 6A RAIL

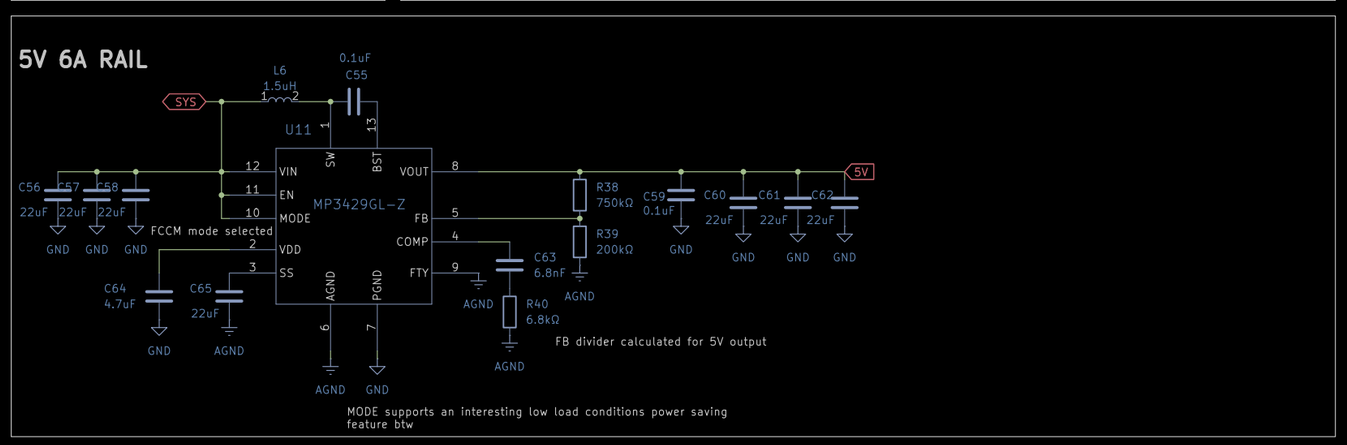

Place the transistors and other heat sensitive components on the back of the pcb so they can be heatsinked to the chasses aluminium

add DEMORKPISSY on PCB silkscreen

Sheet: /Power/
File: power.kicad_sch

Title:

Size: A3 | Date: | Rev:
KiCad E.D.A. 9.0.0 | Id: 7/11

Camera

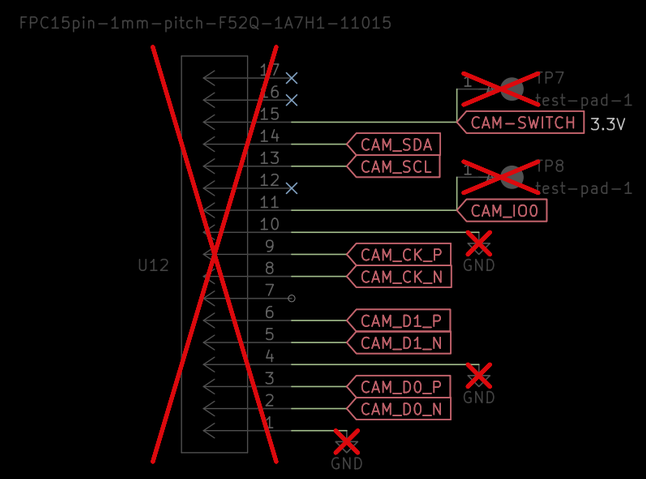

Sheet: /Camera/
File: camera.kicad_sch

Title:

Size: A4	Date:	Rev:
KiCad E.D.A. 9.0.0		Id: 8/11

BUTTONS

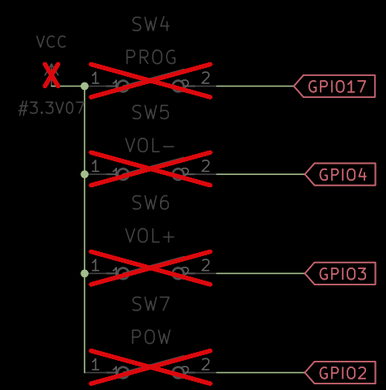

one GPIO can be used for all buttons, just use different value resistors for each button

Sheet: /Buttons/
File: buttons.kicad_sch

Title:

Size: A4	Date:	Rev:
KiCad E.D.A. 9.0.0		Id: 9/11

VIBRATION

cap in parallel with motor can be beneficial
(for noise, voltage smoothing)

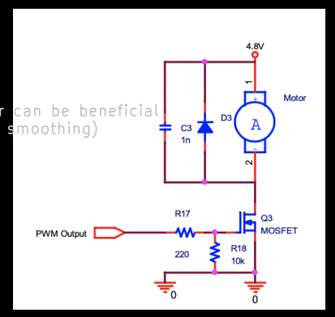

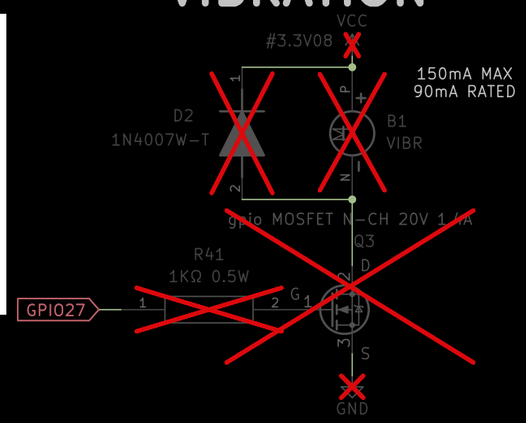

Sheet: /Vibration/
File: vibration.kicad_sch

Title:

Size: A4	Date:	Rev:
KiCad E.D.A. 9.0.0		Id: 10/11

FLASHLIGHT

should this LED have a series limiting resistor?

$$R = \frac{V_{supply} - V_F}{I}$$

this equation gives almost 0 Ohms so idk

the gate resistor can provide a "slow turn on" effect on the LED which can look cool (idk how to calculate the rise time)

Sheet: /Flashlight/
File: flashlight.kicad_sch

Title:

Size: A4	Date:	Rev:
KiCad E.D.A. 9.0.0		Id: 11/11