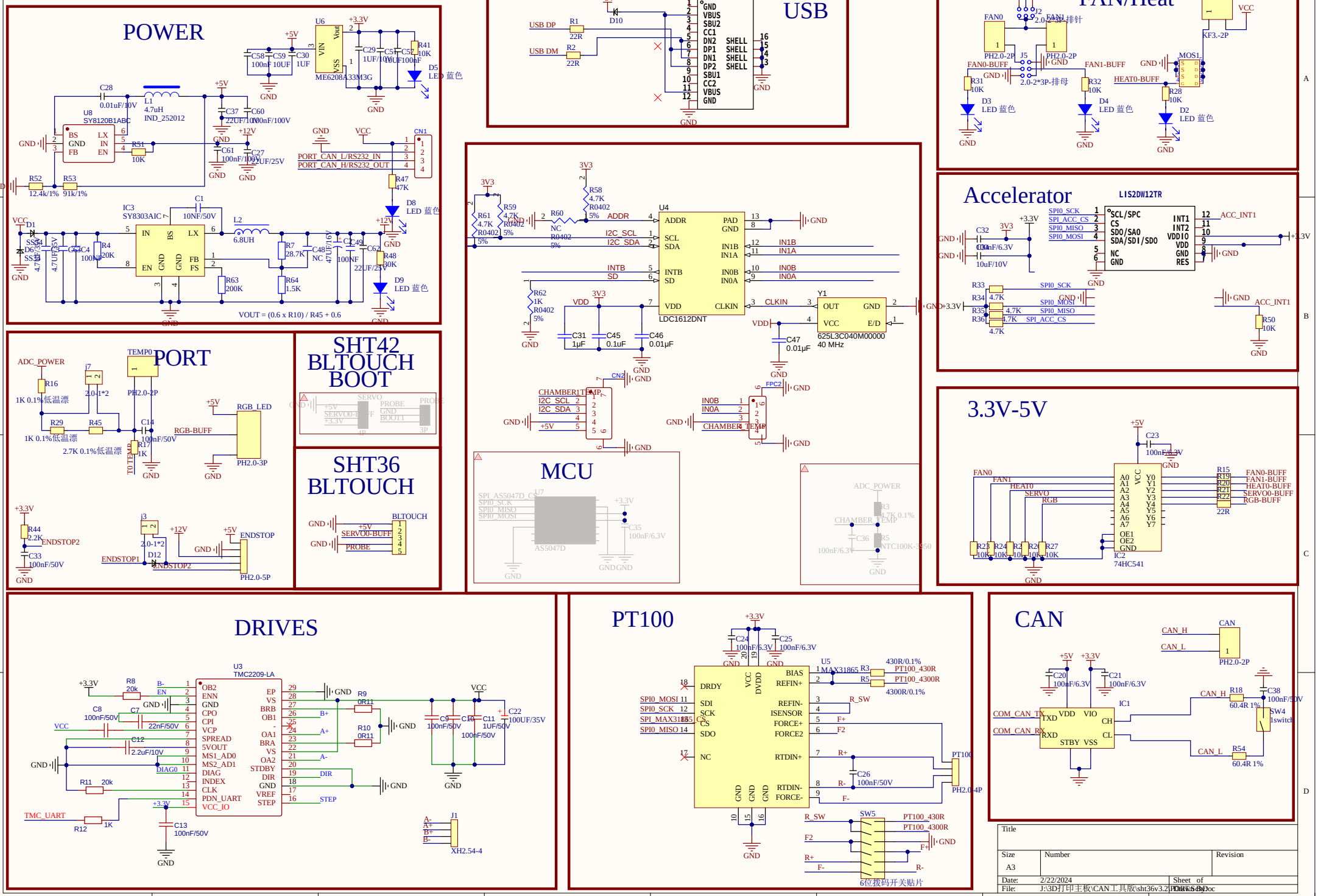
POWER
USB
FAN/Heat
Accelerator
LIS2DW12TR
PORT
SHT42 BLTOUCH BOOT
SHT36 BLTOUCH
MCU
3.3V-5V
DRIVES
PT100
CAN
VOUT = (0.6 x R10) / R45 + 0.6
Title
Size
A3
Number
Revision
Date: 2/22/2024
Sheet of
File: J:\3D打印主板\CAN工具版\sht36v3.2\PDRV5.3.Doc

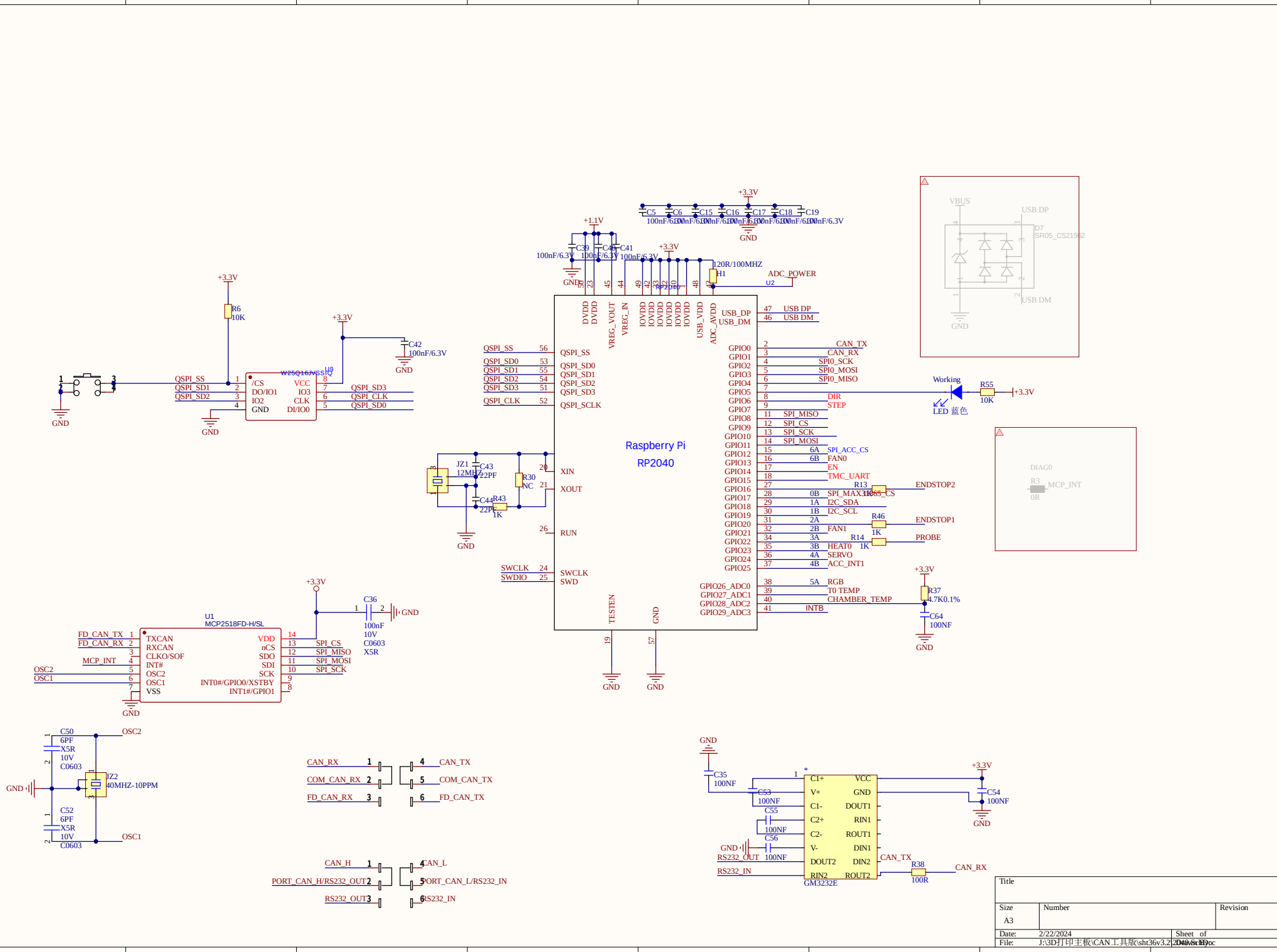
Raspberry Pi
RP2040
U1
MCP2518FD-H/SL
GM3232E
W25Q16JVSSIQ
+3.3V
+1.1V
GND
QSPI_SS
QSPI_SD0
QSPI_SD1
QSPI_SD2
QSPI_SD3
QSPI_CLK
SWCLK
SWDIO
XIN
XOUT
RUN
TESTEN
USB_DP
USB_DM
CAN_TX
CAN_RX
SPI0_SCK
SPI0_MOSI
SPI0_MISO
DIR
STEP
SPI_ACC_CS
FAN0
EN
TMC_UART
ENDSTOP2
SPI_MAX31865_CS
I2C_SDA
I2C_SCL
ENDSTOP1
FAN1
PROBE
HEAT0
SERVO
ACC_INT1
RGB
T0 TEMP
CHAMBER_TEMP
INTB
SPI_CS
SPI_MISO
SPI_MOSI
SPI_SCK
FD_CAN_TX
FD_CAN_RX
MCP_INT
OSC2
OSC1
COM_CAN_RX
COM_CAN_TX
CAN_H
CAN_L
PORT_CAN_H/RS232_OUT
PORT_CAN_L/RS232_IN
RS232_OUT
RS232_IN
Working
LED 蓝色
VBUS
USB DP
USB DM
D7
SR05_C521962
DIAG0
MCP_INT
ADC_POWER
120R/100MHZ
40MHZ-10PPM
Title
Size
A3
Number
Revision
Date:
2/22/2024
File:
J:\3D打印主板\CAN工具版\sht36v3.2_2040\sht36v3.2_2040.SchDoc