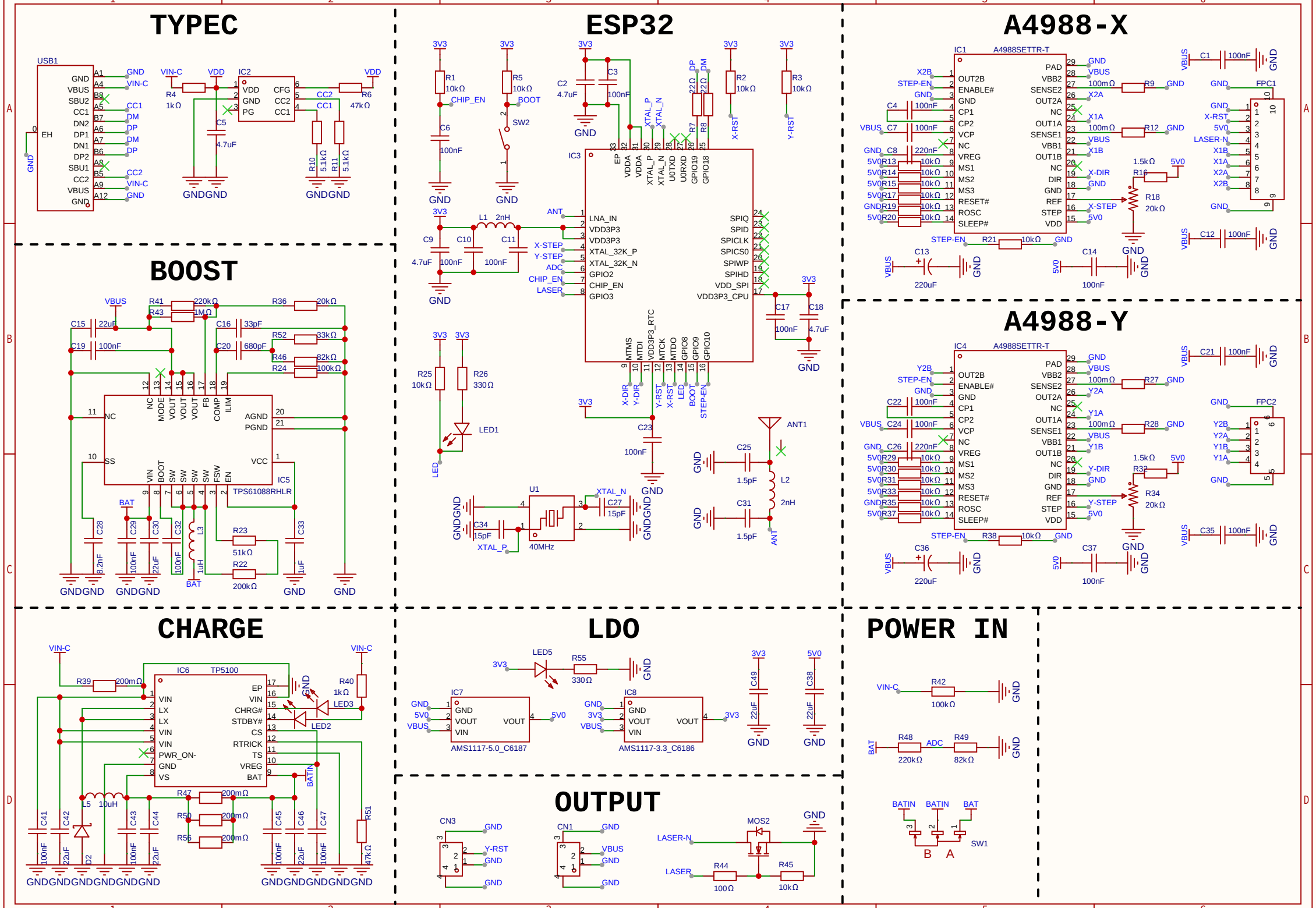
TYPEC
USB1
IC2
R4 1kΩ
C5 4.7uF
R6 47kΩ
R10 5.1kΩ
R11 5.1kΩ
ESP32
IC3
R1 10kΩ
R5 10kΩ
SW2
C2 4.7uF
C3 100nF
R2 10kΩ
R3 10kΩ
C6 100nF
C9 4.7uF
C10 100nF
C11 100nF
L1 2nH
ANT
LNA_IN
VDD3P3
XTAL_32K_P
XTAL_32K_N
GPIO2
CHIP_EN
GPIO3
SPIQ
SPID
SPICLK
SPICS0
SPIWP
SPIHD
VDD_SPI
VDD3P3_CPU
C17 100nF
C18 4.7uF
R25 10kΩ
R26 330Ω
LED1
C23 100nF
U1
40MHz
C27 15pF
C34 15pF
ANT1
C25 1.5pF
L2 2nH
C31 1.5pF
A4988-X
IC1 A4988SETTR-T
R9
R12
R16 1.5kΩ
R18 20kΩ
R21 10kΩ
C13 220uF
C14 100nF
FPC1
A4988-Y
IC4 A4988SETTR-T
R27
R28
R32 1.5kΩ
R34 20kΩ
R38 10kΩ
C36 220uF
C37 100nF
FPC2
BOOST
IC5 TPS61088RHLR
R41 220kΩ
R43 1MΩ
R36 20kΩ
C15 22uF
C19 100nF
C16 33pF
C20 680pF
R52 33kΩ
R46 82kΩ
R24 100kΩ
C28 8.2nF
C29 100nF
C30 22uF
C32 100nF
L3 1uH
R23 51kΩ
R22 200kΩ
C33 1uF
CHARGE
IC6 TP5100
R39 200mΩ
R40 1kΩ
LED3
LED2
L5 10uH
R47 200mΩ
R50 200mΩ
R56 200mΩ
D2
R51 47kΩ
LDO
LED5
R55 330Ω
IC7 AMS1117-5.0_C6187
IC8 AMS1117-3.3_C6186
C49 22uF
C38 22uF
POWER IN
R42 100kΩ
R48 220kΩ
R49 82kΩ
SW1
OUTPUT
CN3
CN1
MOS2
R44 100Ω
R45 10kΩ